xylem
Let's Solve Water

INSTRUCTION MANUAL

P6016605

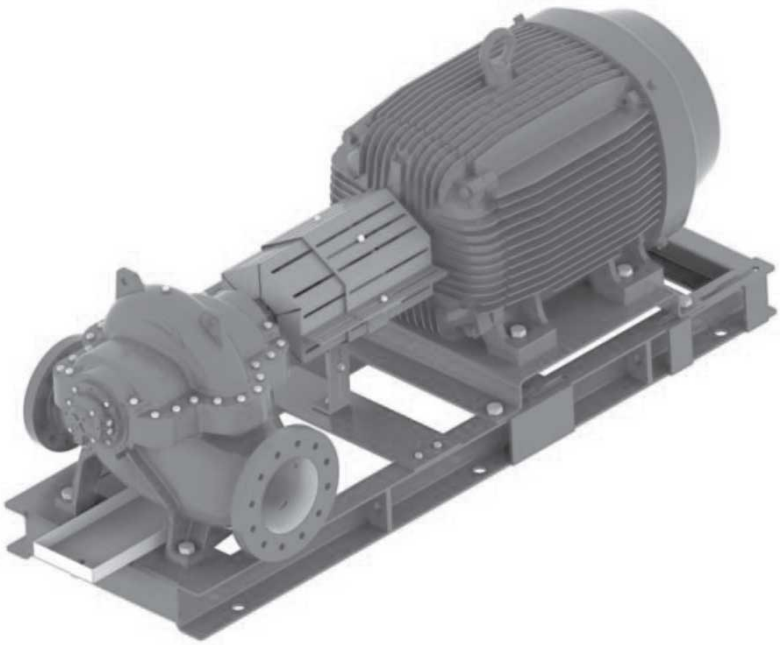

# Series e-HSC

## Double Suction Centrifugal Pumps

Bell & Gossett
a xylem brand

# Table of Contents

# 1 Introduction and Safety

## 1.1 Introduction

### Purpose of this manual

The purpose of this manual is to provide necessary information for:

- Installation
- Operation
- Maintenance

CAUTION:

Read this manual carefully before installing and using the product. Improper use of the product can cause personal injury and damage to property, and may void the warranty.

NOTICE:

Save this manual for future reference, and keep it readily available at the location of the unit.

## 1.2 Safety

WARNING:

- The operator must be aware of safety precautions to prevent physical injury.
- Operating, installing, or maintaining the unit in any way that is not covered in this manual could cause death, serious personal injury, or damage to the equipment. This includes any modification to the equipment or use of parts not provided by Xylem. If there is a question regarding the intended use of the equipment, please contact a Xylem representative before proceeding.
- Do not change the service application without the approval of an authorized Xylem representative.

CAUTION:

You must observe the instructions contained in this manual. Failure to do so could result in physical injury, damage, or delays.

### 1.2.1 Safety terminology and symbols

#### About safety messages

It is extremely important that you read, understand, and follow the safety messages and regulations carefully before handling the product. They are published to help prevent these hazards:

- Personal accidents and health problems
- Damage to the product and its surroundings
- Product malfunction

#### Hazard levels

| Hazard level | Indication |
|---|---|
| DANGER: | A hazardous situation which, if not avoided, will result in death or serious injury |

| Hazard level | | Indication |
|---|---|---|
| | WARNING: | A hazardous situation which, if not avoided, could result in death or serious injury |
| | CAUTION: | A hazardous situation which, if not avoided, could result in minor or moderate injury |
| NOTICE: | | Notices are used when there is a risk of equipment damage or decreased performance, but not personal injury. |

### Special symbols

Some hazard categories have specific symbols, as shown in the following table.

| Electrical hazard | | Magnetic fields hazard | |
|---|---|---|---|
| | Electrical Hazard: | | CAUTION: |

## 1.2.2 Safety instruction decals

### Alert symbol

| | |
|---|---|
| | This safety alert symbol is used in manuals and on the safety instruction decals on the pump to draw attention to safety-related instructions.<br>When used, the safety alert symbol means that failure to follow the instructions may result in a safety hazard. |

### Decals

Make sure your pump has these safety instruction decals and that they are located as this figure shows. If the decals are missing or illegible, contact your local sales and service representative for a replacement.

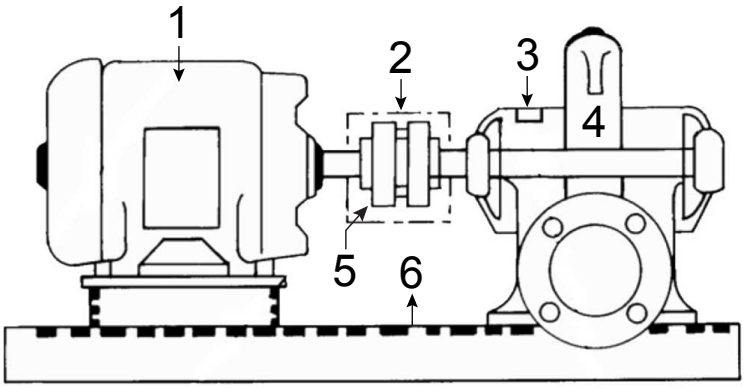


1. WARNING. Eyebolts or lifting lugs if provided are for lifting only the components to which they are attached. Failure to follow instructions could result in injury or death.
2. WARNING. ROTATING COMPONENTS. Disconnect and lockout power before servicing. Do not operate without all guards in place. Consult installation and service instruction sheet before operating or servicing.
3. CAUTION. Do not run pump dry. Seal damage may occur. Inspect pump seal regularly for leaks. Replace as required. Lubrication requirements consult manuals. Pump:

Polyurea-based grease. Failure to follow instructions could result in injury or property damage.

4. Nameplate location. See *Nameplate rating information* on page 11 for more information.
5. CAUTION. Coupler alignment is required! level and grout pump before use. Check alignment before grouting, after system is filled, after servicing pump, and as required. Consult the service instructions for details. Failure to follow these instructions could result in injury or property damage.
6. CAUTION. NO STEP. This equipment is not to be used as a step. Failure to follow instructions could result in injury or property damage.
7. PROPOSITION 65. This product contains components made of materials that are known to the State of California to cause cancer, birth defects, and other reproductive harm.

NOTE: The Proposition 65 label should accompany the container this IOM arrives in and will not be placed directly onto the pump.

Make sure that all safety instruction decals are always clearly visible and readable.

## 1.3 User safety

### General safety rules

These safety rules apply:

- Always keep the work area clean.
- Pay attention to the risks presented by gas and vapors in the work area.
- Avoid all electrical dangers. Pay attention to the risks of electric shock or arc flash hazards.
- Always bear in mind the risk of drowning, electrical accidents, and burn injuries.

### Safety equipment

Use safety equipment according to the company regulations. Use this safety equipment within the work area:

- Hard hat
- Safety goggles, preferably with side shields
- Protective shoes
- Protective gloves
- Gas mask
- Hearing protection
- First-aid kit
- Safety devices

NOTICE:

Never operate a unit unless safety devices are installed. Also see specific information about safety devices in other chapters of this manual.

### Electrical connections

Electrical connections must be made by certified electricians in compliance with all international, national, state, and local regulations. For more information about requirements, see sections dealing specifically with electrical connections.

### Precautions before work

Observe these safety precautions before you work with the product or are in connection with the product:

- Provide a suitable barrier around the work area, for example, a guard rail.
- Make sure that all safety guards are in place and secure.
- Make sure that you have a clear path of retreat.

- Make sure that the product cannot roll or fall over and injure people or damage property.
- Make sure that the lifting equipment is in good condition.
- Use a lifting harness, a safety line, and a breathing device as required.
- Allow all system and pump components to cool before you handle them.
- Make sure that the product has been thoroughly cleaned.
- Disconnect and lock out power before you service the pump.
- Check the explosion risk before you weld or use electric hand tools.

**Precautions during work**

Observe these safety precautions when you work with the product or are in connection with the product:

- Never work alone.
- Always wear protective clothing and hand protection.
- Stay clear of suspended loads.
- Always lift the product by its lifting device.
- Beware of the risk of a sudden start if the product is used with an automatic level control.
- Beware of the starting jerk, which can be powerful.
- Rinse the components in water after you disassemble the pump.
- Do not exceed the maximum working pressure of the pump.
- Do not open any vent or drain valve or remove any plugs while the system is pressurized. Make sure that the pump is isolated from the system and that pressure is relieved before you disassemble the pump, remove plugs, or disconnect piping.
- Never operate a pump without a properly installed coupling guard.

### 1.3.1 Wash the skin and eyes

Follow these procedures for chemicals or hazardous fluids that have come into contact with your eyes or your skin:

| Condition | Action |
|---|---|
| Chemicals or hazardous fluids in eyes | 1. Hold your eyelids apart forcibly with your fingers.<br>2. Rinse the eyes with eyewash or running water for at least 15 minutes.<br>3. Seek medical attention. |
| Chemicals or hazardous fluids on skin | 1. Remove contaminated clothing.<br>2. Wash the skin with soap and water for at least 1 minute.<br>3. Seek medical attention, if necessary. |

## 1.4 Protecting the environment

**Emissions and waste disposal**

Observe the local regulations and codes regarding:

- Reporting of emissions to the appropriate authorities
- Sorting, recycling and disposal of solid or liquid waste
- Clean-up of spills

**Exceptional sites**

CAUTION: Radiation Hazard

Do NOT send the product to Xylem if it has been exposed to nuclear radiation, unless Xylem has been informed and appropriate actions have been agreed upon.

**Recycling guidelines**

Always follow local laws and regulations regarding recycling.

# 2 Transportation and Storage

## 2.1 Examine the delivery

### 2.1.1 Examine the package

1. Examine the package for damaged or missing items upon delivery.
2. Record any damaged or missing items on the receipt and freight bill.
3. If anything is out of order, then file a claim with the shipping company.

   If the product has been picked up at a distributor, make a claim directly to the distributor.

### 2.1.2 Examine the unit

1. Remove packing materials from the product.

   Dispose of all packing materials in accordance with local regulations.
2. To determine whether any parts have been damaged or are missing, examine the product.
3. If applicable, unfasten the product by removing any screws, bolts, or straps.

   Use care around nails and straps.
4. If there is any issue, then contact a sales representative.

## 2.2 Pump lifting guidelines

WARNING:

Only use the attached eyebolts or lifting lugs to lift the components to which they are attached. Failure to do so could result in death or serious injury.

CAUTION:

Some pump, base, and driver assemblies are not safe to lift as a complete assembly. Damage to the baseplate can occur if you attempt this. If the driver was mounted on the baseplate at the factory, it is safe to lift the entire assembly. If the driver was not mounted at the factory, do not lift the entire assembly which consists of the pump, base, and driver. Instead, lift the pump and baseplate to its final location without the driver. Then, mount the driver.

The pump unit should be unloaded and handled by lifting equally at four or more points on the baseplate. Lift the pump equally at four or more points on the baseplate. Care must be taken to size the equipment for unbalanced loads that can exist if the motor is not mounted on the base when you lift it. The lugs on the upper half casing are designed for lifting the upper half casing only and not for upper casing and lower casing assembly. Eyebolts located on either bearing housing are designed for lifting the bearing housing only and not for the upper and lower casing assembly.

WARNING:

Eyebolts or lifting lugs, if provided, are for lifting only the components to which they are attached. Failure to follow these instructions could results in serious personal injury or death, or property damage.

**Horizontal bare pump lifting procedure**

- Using a nylon sling, chain, or wire rope, hitch around both bearing supports.

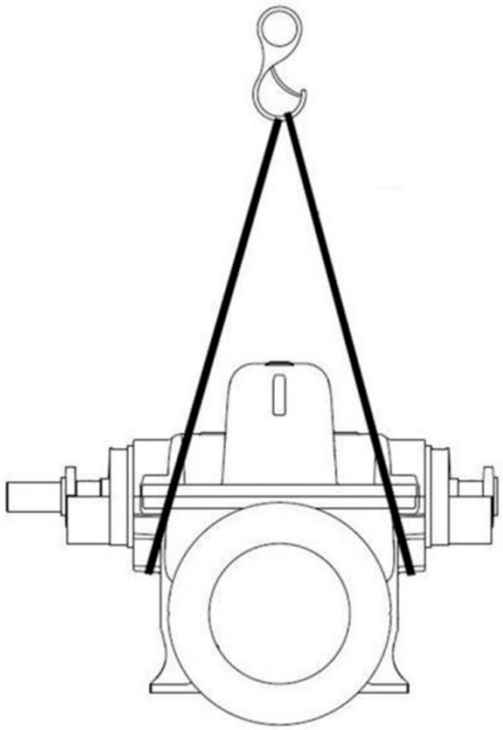

Figure 1: Sample lifting diagram

Note:

Do not lift the whole pump by the lifting lugs. The lifting lugs are meant solely for the purpose of lifting the upper casing. Attempting to lift the entire pump by the lifting lugs could lead to property damage.

### Pump, base, and driver lifting procedure for bases with lifting holes

1. Using ANSI/OSHA Standard "S" hooks, place the "S" hooks in the holes provided in the four corners of the base. Be sure the points of the hooks do not touch the bottom of the pump base.
2. Attach nylon slings, chains, or wire rope to the "S" hooks. Size the equipment for the load and ensure the lift angle will be less than 45° from the vertical.

### Pump, base, and driver lifting procedure for bases without lifting holes

1. Place one sling around the outboard bearing housing.
2. Place the remaining sling around the back end of the motor as close to the mounting feet as possible. Make sure the sling does not damage the housing cover or conduit box.
3. Join the free ends of the slings together and place over the lifting hook. Use extreme care when positioning sling under the motor so it cannot slip off.

Notes:

- Care must be taken to size equipment for unbalanced loads which may exist if the motor is not mounted on the base at the time of lifting. Motor may or may not be mounted at the factory.
- Pump, base, and driver assemblies where the base length exceeds 100 in. (2540 mm) may not be safe to lift as a complete assembly. Damage to the baseplate may occur.
- If the driver has been mounted on the baseplate at the factory, it is safe to lift the entire assembly.
- If driver has not been mounted at the factory and the overall baseplate lengths exceed 100 in. (2540 mm), do not lift the entire assembly consisting of pump, base, and driver.

Instead, lift the pump and baseplate to its final location without the driver. Then mount the driver.

- Bases are supplied with lifting holes; large bases are supplied with lifting holes in the sides or the ends of the base.

## 2.3 Pump storage requirements

Storage requirements depend on the amount of time that you store the unit. The normal packaging is designed only to protect the unit during shipping.

| Length of time in storage | Storage requirements |
|---|---|
| Upon receipt/short-term (less than six months) | • Store in a covered and dry location.<br>• Store the unit free from dirt and vibrations. |
| Long-term (more than six months) | • Store in a covered and dry location.<br>• Store the unit free from heat, dirt, and vibrations.<br>• Rotate the shaft by hand several times at least every three months.<br>• Make sure that any changes in ambient temperature are slow and moderate. |

Treat bearing and machined surfaces so that they are well preserved. Refer to drive unit and coupling manufacturers for their long-term storage procedures.

# 3 Product Description

## 3.1 General description

### Description

The pump is a centrifugal, frame-mounted pump. The following pump features make it easy to install, operate, and service:

- A high efficiency and rugged construction
- Compact design
- Single stage, axially split volute
- Self-flushed mechanical seals, no need for external flush lines
- Easily serviced seals and bearings – without removing upper casing
- Horizontal mounting only
- Quick replacement of bearings

### Intended applications

WARNING:

This product can expose you to chemicals including Lead, which is known to the State of California to cause cancer and birth defects or other reproductive harm. For more information go to: www.P65Warnings.ca.gov.

Certain components of the e-HSC product line may contain trace amounts of lead. As such, the product will be labeled according to California Proposition 65.

This pump has a stainless steel construction that makes it ideal for hydronic cooling or heating, pressure boosting, and general pumping with these liquids:

- Unheated domestic and fresh water
- Boiler-feed water
- Condensate
- Benign liquids

## 3.2 Operational limits

### Maximum suction pressures

The pump suction pressure plus the pump head cannot exceed the maximum suction pressure. Mechanical seals are rated for a maximum working pressure of:

- MR1: 580 PSI [40 bar]
- MR2: 175 PSI [12 bar]

NOTE: Seal pressure varies with size, material configuration and operating temperature conditions. Refer to the Performance and Technical Data Manual for more information on mechanical seal operating ranges.

### Seal operating limits

CAUTION:

In order to prevent premature seal failure or possible injury, do not use rubber bellows (MR2 type) seals as an alternate or substitute for the balanced (MR1 type) seals installed in a high-suction pressure-rated e-HSC pump. Failure to follow these instructions can result in serious property damage and/or moderate personal injury.

| Sealing method | When to use |
|---|---|
| Mechanical seals | Use on closed or open systems that are relatively free of dirt and/or other abrasive particles. |

| Seal | Material | Temperature range | pH range |
|---|---|---|---|
| Mechanical | Carbon/Silicon Carbide | <250°F (120°C) | 4 to 10 |
| Mechanical | Silicon Carbide/Silicon Carbide | Depends on elastomer selected | 4 to 11 |
| Mechanical | EPDM, Sulphur Cured – Standard Elastomer | <248°F (120°C) | See note 1 |
| Mechanical | EPDM, Peroxide Cured | <275°F (135°C) | See note 1 |
| Mechanical | FKM | See note 2 | See note 1 |
| Mechanical | NBR | <175°F (80°C) | See note 1 |

Note 1: Corrosion resistance depends on chemical substance(s) in contact with material.

Note 2: FKM can be used up to 300°F (150°C), but in water applications, EPDM would be a better choice. The suggested temperature for FKM in a water application is up to 194°F (90°C).

## 3.3 Nameplate rating information

These pumps are designated by a series of numbers such as Series e-HSC. The pump nameplate gives identification and rating information.

Permanent records for this pump are referenced by the serial number. This number must be used with all correspondence and spare parts orders.

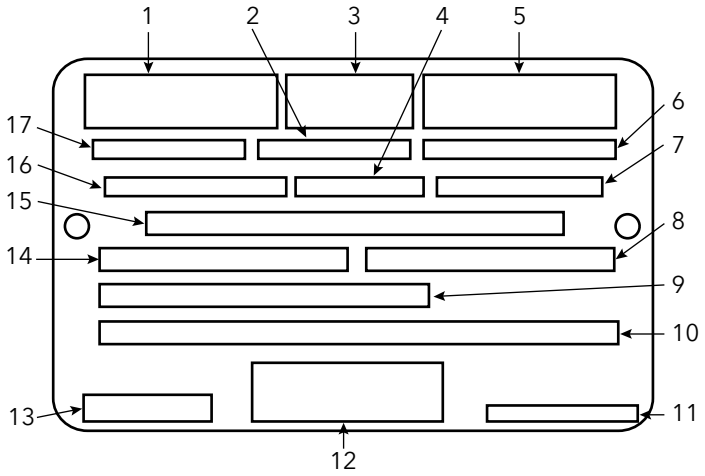


Figure 2: Rating plate

Legend

1. Xylem brand logo (i.e. B&G, GWT, Lowara, Flygt)
2. Pump size (i.e. C150-355 or C6X8X13.5)
3. NSF-61 or NSF-372 (if applicable)
4. Total head (i.e. 36m or 118ft)
5. Manufacturing location (i.e. Morton Grove)
6. Pump rotation (clockwise or counterclockwise)
7. Required motor power (i.e. 45kW or 60HP)
8. Impeller diameter (i.e. 355mm or 14")
9. Serial number
10. Blank space for customer information
11. Nameplate part number
12. Assembled in USA
13. Manufacturing month and year (i.e. 2019)
14. Operating speed (i.e. 1470RPM or 1780RPM)

15. Max working pressure (i.e. 16bar / 230PSI)
16. Flow (i.e. 365 $m^3$/H or 1600GPM)
17. Pump series (e-HSC)

# 4 Installation

## 4.1 Preinstallation

Precautions

WARNING:

- When installing in a potentially explosive environment, make sure that the motor is properly certified.
- You must ground (earth) all electrical equipment. This applies to the pump equipment, the driver, and any monitoring equipment. Test the ground (earth) lead to verify that it is connected correctly.

NOTICE:

Supervision by an authorized Xylem sales representative/dealer is recommended to ensure proper installation. Failure to do so may result in equipment damage or decreased performance.

Evaluate the installation in order to determine that the Net Positive Suction Head Available ($NPSH_A$) meets or exceeds the Net Positive Suction Head Required ($NPSH_R$), as stated by the pump performance curve.

### 4.1.1 Pump location guidelines

WARNING:

Assembled units and their components are heavy. Failure to properly lift and support this equipment can result in serious physical injury and/or equipment damage. Lift equipment only at the specifically identified lifting points. Lifting devices such as eyebolts, slings, and spreaders must be rated, selected, and used for the entire load being lifted.

| Guideline | Explanation/comment |
|---|---|
| Keep the pump as close to the liquid source as practically possible. | This minimizes the friction loss and keeps the suction piping as short as possible. |
| Make sure that the space around the pump is sufficient. | This facilitates ventilation, inspection, maintenance, and service. |
| If you require lifting equipment such as a hoist or tackle, make sure that there is enough space above the pump. | This makes it easier to properly use the lifting equipment and safely remove and relocate the components to a safe location. |
| Protect the unit from weather and water damage due to rain, flooding, and freezing temperatures. | This is applicable if nothing else is specified. |
| Do not install and operate the equipment in closed systems unless the system is constructed with properly-sized safety devices and control devices. | Acceptable devices:<br>• Pressure relief valves<br>• Compression tanks<br>• Pressure controls<br>• Temperature controls<br>• Flow controls<br>If the system does not include these devices, consult the engineer or architect in charge before you operate the pump. |
| Take into consideration the occurrence of unwanted noise and vibration. | The best pump location for noise and vibration absorption is on a concrete floor with subsoil underneath. |
| If the pump location is overhead, undertake special precautions to reduce possible noise transmission. | Consider a consultation with a noise specialist. |

| Guideline | Explanation/comment |
|---|---|
| When possible, locate the pump below the fluid level. | This facilitates priming, ensures a steady flow of liquid, and provides a positive suction head on the pump. |

## 4.1.2 Typical installation

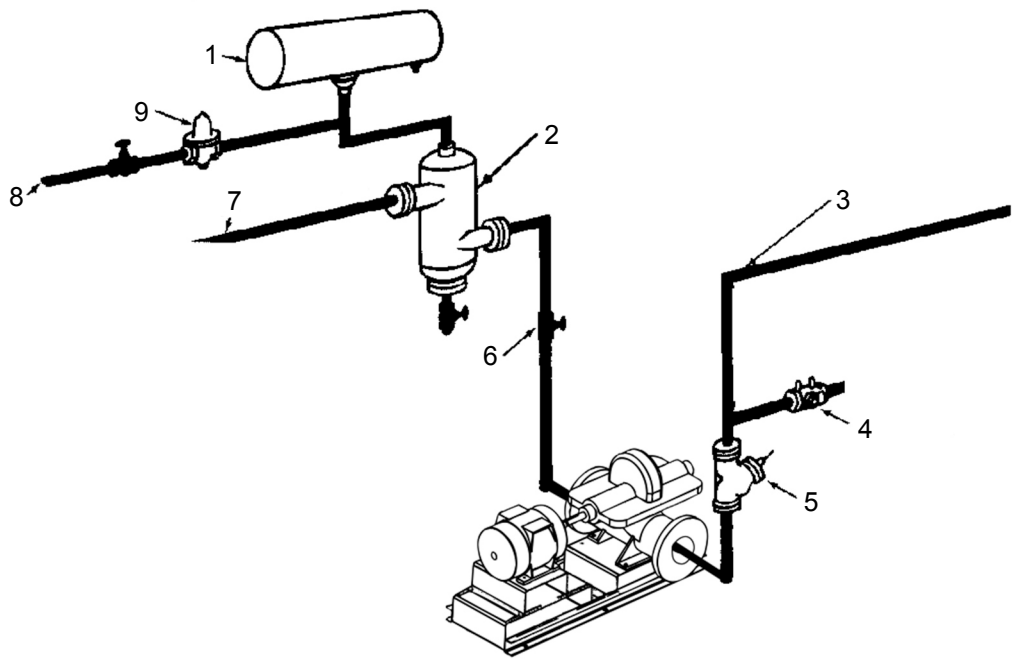


1. Compression tank (locate the compression tank on the suction side of the pump)
2. Air separator
3. Supply to system
4. Circuit setter
5. Triple duty valve
6. Isolation valve
7. From boiler chiller or converter
8. Cold water supply
9. Reducing valve

## 4.1.3 Foundation requirements

### Pump foundation

- A substantial foundation and footing should be built to suit local conditions and form a rigid support to maintain alignment.
- The foundation must be able to absorb any type of vibration and form a permanent, rigid support for the unit.
- If the foundation is installed over the floor, it must be properly bonded and tied to the floor.

### Foundation recommendations for 300 hp [220 kW] and smaller pumps and motors

- Floor weight can be included in the Pump Foundation weight calculation within the boundary of the Pump Foundation if properly attached/bonded to the floor. Base plate grouting weight can also be included in the pump foundation weight.
- Pump Foundations should extend 3″ (76 mm) or more from pump base plate edges.
- The Pump Foundation width should include sufficient width to cover a 30 degree rule.
- Pump Foundation construction minimum requirements: 3000 psi (200 bar) concrete with steel re-enforcement.
- Pump Foundations should be a min of 1″ (25 mm) above the floor to prevent water collection around the pump base plate.

### Foundation recommendations for 300 hp [220 kW] and larger pumps and motors

- Floor weight can be included in the Pump Foundation weight calculation within the boundary of the Pump Foundation if properly attached/bonded to the floor. Base plate grouting weight can also be included in the pump foundation weight.
- Pump Foundations should extend 6″ (152 mm) or more from pump base plate edges.
- Pump Foundation width should include sufficient width to cover a 30 degree rule.
- Pump Foundation construction minimum requirements: 3000 psi (200 bar) concrete with steel re-enforcement.
- Multiple Larger Pumps on a common Pump Foundation is not a recommended practice due to machine vibration from the operating unit possibly damaging the idle units.
- Pump Foundations should be a min of 1″ (25 mm) above the floor to prevent water collection around the pump base plate.

### Pump Foundation Width 30° Rule

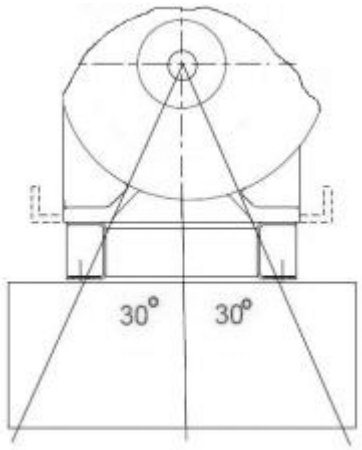


Figure 3: 30° Rule

The width of the pump foundation should be wider than the extended 30° lines.

When viewing the pump from the end of the base plate establish a vertical line through the pump shaft center. On both sides of this vertical line a line that starts at the pump shaft center and extends downward at 30°. These lines must pass through the bottom of the foundation.

### Pumps on Spring Isolation Bases

- Spring mounting isolates the vibration from a pump from the floor or the foundation it is mounted on. Spring mounting can absorb piping loads from thermal expansion or reactions to internal pressure for properly supported piping systems. Be sure to anchor the piping before mounting to the pump.
- The pump unit can be installed on a spring isolated base. The spring isolators are not to be installed directly to the pump base plate given. The entire unit must be put on an isolation base that has the spring mounts attached to it. These isolation bases are welded structural steel with reinforcing and are filled with concrete or grout. The design requirements and installation of these isolation bases are the responsibility of the installing contractor.
- Use flexible piping on both suction and discharge sides with an isolation base. Flexible piping decreases the strain on the flanges.

## Piping schematic

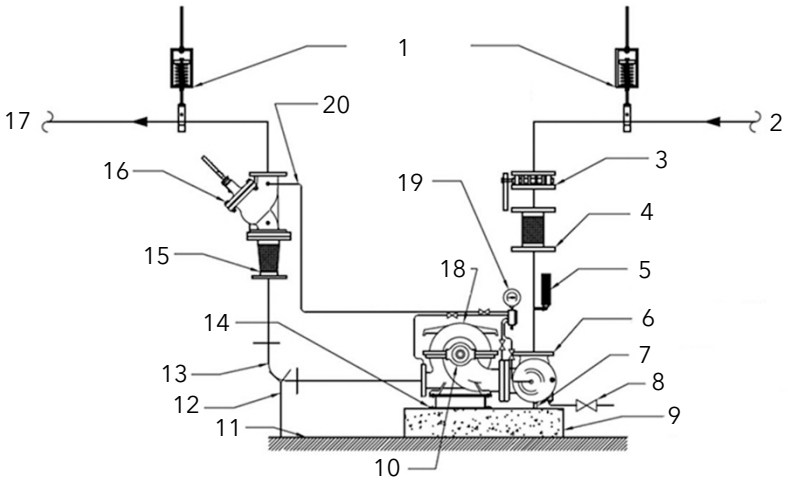


Figure 4: Horizontal split case pump detail, base mounted on a housekeeping pad

1. Pipe hangers
2. From system
3. Isolation valve
4. Stainless steel braided connector
5. 9″ industrial thermometer with 3/4″ NPT copper well
6. Suction diffuser with strainer
7. Field fabricated support leg
8. Drain: terminate near floor drain
9. 3″ high concrete housekeeping pad
10. Easy maintenance access panels
11. Finish floor
12. Pipe support
13. Long radius elbow
14. Groutable fabricated steel base plate
15. Stainless steel braided connector (increaser where required)
16. Triple duty valve (sized for 1 to 3 psi P.D. at the design flow rate)
17. To system
18. Base-mounted horizontal split case pump
19. Multiport pressure indicator (4–port)
20. 1/4″ O.D. copper tubing with compression fittings

## Anchor bolts

- Foundation bolts or anchors of the proper size and type must be used. Foundation bolts that are cast in place can be of either type shown in pump detail figure. Concrete anchors can also be used. The type selected must be consistent with local codes.
- The size of the foundation bolts or anchor should be 1/8″ (3 mm) smaller diameter than the holes provided in the base plate. Refer to the pump submittal for the quantity and size.

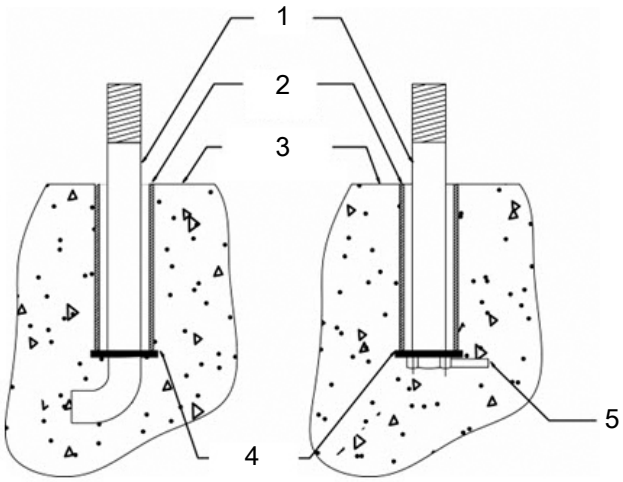


1. Foundation bolt
2. Pipe sleeve
3. Concrete foundation
4. Washer
5. Lug

Anchor bolt and hole sizes

- As a rule, the diameter of the anchor bolt hole should be 0.125 in (3 mm) larger than the diameter of the anchor bolt.

### 4.1.4 Requirements for setting the baseplate

CAUTION:

- Use an anchor bolt and a plain, flat, type-W washer at each anchor bolt hole. Otherwise, the pump unit can shift. Failure to follow these instructions can result in serious property damage and/or moderate personal injury.
- It is very important that the pump base is set level in order to avoid any mechanical difficulties with the motor or pump. If furnished with a motor, this pump was properly aligned at the factory. However, since all pump bases are flexible, they can spring and twist during shipment.

Base Plate Setting

Place the pump unit on its concrete foundation, supporting it with steel wedges or shims. The wedges or shims should be machined and be put on both sides of each anchor bolt to provide a means for leveling the base. The wedge or shim length should be equal to or greater than the base rail width. The width of the wedge or shim should be at least four times the diameter of the anchor bolt. It is acceptable to place additional shims between the existing anchor bolts. Use an anchor bolt for each anchor bolt hole provided.

CAUTION:

Equipment Damage. Use an anchor bolt and flat washer at each anchor bolt hole. Otherwise, shifting of the pump unit may occur. Failure to follow these instructions could result in serious property damage and/or moderate personal injury. It is very important that the pump base be set level to avoid any mechanical difficulties with the motor or pump. This pump was properly aligned (if furnished with a motor) at the factory. However, since all pump bases are flexible, they may spring and twist during shipment. Do not pipe the pump until it is realigned. After piping is completed and after the pump is installed and bolted down, align it again. It may be necessary to re-adjust the alignment from time to time while the unit and foundation are new.

This pump is available in both clockwise and counterclockwise rotation. An arrow cast into the pump body shows the direction of rotation.

### Foundation checklist

You must fulfill these requirements before the foundation is ready for pump installation:

- Place the pump unit on its concrete foundation and support it with steel wedges or shims.
- Machine the wedges or shims and then place them on both sides of each anchor bolt in order to provide a means to level the base.
- Make sure that the wedge or shim width is equal to or greater than the base rail width.
- Make sure that the length of the wedge or shim is at least four times the diameter of the anchor bolt.
- You can place additional shims between the existing anchor bolts. Use an anchor bolt for each anchor bolt hole provided and use plain, flat type-W washers with each anchor bolt.

### Baseplate checklist

You must fulfill these requirements before the baseplate is ready for pump installation:

- Set the baseplate on the foundation and level it using shims under each rail mounting hole.
- Make sure that the size of the shims is equal to or greater than the rail width.
- Make sure that the length of the shim is at least four times the diameter of the rail mounting bolt.
- Make sure that the shim thickness is at least 0.06 in. (1.52 mm) thick. If the base is grouted then the shims need to be thicker.
- Make sure that the base is anchored to the foundation with bolts in all rail foundation holes. Optionally, you can place shims under the rail between the rail mounting bolts.

### Piping check

Do not pipe the pump until it is realigned.

After piping is completed and after the pump is installed and bolted down, align it again. You might need to re-adjust the alignment on a few occasions while the unit and foundation are new.

### Grouting

Grout the baseplate after the pump unit has been leveled, securely bolted to the floor, and properly aligned. Use a high precision non-shrinking grout inside the pump baseplate.

## 4.2 Level the base on a concrete foundation

Place 1.00 in./(25.40 mm) thick steel shims or wedges on both sides of each anchor bolt in order to support the pump .

This also provides a means of leveling the base.

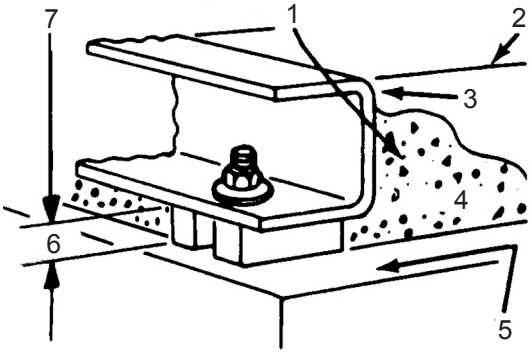


1. Locate the shims to allow removal after grouting.
2. Grout only to top of base rail
3. Pump base rail
4. Grout
5. Concrete foundation

6. 1" (25.40 mm) Gap
7. Allow 1" for shims. Place on both sides of anchor bolts.

## 4.3 Coupling alignment

**WARNING:**

Always disconnect and lock out power to the driver before you perform any installation or maintenance tasks. Failure to disconnect and lock out driver power will result in serious physical injury.

### Alignment guidelines

Follow these guidelines when you align the coupling:

- Only perform alignment by moving or shimming the motor.
- Since adjustments in one direction can alter the alignment in another direction, check the alignment in all directions after you make a correction.
- Make sure that the pump and motor bolts are tight when you take all measurements.
- Perform a final alignment check after the unit reaches its final operating temperature.

### 4.3.1 Prepare for alignment

The standard coupling selection for e-XC pumps are TB Wood's® Dura-Flex® non-spacer elastomeric couplings and Falk® Steelflex® Type T10 close-coupled grid couplings. For other coupling types or brands, refer to the coupling manufacturer's installation instructions and alignment data. Always consult the coupling manufacturer's installation manual for detailed instructions and the most up-to-date service information.

1. Check the pump and motor shafts and remove any paint, burrs, and rust.
2. Slide the hubs and bushings on the shafts with keys.
3. Hold one half element on the hubs in order to determine the appropriate hub spacing.
4. If you use spacer elements with high speed rings, hold both half elements on the hubs in order to make sure the hubs do not interfere with the rings.
5. You can install the hubs with the hub extension facing in or out. Make sure the shaft extends into the hubs at least 0.8 times the diameter of the shaft.
6. Lightly fasten the hubs to the shafts in order to prevent them from moving during alignment.
7. Align the hubs to the values shown in 'Maximum allowable coupling misalignment'. Alignment may be performed with lasers, dial indicators, or with a straight edge and calipers.

### 4.3.2 Align the pump using a straight edge and calipers

1. Check the angular misalignment:

| Tool | Procedure |
|---|---|
| Calipers | 1. Gauge the distance between the two hubs at various points around the circumference. Do not rotate the shafts.<br>2. Reposition the equipment until the difference between the minimum and maximum distance values is within the permissible range. |
| Feeler gauges | 1. Insert feeler gauges between the coupling faces at various points around the circumference. Do not rotate the shafts.<br>2. Reposition the equipment until the difference between the minimum and maximum distance values is within the permissible range. |

2. Check the parallel alignment:
   a) Place a straight edge across the two hubs.
   b) Measure the maximum offset at various points around the periphery of the hubs. Do not rotate the shafts.
   c) Reposition the equipment until the offset is within the permissible range.

The following figure demonstrates an acceptable alignment where both the parallel and angular alignments are correct.

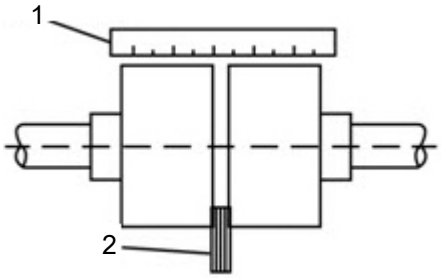


1. Straight edge
2. Feeler gauge

**Figure 5: Check the alignment using a straight edge - correct**

The following figure demonstrates a poor alignment where both parallel and angular alignments do not fall within the allowable misalignment specifications.

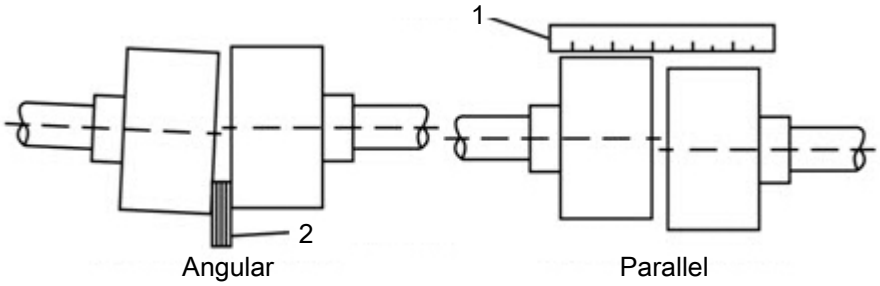


1. Straight edge
2. Feeler gauge

**Figure 6: Check the alignment using a straight edge - incorrect**

The following figure demonstrates how to measure angular misalignment using calipers. The angle between the two arrows is the degree of angular misalignment between the hubs. The difference between measurements L1 and L2 correlates to the degree of misalignment.

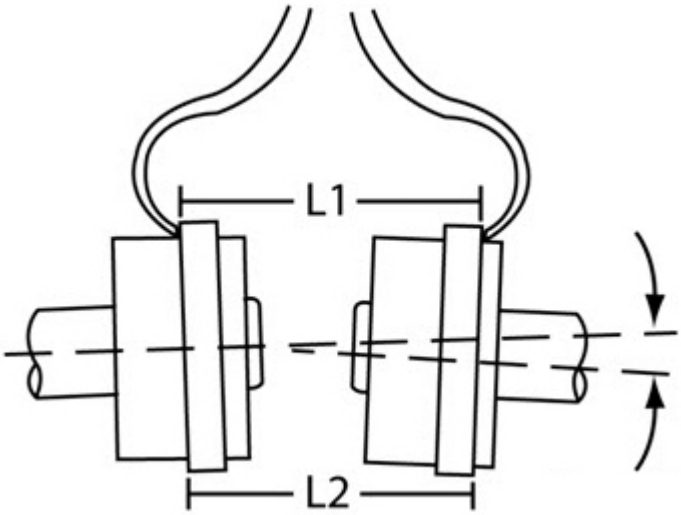


**Figure 7: Check the alignment using calipers**

### 4.3.3 Align the pump using a dial indicator

1. Check the angular misalignment:
   a) Mount the dial indicator base to one coupling half, or shaft.
   b) Position the dial indicator button on the front face or rear face of the opposite coupling half.
   c) Mark the index lines on the coupling halves as the following Figure shows:

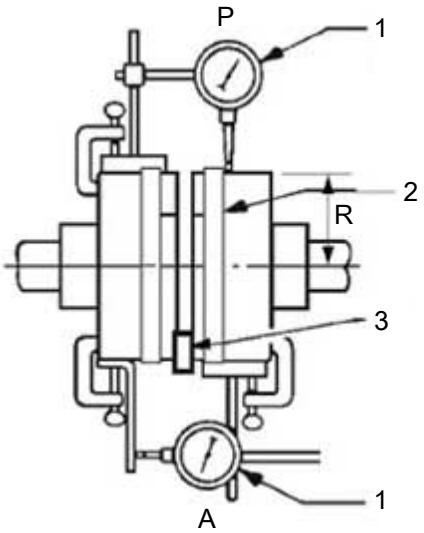


| | |
|---|---|
| A | Angular alignment |
| P | Parallel alignment |
| 1 | Dial indicators |
| 2 | Index line |
| 3 | Resilient separator |

Figure 8: Pump alignment via dial indicator

   d) Set the dial to zero.
   e) Rotate both coupling halves together and make sure that the index lines remain matched.
   f) Reposition the equipment until the offset is within the permissible value.
2. Check the parallel misalignment:
   a) Mount the dial indicator base to one coupling half, or shaft.
   b) Position the dial indicator button on the outside diameter of the opposite coupling half.
   c) Set the dial to zero.
   d) Rotate both coupling halves together and make sure that the index lines remain matched.
   e) Reposition the equipment until the offset is within the permissible value.

### 4.3.4 Maximum allowable coupling misalignment

**TB Wood's® Dura-Flex® Couplings**

TB Wood's® Dura-Flex® elastomeric coupling alignment guidelines shown are also listed in the coupling service manual published by TB Wood's®. Refer to the service manual for more detailed information regarding fastener torque values, detailed installation instructions, and more.

The following figure defines the allowable parallel gap for a given degree of angular misalignment.

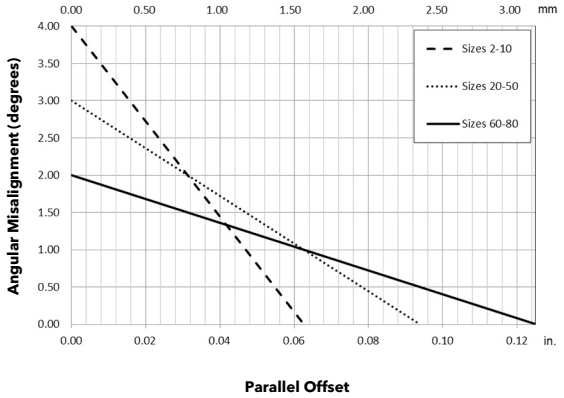


Figure 9: Acceptable parallel offset for TB Wood's® Dura-Flex® elastomeric couplings

The following table relates the difference in measurement of the L1 and L2 dimensions shown in Figure 6 of section 4.3.2 to the degree of angular misalignment between coupling hubs.

Table 1: Allowable angular misalignment gap

| Hub Size | 1° angular misalignment | 2° angular misalignment | 3° angular misalignment | 4° angular misalignment |
|---|---|---|---|---|
| | in. (mm) | in. (mm) | in. (mm) | in. (mm) |
| WE2 | 0.03 (0.8) | 0.07 (1.7) | 0.10 (2.5) | 0.13 (3.3) |
| WE3 | 0.04 (1.0) | 0.08 (2.1) | 0.12 (3.1) | 0.16 (4.1) |
| WE4 | 0.05 (1.1) | 0.09 (2.3) | 0.14 (3.5) | 0.18 (4.6) |
| WE5 | 0.06 (1.4) | 0.11 (2.8) | 0.16 (4.2) | 0.22 (5.5) |
| WE10 | 0.06 (1.6) | 0.13 (3.2) | 0.19 (4.9) | 0.22 (5.5) |
| WE20 | 0.08 (2.0) | 0.16 (4.0) | 0.23 (5.9) | N/A |
| WE30 | 0.10 (2.4) | 0.19 (4.8) | 0.28 (7.2) | N/A |
| WE40 | 0.12 (2.9) | 0.23 (5.9) | 0.35 (8.8) | N/A |
| WE50 | 0.14 (3.6) | 0.28 (7.2) | 0.43 (10.8) | N/A |
| WE60 | 0.15 (3.9) | 0.31 (7.7) | N/A | N/A |
| WE70 | 0.16 (4.1) | 0.32 (8.2) | N/A | N/A |
| WE80 | 0.20 (5.0) | 0.39 (10.0) | N/A | N/A |

## Falk® Steelflex® Couplings

Falk® Steelflex® T10 grid coupling alignment guidelines shown are also listed in the coupling service manual published by Rexnord Falk®. Refer to the service manual for more detailed information regarding coupling lubrication, fastener torque values, detailed installation instructions, and more.

The following table shows both parallel and angular misalignment data as recommended by the coupling manufacturer.

Table 2: Maximum parallel and angular misalignment offsets for Falk® Steelflex® T10 couplings

| Hub Size | Parallel Offset | Angular Offset |
|---|---|---|
| | in. (mm) | in. (mm) |
| 1020T | 0.006 (0.15) | 0.003 (0.08) |
| 1030T | 0.006 (0.15) | 0.003 (0.08) |
| 1040T | 0.006 (0.15) | 0.003 (0.08) |
| 1050T | 0.008 (0.20) | 0.004 (0.10) |

| Hub Size | Parallel Offset | Angular Offset |
|---|---|---|
| | in. (mm) | in. (mm) |
| 1060T | 0.008 (0.20) | 0.005 (0.13) |
| 1070T | 0.008 (0.20) | 0.005 (0.13) |
| 1080T | 0.008 (0.20) | 0.006 (0.15) |
| 1090T | 0.008 (0.20) | 0.007 (0.18) |
| 1100T | 0.010 (0.25) | 0.008 (0.20) |
| 1110T | 0.010 (0.25) | 0.009 (0.23) |
| 1120T | 0.011 (0.28) | 0.010 (0.25) |
| 1130T | 0.011 (0.28) | 0.012 (0.30) |
| 1140T | 0.011 (0.28) | 0.013 (0.33) |

## 4.3.5 Maximum allowable misalignment for Woods Duraflex® couplings

Table 3: Allowable gap in inches (centimeters)

| Coupling size | 1° angular misalignment | 2° angular misalignment | 3° angular misalignment | 4° angular misalignment |
|---|---|---|---|---|
| WE2 | 0.032 (0.081) | 0.065 (0.165) | 0.097 (0.247) | 0.129 (0.328) |
| WE3 | 0.037 (0.094) | 0.074 (0.188) | 0.111 (0.282) | 0.148 (0.377) |
| WE4 | 0.040 (0.100) | 0.079 (0.201) | 0.119 (0.301) | 0.158 (0.401) |
| WE5 | 0.047 (0.120) | 0.094 (0.240) | 0.142 (0.360) | 0.189 (0.480) |
| WE10 | 0.057 (0.144) | 0.113 (0.288) | 0.170 (0.432) | 0.227 (0.575) |
| WE20 | 0.064 (0.163) | 0.129 (0.327) | 0.193 (0.490) | – |
| WE30 | 0.073 (0.187) | 0.147 (0.373) | 0.220 (0.560) | – |
| WE40 | 0.085 (0.215) | 0.170 (0.431) | 0.254 (0.646) | – |
| WE50 | 0.099 (0.252) | 0.198 (0.503) | 0.297 (0.755) | – |
| WE60 | 0.109 (0.278) | 0.219 (0.556) | – | – |
| WE70 | 0.122 (0.310) | 0.244 (0.621) | – | – |
| WE80 | 0.140 (0.355) | 0.279 (0.710) | – | – |

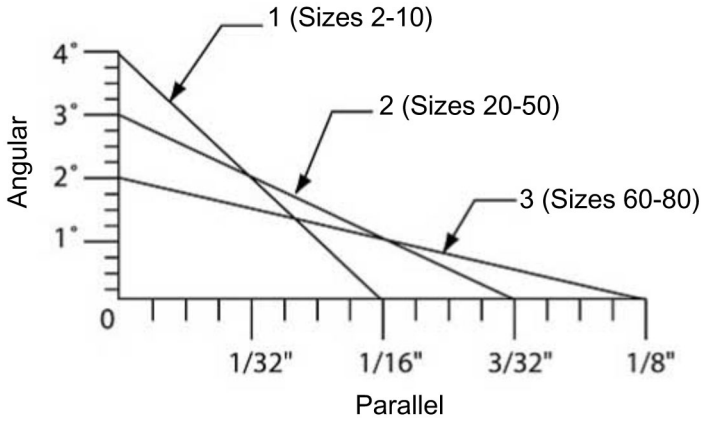


1. Sizes 2 - 10
2. Sizes 20 - 50
3. Sizes 60 - 80

Figure 10: Angular and parallel alignment thresholds

### 4.3.6 Final alignment

You cannot perform the final alignment until you initially operate the pump long enough to reach operating temperature. When the pump reaches the normal operating temperature, then secure the pump and re-check the alignment. Make sure that you compensate for temperature accordingly.

NOTICE:

Elastomeric couplings are specifically designed to accommodate angular shaft misalignment, as well as parallel offset of the pump and motor shafts. However, the amount of the offset and/or misalignment depends on the style of the applied flexible coupling. If you do not correct this coupling misalignment, there is a significant impact on the overall life of the mechanical seals and the bearings of the pump.

## 4.4 Piping checklists

### 4.4.1 General piping checklist

CAUTION:

Never draw piping into place by using force at the flanged connections of the pump. This can impose dangerous strains on the unit and cause misalignment between the pump and driver. Pipe strain adversely affects the operation of the pump, which results in physical injury and damage to the equipment.

#### Piping guidelines

Guidelines for piping are given in the Hydraulic Institute Standards available from the Hydraulic Institute at 9 Sylvan Way, Parsippany, NJ 07054-3802. You must review this document before you install the pump.

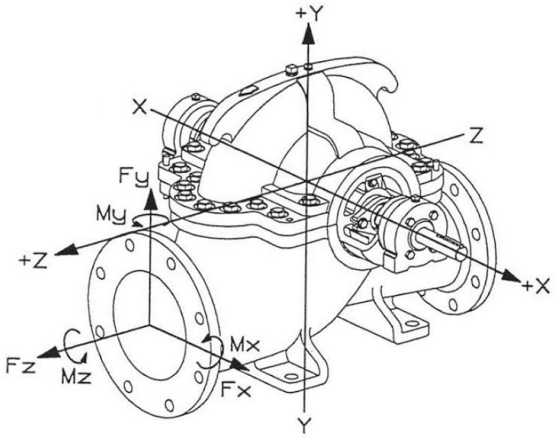


Figure 11: Forces and moments for horizontally split case pumps

#### Flange loads and configuration

For a listing of all e-HSC pump models, refer to the e-HSC technical bulletin.

Table 4: Flange Loading Ratings

| Diameter | | Fx Max | | Fy Max | | Fz Max | | Mx Max | | My Max | | Mz Max | |
|---|---|---|---|---|---|---|---|---|---|---|---|---|---|
| in. | mm | lb | N | lb | N | lb | N | lb-ft | N m | lb-ft | N m | lb-ft | N m |
| 2.5 | 64 | 546 | 740 | 620 | 840 | 502 | 680 | 332 | 450 | 243 | 330 | 266 | 360 |
| 3 | 76 | 664 | 900 | 738 | 1000 | 605 | 820 | 354 | 480 | 254 | 345 | 288 | 390 |
| 4 | 102 | 885 | 1200 | 988 | 1340 | 797 | 1080 | 387 | 525 | 277 | 375 | 321 | 435 |
| 5 | 127 | 1047 | 1420 | 1165 | 1580 | 944 | 1280 | 465 | 630 | 332 | 450 | 420 | 570 |
| 6 | 152 | 1328 | 1800 | 1475 | 2000 | 1195 | 1620 | 553 | 750 | 387 | 525 | 454 | 615 |

| Diameter | | Fx Max | | Fy Max | | Fz Max | | Mx Max | | My Max | | Mz Max | |
|---|---|---|---|---|---|---|---|---|---|---|---|---|---|
| in. | mm | lb | N | lb | N | lb | N | lb-ft | N m | lb-ft | N m | lb-ft | N m |
| 8 | 203 | 1770 | 2400 | 1977 | 2680 | 1593 | 2160 | 719 | 975 | 509 | 690 | 586 | 795 |
| 10 | 254 | 2198 | 2980 | 2463 | 3340 | 1991 | 2700 | 985 | 1335 | 697 | 945 | 808 | 1095 |
| 12 | 305 | 2640 | 3580 | 2950 | 4000 | 2375 | 3220 | 1339 | 1815 | 951 | 1290 | 1095 | 1485 |
| 14 | 356 | 3083 | 4180 | 3437 | 4660 | 2773 | 3760 | 1715 | 2325 | 1217 | 1650 | 1405 | 1905 |
| 16 | 406 | 3526 | 4780 | 3924 | 5320 | 3172 | 4300 | 2146 | 2910 | 1538 | 2085 | 1759 | 2385 |
| 18 | 457 | 3968 | 5380 | 4411 | 5980 | 3570 | 4840 | 2644 | 3585 | 1881 | 2550 | 2168 | 2940 |
| 20 | 508 | 4411 | 5980 | 4897 | 6640 | 3968 | 5380 | 3197 | 4335 | 2268 | 3075 | 2611 | 3540 |
| 24 | 610 | 5296 | 7180 | 5871 | 7960 | 4750 | 6440 | 4470 | 6060 | 3186 | 4320 | 3673 | 4980 |
| 28 | 711 | 6181 | 8380 | 6845 | 9280 | 5546 | 7520 | 5952 | 8070 | 4248 | 5760 | 4912 | 6660 |
| 32 | 813 | 7066 | 9580 | 7848 | 10640 | 6343 | 8600 | 7678 | 10410 | 5465 | 7410 | 6328 | 8580 |

## Checklist

| Check | Explanation/comment | Checked |
|---|---|---|
| Always install the piping to the pump. | Do not move the pump to the pipe. This can make the final alignment impossible. | |
| Check that the suction and discharge piping are supported independently near the pump and are properly aligned. | This prevents strain from being transmitted to the pump when the flange bolts are tightened. Also use pipe hangers or other supports at necessary intervals in order to provide support. | |
| When you use expansion joints, check that they are installed beyond the piping supports closest to the pump. | Do not install expansion joints next to the pump or in any position that would cause a strain on the pump that results from system pressure changes. | |
| Check that tie bolts are used with expansion joints. | This prevents pipe strain. | |
| Check that the piping is installed as straight as possible and that any unnecessary bends are avoided. Where necessary, use 45° or long-sweep 90° fittings. | This helps to decrease friction losses. | |
| Check that all piping joints are leak tight. | – | |
| Check that the inside diameters of the flanged joints match properly. | – | |
| Check that burrs and sharp edges are removed when you make up the joints. | – | |
| When you anticipate considerable temperature changes, check that equipment for absorbing expansion is installed in the system. | This helps to avoid strain on the pump. | |
| When you use an isolation pad, check that flexible piping is used on both the suction and discharge sides of the pump. | – | |
| Check that the pipeline has isolation valves around the pump and a drain valve in the suction pipe. | – | |

## 4.4.2 Suction piping checklist

The sizing and installation of the suction piping is extremely important. It must be selected and installed so that pressure losses are minimized and sufficient liquid flows into the pump when it is started and operated. Many NPSH problems can be directly attributed to improper suction piping systems.

### Piping checklist

| Check | Explanation/comment | Checked |
|---|---|---|
| Keep the suction piping short in length, as direct as possible, and never smaller in diameter than the pump suction opening. | If the suction pipe is short, the pipe diameter can be the same size as the suction opening. If longer suction piping is required, pipes should be one or two sizes larger than the opening depending on piping length. | |
| Check that the elbows in the suction piping for horizontal double-suction pumps are installed per the Hydraulics Institute Standards since there is always an uneven turbulent flow around an elbow. | When there is an elbow in a position other than the vertical when in relation to the pump suction nozzle, this causes more liquid to enter one side of the impeller than the other. The result is highly unequalized thrust loads that overheat the bearings and cause rapid wear, which adversely affects the hydraulic performance. See the Example of unbalanced loading figure. | |
| Check that pipe reducers on the inlet side have no more than one pipe diameter reduction in a single reducer. | This avoids excessive turbulence and noise. | |
| When operating on a suction lift, check that the suction pipe slopes upward to the pump nozzle. | A horizontal suction line must have a gradual rise to the pump. Any high point in the pipe can become filled with air and prevent proper operation of the pump. | |
| (Optional) You can install a short section of pipe adjacent to the suction flange such as Dutchman or a spool piece that is designed so that it can be readily dropped out of the line. | This facilitates the cleansing of the liquid passage of the pump without dismantling the pump. With this arrangement, anything that clogs the impeller is accessible with the removal of the spool piece or pipe section. | |

### Example of unbalanced loading

This figure shows the unbalanced loading of a double-suction impeller due to the uneven flow around an elbow that is adjacent to the pump:

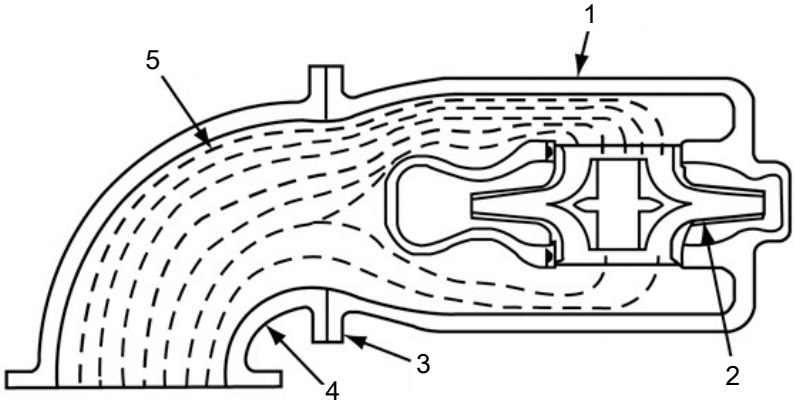


1. Pump casing
2. Impeller
3. Pump suction flange
4. Suction elbow
5. Water velocity increases here and causes a greater flow to one side of the impeller.

Figure 12: Unbalanced loading of double-suction impeller

## Examples

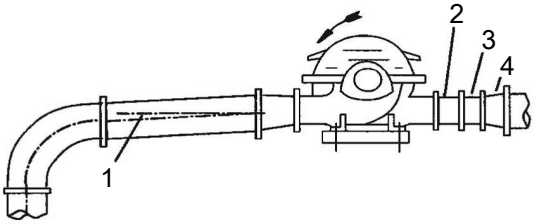


1. Level centerline of pipe
2. Check valve
3. Gate valve
4. Increaser

Figure 13: Suction pipe installed with a gradual rise to the pump – correct

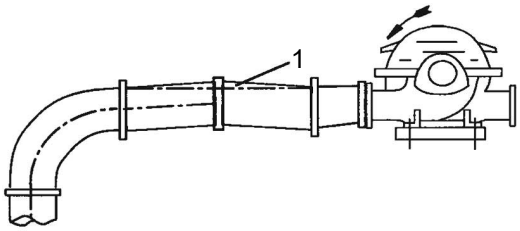


1. Air pocket

Figure 14: Suction pipe installed with a gradual rise to the pump – incorrect

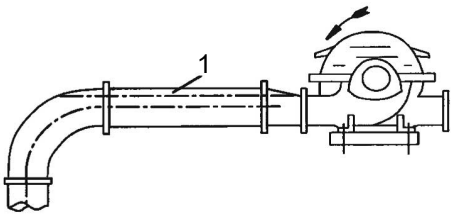


1. Air pocket

Figure 15: Suction pipe installed with a reducer – incorrect

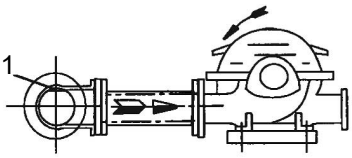


1. Air pocket

Figure 16: Incorrect

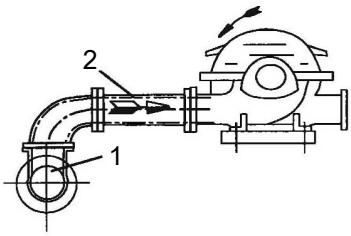


1. No air pockets
2. Gradual rise

Figure 17: Correct

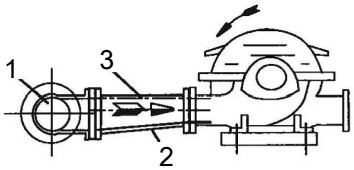


1. No air pockets
2. Eccentric reducer

Figure 18: Gradual rise to the pump – correct

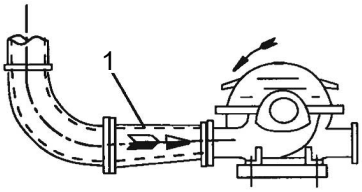


1. Distance plus eccentric reducer straightens the flow

Figure 19: Suction pipe above the pump – correct

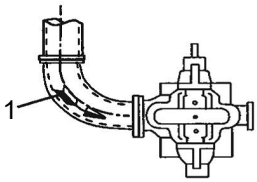


1. Path of the water

Figure 20: Suction pipe above the pump – incorrect

## 4.4.3 Suction-piping valve considerations

### Suction valves

Before you install suction valves in the suction piping, review these considerations:

- Make sure that the suction piping valves are placed right before the run of recommended straight pipe.
- Never throttle the pump with the use of a valve on the suction side of the pump.
- Only use suction valves to isolate the pump for maintenance purposes.
- Always install the valve in a position that avoids the formation of air pockets.

### Foot valves

If the pump operates under static suction lift conditions, you can install a foot valve in the suction line in order to avoid the necessity of priming each time you start the pump.

Before you install foot valves in the suction piping, review these considerations:

- Make sure this valve is of the flapper type, rather than the multiple spring type, and that it is sized to avoid excessive friction in the suction line.
- Size the foot valve and pipe in order to maximize $NPSH_A$ to the pump by minimizing suction line losses.
- When foot valves are used, or where there are other possibilities of water hammer, close the discharge valve slowly before you shut down the pump.

### Check valves

In normal applications, check valves are placed in the discharge piping. Before you use a check valve in the suction piping, consider the added pressure drop to the pump, the potential of water hammer, and the chance of allowing the entire pump volute to be exposed to the discharge pressure.

### 4.4.4 Discharge piping considerations

**Maximum velocity**

Make sure that the maximum velocity in the discharge piping does not exceed 15 feet per second (4.6 m/s). If a check valve is present in the outlet piping, this value must be reduced.

**Discharge piping and fitting sizes**

System losses, life-cycle costs, and process considerations usually determine the size of discharge piping and fittings. Some high energy pumps are sensitive to flow disturbing devices mounted close to the pump outlet. Consult Xylem when in doubt about the minimum required length of the straight pipe.

## 4.5 Pressure gauges and pump insulation

**Installation and use of pressure gauges**

Install properly-sized pressure gauges in both the suction and discharge nozzles in the gauge taps. The gauges enable easy observation of the pump operation and it is easy to determine if the pump is operating in conformance with the performance curve. Cavitation, vapor binding, or other unstable operations cause widely-fluctuating discharge pressure to be noted.

WARNING:

Make sure that all components are properly guarded or insulated when operating at extremely high or low temperatures.

**Proper pump insulation**

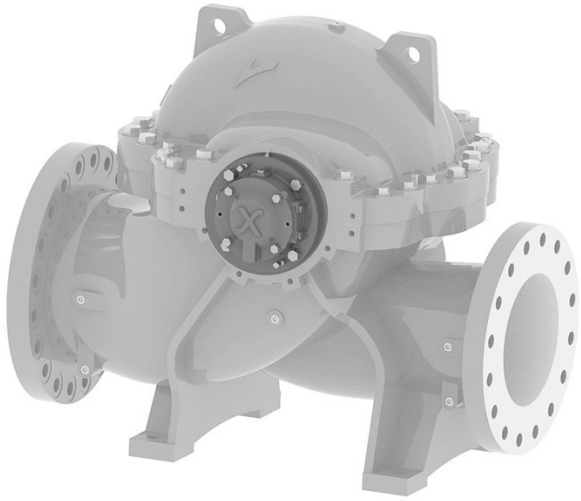

Figure 21: Proper pump insulation

You should not insulate the bearing housings, shown in dark gray, as this may cause overheating of bearings. You may insulate all other portions of the pump, shown in light gray.

# 5 Commissioning, Startup, Operation, and Shutdown

## 5.1 Preparation for startup

WARNING:

- Always disconnect and lock out power to the driver before you perform any installation or maintenance tasks. Failure to disconnect and lock out driver power will result in serious physical injury.
- Electrical connections must be made by certified electricians in compliance with all international, national, state, and local rules.
- Never operate a pump without a properly installed coupling guard. Personal injury will occur if you run the pump without a coupling guard.
- Check the rotation of the power unit and pump in relation to that of the drive as shown by the arrows on the case. Rotate the drive manually before you apply power-checking rotation. Do not operate in the reverse direction of these arrows as serious damage or injury can occur.

### System flushing

Flush new and old systems in order to eliminate all foreign matter. Heavy scale, welding splatter, and wire or other large foreign matter can clog the pump impeller. This reduces the capacity of the pump which then causes cavitation, excessive vibration, and/or damage to close clearance parts such as wear rings, seals, and sleeves.

### Pre-operation inspections

Perform these inspections before you start the pump:

- Check the alignment between the pump and motor.

  See Coupling alignment in the Installation chapter for alignment requirements.
- Check all connections to the motor and starting device against the wiring diagram.
- Check the voltage, phase, and frequency on the motor nameplate against the line circuit.
- Check the suction and discharge piping and the pressure gauges for proper operation.
- Check that you can turn the rotating element by hand in order to verify that it rotates freely.
- Check the stuffing box adjustment, lubrication, and piping.
- Check the driver lubrication.

  Refer to the driver Installation, Operation, and Maintenance manual.
- Check that the pump bearings are properly lubricated.
- Check that the coupling is properly lubricated, if required.
- Check that the pump is full of liquid and that all valves are properly set and operational, with the discharge valve closed and the suction valve fully open. Purge all air from the top of the casing.
- Check the direction of the rotation.

  Be sure that the driver operates in the direction indicated by the arrow on the pump casing. Serious damage can result if you operate the pump with the incorrect rotation. Check the rotation each time you disconnect the motor leads.

## 5.2 Pump priming

CAUTION:

Do not run the pump dry.

### When to prime the pump

You must prime the pump before startup. When it is possible, locate the pump below the fluid level in order to facilitate priming and to ensure a steady flow of liquid. This condition provides a positive suction head on the pump. It is also possible to prime the pump by pressurizing the suction vessel.

### Methods for pump priming

| Pump installation | Priming method |
|---|---|
| Positive head on the suction | Open the suction valve and loosen the vent plug on top of the casing. This allows air to be purged from the casing. While you vent the air from the pump body, always rotate the pump shaft a few times by hand. |
| Suction lift | Priming must be done by other methods such as foot valves, ejectors, or by manually filling the casing and suction line. |

## 5.3 Fill the system

1. Locate the vents at the highest point so that trapped gases and air can escape.

   However, if the gases are flammable, toxic, or corrosive, then vent them to an appropriate place in order to prevent harm to personnel or to other parts of the system.
2. Check the pipe hangers and anchors to make sure that they are properly set to take the additional weight of the pumped fluid.
3. Close all of the drains.
4. Fill the system slowly so that excessive velocities do not cause rotation of the pumping elements.

   Rotation of the pumping elements can cause damage to the pump or its driver.
5. Check the adequacy of the anchors and hangers:
   a) Mount a dial indicator off of any rigid structure not tied to the piping.
   b) Set the indicator button on the pump flange in the axial direction of the nozzle.

      If the indicator moves as the filling proceeds, then the anchors and supports are not adequate or are not set properly. Take corrective measures.

## 5.4 Start the pump

NOTICE:

If the pump loses its prime during start-up, shut it down and correct the condition before you repeat this procedure.

1. Close the drain valves and the valve in the discharge line.
2. Fully open all valves in the suction line.
3. Prime the pump.
4. Start the pump driver.

   You might need to warm up the turbines and engines. Consult the instructions provided by the manufacturer.
5. When the pump is operating at full speed, slowly open the discharge valve.

Perform this step immediately after start-up in order to prevent damage to the pump from operating with zero flow.

## 5.5 Pump operation checklist

CAUTION:

Vary the capacity with the regulating valve in the discharge line. Never throttle the flow from the suction side since this can result in decreased performance, unexpected heat generation, and equipment damage.

| Requirement | Description | Checked |
|---|---|---|
| Driver/pump rotation | Check the rotation each time you reconnect the motor leads. Be sure that the driver operates in the direction indicated by the arrow on the pump casing. Rough operation and extreme vibration can result if you operate the pump in the wrong direction. | |
| Flow | An accurate measurement of flow rate (volume/time) is difficult in the field. Venturi meters, flow nozzles, orifice plates, or timing the draw down in the wet well are all possible methods. Record any reading for future reference. | |
| Pressure | Check and record both suction and discharge pressure gauge readings for future reference. Also record voltage, amperage per phase, and pump speed. You can also record the kilowatts if you have an available indicating wattmeter. | |
| Temperature | Check and record bearing temperatures using a thermometer. Make sure that temperatures do not exceed 250°F (121°C). | |
| Vibration | The acceptable vibration level of a centrifugal pump depends on the rigidity of the pump and the supporting structure. Refer to the Hydraulic Institute Standards for a complete description and charts on various pumps. | |
| Sound | Field sound levels are difficult to measure because of background noise from piping, valves, drivers, and gears. Follow the recommendations in the Hydraulic Institute Standards. | |
| Output | Make all pump output adjustments with the discharge valves. | |

## 5.6 Shut down the pump

WARNING:

Always disconnect and lock out power before servicing to prevent unexpected startup. Failure to do so could result in death or serious injury.

1. Shut down the pump driver.

   Consult the manufacturer instructions for special operations.
2. Close the suction and discharge valves.

# 6 Maintenance

## 6.1 Maintenance schedule

### Maintenance inspections

A maintenance schedule includes these types of inspections:

- Routine maintenance
- Routine inspections
- Three-month inspections
- Annual inspections

Shorten the inspection intervals appropriately if the pumped fluid is abrasive or corrosive or if the environment is classified as potentially explosive.

### Routine maintenance

Perform these tasks whenever you perform routine maintenance:

- Lubricate the bearings.
- Inspect the seals.
- Insulate the pump.

  Ensure that the bearing assembly grease fittings remain accessible and visible. The vent slots on the sides and bottom of the bearing assembly should remain uncovered and completely open.

### Routine inspections

Perform these tasks whenever you check the pump during routine inspections:

- Check for unusual noise, vibration, and bearing temperatures.
- Check the pump and piping for leaks.
- Analyze the vibration.
- Check the seal chamber and stuffing box for leaks.
  - Ensure that there are no leaks from the mechanical seals.

### Three-month inspections

Perform these tasks every three months:

- Check that the foundation and the hold-down bolts are tight.

### Annual inspections

Perform these inspections one time each year:

- Check the pump capacity.
- Check the pump pressure.
- Check the pump power.

If the pump performance does not satisfy your process requirements, and the process requirements have not changed, then perform these steps:

1. Disassemble the pump.
2. Inspect it.
3. Replace worn parts.

## 6.2 Bearing and coupling lubrication

### Lubrication at initial startup

Bearing housings are packed with grease at the factory and do not require attention before you start the pump, as long as the pump was stored in a clean, dry place before its first operation. Monitor the bearings for an hour after you start the pump in order to verify that they are operating properly.

### Bearing lubrication schedule

Periodic addition of grease is not required. Regrease the bearings if the bearing brackets are removed for maintenance reasons. See Regrease the bearings for more information.

### Bearing operating temperatures

The maximum operating temperature for ball bearings should not exceed 250°F (121°C). If the temperature of the bearing frame rises above this limit, shut down the pump and determine the cause. Check the temperature using an accurate measuring device.

### Coupling lubrication

| Coupling type | Lubrication requirements |
|---|---|
| Grid couplings | Grid or gear tooth couplings (Falk Grid Steelflex or Falk Crowned Tooth coupling for instance) are initially lubricated with Falk Long Term Grease (LTG) and do not require relubrication for up to three years. If coupling leaks grease, or is exposed to extreme temperatures or excessive moisture, more frequent lubrication may be required.<br>Use coupling manufacturer's recommended grease to provide trouble free performance. |
| Polymer and elastomeric element-type | Polymer and elastomeric element-type couplings are maintenance-free and do not require lubrication. If other types of couplings are used, follow maintenance instructions of coupling manufacturer. |

## 6.2.1 Regrease the bearings

Before you begin this procedure, make sure that you have these items:

- New bearings and lip seals
- Exxon Polyrex EM grease

  Exxon Polyrex EM grease is the only recommended grease. Do not use any other grease.
- Grease gun

1. Thoroughly clean out the bearing housing and make sure that it is protected against dust and other contaminants.
2. Locate the grease fittings provided on the underside of the bearing brackets.

   These fittings are used to fill the bearing cavities.
3. Using a grease gun, fill the cavities with Exxon Polyrex EM2 grease until the grease comes out from underneath the lip seals.

# 6.3 Mechanical-seal maintenance

WARNING:

The mechanical seal used in an Ex-classified environment must be properly certified. Prior to startup, make sure that all areas that could leak pumped fluid to the work environment are closed.

CAUTION:

Never operate the pump without liquid supplied to mechanical seal. If you run a mechanical seal dry, even for a few seconds, this can cause seal damage. Physical injury can occur if a mechanical seal fails.

### Mechanical seal life

The life of a mechanical seal depends on the cleanliness of the pumped fluid. Due to the diversity of operating conditions, it is not possible to give definite indications as to the life of a mechanical seal. In clean water applications, typical mechanical seal life spans two to three years.

## 6.4 Flood-damaged pump maintenance

WARNING:

- Always disconnect and lock out power before servicing to prevent unexpected startup. Failure to do so could result in death or serious injury.
- Electrical connections must be made by certified electricians in compliance with all international, national, state, and local rules.

Perform these maintenance tasks if your pump has been flood damaged:

- Replace bearings and grease if the pump has been subjected to flood conditions.
- Make sure that the motor is evaluated by a qualified motor shop before you place it back into service.
- Clean and inspect mechanical seals, stuffing boxes, and packing rings and replace them if it is necessary.
- Replace couplings that require lubrication.

## 6.5 Disassembly

### 6.5.1 Disassembly precautions

This manual clearly identifies accepted methods for disassembling units. These methods must be adhered to.

WARNING:

- Make sure that the pump is isolated from the system and that pressure is relieved before you disassemble the pump, remove plugs, open vent or drain valves, or disconnect the piping.
- Always disconnect and lock out power to the driver before you perform any installation or maintenance tasks. Failure to disconnect and lock out driver power will result in serious physical injury.
- Crush hazard. The unit and the components can be heavy. Use proper lifting methods and wear steel-toed shoes at all times.

NOTICE:

Make sure that all replacement parts are available before you disassemble the pump for overhaul.

### 6.5.2 Drain the pump

CAUTION:

- Allow all system and pump components to cool before you handle them to prevent physical injury.

1. Close the isolation valves on the suction and discharge sides of the pump.

   You must drain the system if no valves are installed.
2. Open the drain valve.

   Do not proceed until liquid stops coming out of the drain valve. If liquid continues to flow from the drain valve, the isolation valves are not sealing properly and you must repair them before you proceed.
3. Leave the drain valve open and remove the drain plug located on the bottom of the .

   Do not reinstall the plug or close the drain valve until the reassembly is complete.
4. Drain the liquid from the piping and flush the pump if it is necessary.
5. Disconnect all auxiliary piping and tubing.

### 6.5.3 Remove the hex coupling guard

1. Identify the parts of the coupling guard. See Figure 23. The following instructions will reference items listed in Figure 23.
2. Uncouple the upper halves of the outer [2] and inner [1] guard assemblies by removing the two hex bolts [9] located on the top two faces of the hex guard assembly.
3. Remove the upper halves of the outer [2] and inner [1] guard assemblies by unfastening the hex head bolts [9] that fasten the flanges of the guards together and lifting the upper guard halves.
4. Uncouple the lower halves of the outer [2] and inner [1] guard assemblies by removing the two hex head bolts [9] located on the bottom two faces of the hex guard assembly.
5. Unfasten the remaining hex head bolts [9] from the various support structures [3-8] to disassemble the remainder of the hex guard assembly.

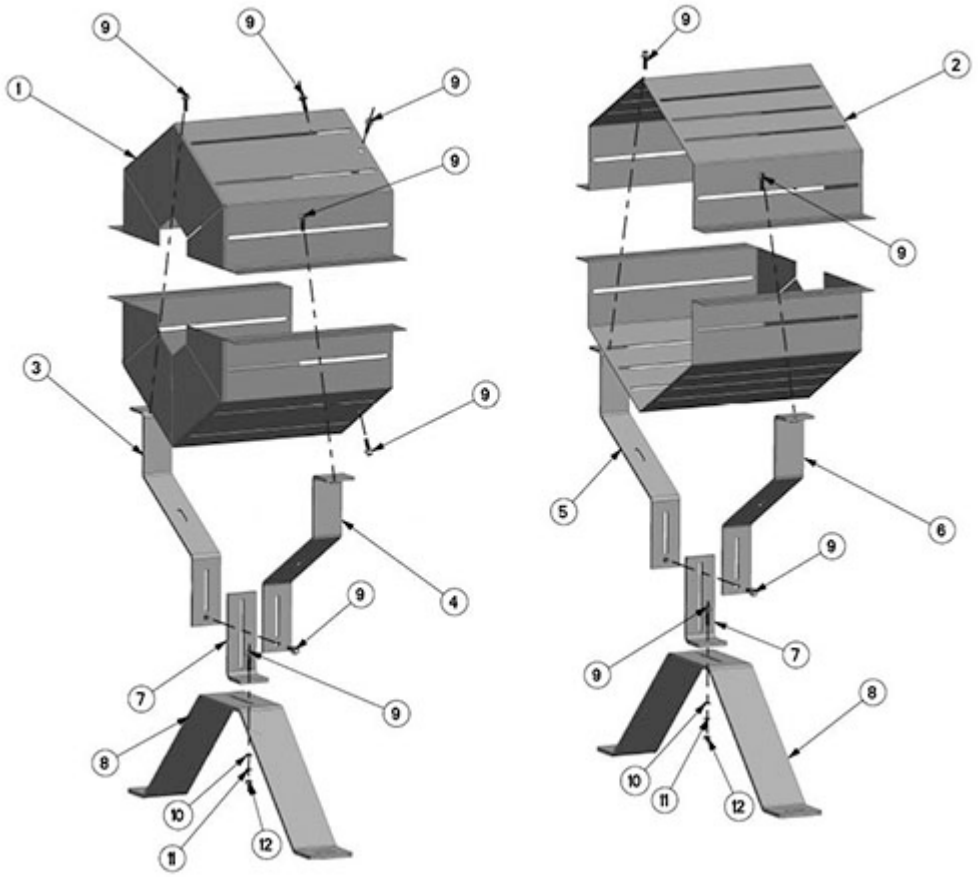


Figure 22: Coupling guard exploded view

| Legend | Part Name |
|---|---|
| 1 | Coupler Guard Assembly Inner |
| 2 | Coupler Guard Assembly Outer |
| 3 | Guard Support Pump Side Left |
| 4 | Guard Support Pump Side Right |
| 5 | Guard Support Motor Side Left |
| 6 | Guard Support Motor Side Right |
| 7 | Guard Support Lower |
| 8 | Pedestal |
| 9 | Hex Bolt |

| Legend | Part Name |
|---|---|
| 10 | Washer |
| 11 | Lock Washer |
| 12 | Hex Nut |

### 6.5.4 Remove the mechanical seals and bearings without removing the upper half of the casing

WARNING:

- Always disconnect and lock out power to the driver before you perform any installation or maintenance tasks. Failure to disconnect and lock out driver power will result in serious physical injury.
- Extreme temperature hazard: Allow pump temperatures to reach acceptable levels before proceeding. Open drain valve, do not proceed until liquid stops coming out of the drain valve. If liquid does not stop flowing from drain valve, isolation valves are not sealing and should be repaired before proceeding. After liquid stops flowing from drain valve, leave drain valve open and continue. Remove the drain plug located on the bottom of the pump housing. Do not reinstall plug or close drain valve until reassembly is completed. Failure to follow these instructions could result in property damage and/or moderate personal injury.

1. Close valves on suction and discharge sides of pump. If no valves have been installed, it will be necessary to drain the system.
2. Remove the coupling guard (follow *Remove the hex coupling guard* on page 36). For spacer coupler, loosen the capscrews which secure the coupler flanges to the coupler hubs. Remove the coupler flanges and sleeves by compressing the flanges and pulling out from beneath the hubs or by loosening the Allen set screws and sliding the hubs back on the shaft. Remove the coupler hubs from the pump shaft. For non-spacer couplers, loosen set screws and slide flanges back on shafts and remove rubber element.
3. Remove all cap screws from each of the bearing glands and remove the bearing glands and bearing gland gaskets.
4. Remove all the caps crews from each of the bearing bodies, leave the two smaller jacking screws in the bearing body.

   NOTE: Steps 5-9 relate to the outboard (opposite of the coupling) side of the shaft.
5. Bend back the lockwasher tab and remove both the lockwasher and locknut on the outboard end of the shaft (the opposite side of the coupling). A spanner wrench should be used to remove the locknut.

   NOTE: Another person may be required to ensure the shaft does not rotate during this step.
6. Evenly tighten the two jacking screws on the outboard bearing body so that the bearing body assembly slides towards the end of the shaft (see Figure 25). Pull the bearing housing assembly off the remaining portion of the shaft. Pry bars may be used to assist in pulling the bearing housing assembly off the shaft.

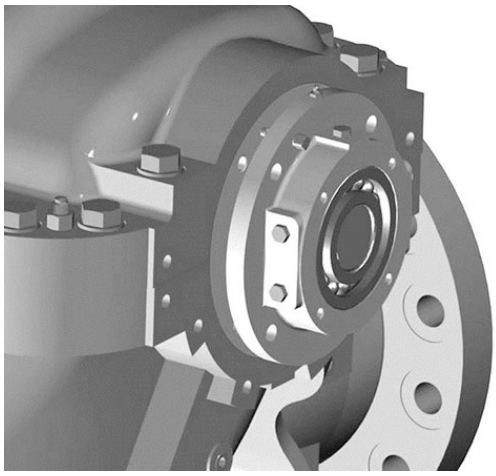

Figure 23

7. Remove all cap screws from the seal end cover (seal gland) and insert the threaded rods of the universal extraction tool, PN: P6014749, into the mechanical seal gland. Fix the extraction tool onto the threaded rods and thread the main jacking screw into the center of the fixture. (refer to the next three figures)

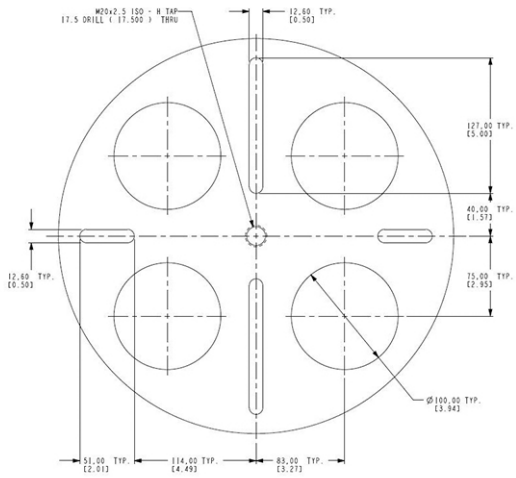


Figure 24: Universal extraction plate (PN: P6014749)

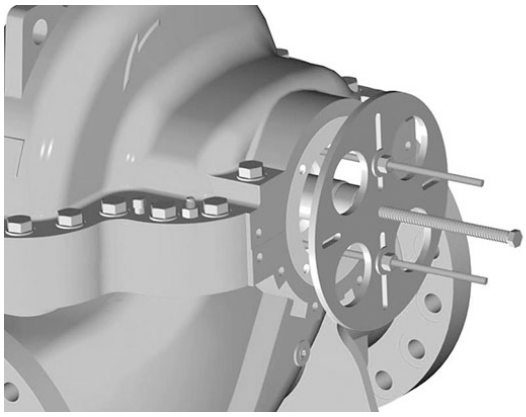

Figure 25: Universal extraction tool applied to outboard (opposite of coupling) side of pump

8. Tighten the bolt in the center of the extraction fixture to remove the seal end cover from the shaft.

   NOTE: Mechanical seal seat is installed in the seal end cover.

CAUTION:

Do not reuse the ball bearings.

9. Using flat head screw drivers or Allen keys, remove mechanical seal rotating assembly completely from the shaft.

   NOTE: The locknut, lockwasher and shaft collar (spacer washer) are not used on the inboard bearing.

   IMPORTANT: make sure to replace all bearing gaskets, bearings, lip seals, O-rings and mechanical seals with new components- refer to Replacement Part List.

10. Repeat steps 5-9 to disassemble the inboard side (coupling side) of the shaft.

    NOTE: The universal extraction tool should be used to remove the bearing housing assembly on the inboard side (coupling end) of the shaft in the same manner as the seal end cover (seal gland). Note the placement of the threaded rods in the bearing housing in the following figure.

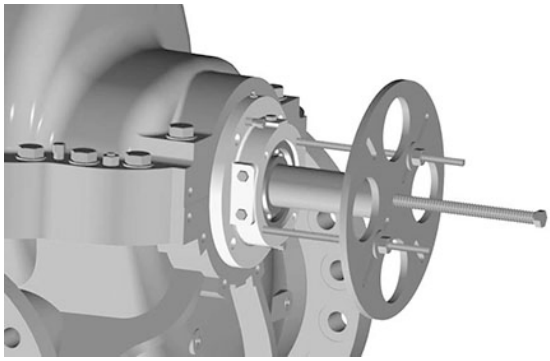

Figure 26: Universal extraction tool applied to bearing housing

### 6.5.5 Dismantling the pump when it is required to remove the rotating element of the pump

WARNING:

- Always disconnect and lock out power to the driver before you perform any installation or maintenance tasks. Failure to disconnect and lock out driver power will result in serious physical injury.
- Extreme temperature hazard: Allow pump temperatures to reach acceptable levels before proceeding. Open drain valve, do not proceed until liquid stops coming out of the drain valve. If liquid does not stop flowing from drain valve, isolation valves are not sealing and should be repaired before proceeding. After liquid stops flowing from drain valve, leave drain valve open and continue. Remove the drain plug located on the bottom of the pump housing. Do not reinstall plug or close drain valve until reassembly is completed. Failure to follow these instructions could result in property damage and/or moderate personal injury.

1. Close valves on suction and discharge sides of pump. If no valves have been installed, it will be necessary to drain the system.
2. Remove the coupling guard (follow *Remove the hex coupling guard* on page 36). For spacer coupler, loosen the capscrews which secure the coupler flanges to the coupler hubs. Remove the coupler flanges and sleeves by compressing the flanges and pulling out from beneath the hubs or by loosening the Allen set screws and sliding the hubs back on the shaft. Remove the coupler hubs from the pump shaft. For non-spacer couplers, loosen set screws and slide flanges back on shafts and remove rubber element.
3. Remove all casing main joint capscrews and dowel pins.

4. Tighten the jacking screws in the upper half of the casing to separate the upper and lower casing halves. Then lift off the upper half of the casing.
5. Tap the seal bodies with a soft-headed hammer to break the seal between the seal body and lower casing half, and lift the rotating element out of the lower casing. Rotating element may be removed to a suitable location for repair.

   Note: A spare rotating element can be installed at this point.

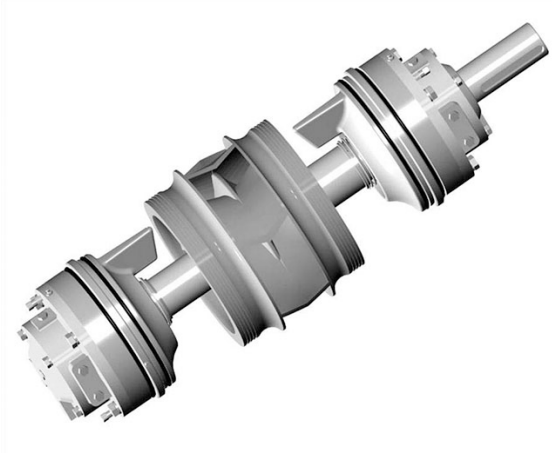

Figure 27: Spare rotating assembly

6. Refer to *Remove the mechanical seals and bearings without removing the upper half of the casing* on page 37 to remove bearing housings and mechanical seals from both the inboard and outboard shaft locations.
7. Remove seal bodies (stuffing boxes).
8. Remove lip seals from bearing housings and remove the mechanical seal seats from each of the seal end covers by tapping on them from the rear.
9. Remove O-rings from each of the seal end covers and seal bodies.
10. Remove the two casing rings from the impeller if available.
11. Remove the impeller-retaining ring with retaining pliers. Heat the impeller hub on both ends to 350°F (176°C) maximum, and pull or push the impeller from the shaft. (Instead of heating the impeller, you may press impeller off the shaft if a press is available).

    NOTE: Press away from the coupling end.

    NOTE: For impellers with replaceable rings; remove the rings, if necessary, by loosening the set screws.

### 6.5.6 Pump disassembly for pumps with drop-in stuffing box and sleeveless shaft (wet shaft) design

Follow disassembly instructions 1-23 outlined in *Pump disassembly for pumps with drop-in stuffing box and sleeve over shaft (dry shaft) design*. Assume the outboard (non-drive end) of the pump must be disassembled first unless stated otherwise. The term 'inboard' refers to the drive-end or coupling end of the pump shaft. The term 'stuffing box' may be interchangeable with 'seal body'.

The following disassembly instructions depend on your specific pump's sealing configuration. Choose the instructions suited to your pump.

## 6.6 Reassembly

### 6.6.1 Pump assembly

Before assembling the pump, identify your pump configuration to ensure the correct set of assembly instructions are adhered to. View the e-XC pump exploded view in *e-XC exploded view* and become familiar with the general assembly layout of the pump as well as part names. This will allow for easier understanding of assembly instructions.

Check which of the following characteristics apply to your pump; circle the main features within your configuration for future reference, if desired.

| Characteristic | Configuration Option | | | |
|---|---|---|---|---|
| Casing Design[1] | Drop-in stuffing box[2] | | Integrated stuffing box[3] | |
| Shaft Design | Shaft with sleeve (Dry Shaft) | | Sleeveless shaft (Wet Shaft) | |
| Sealing Option | Packing | Mechanical Seal | Cartridge Seal | |
| Mechanical Seal Model[4] | MR1 | MR2 | MR3 | MR4 |
| Cartridge Seal Model[4] | MR5 | MR6 | MR7 | MR8 |
| Bearing Lubrication Method | Grease | | Oil | |

[1]See the e-XC Performance Curves and Technical Data document to determine which casing design applies for any given model.

[2]The drop-in stuffing box design utilizes a removable seal chamber as the fastening point for the various sealing configurations. The stuffing box may also be known as a seal body.

[3]The integrated stuffing box design incorporates the seal chamber into the upper and lower casing halves. Therefore, sealing components fasten directly to the pump casing.

[4]Row is only applicable for either mechanical or cartridge seal configurations. For more information on the MR series mechanical seals, see the e-XC Performance Curves and Technical Data document.

WARNING:

- Always disconnect and lock out power to the driver before you perform any installation or maintenance tasks. Failure to disconnect and lock out driver power will result in serious physical injury.

NOTICE:

All bearings, O-rings, gaskets and seals should be replaced with new parts during assembly. All reusable parts should be cleaned of foreign matter before assembly.

### 6.6.2 Assembly of the mechanical seals and bearings without removing the upper half of the casing

NOTE: All bearings, O-rings, and lip-seals should be replaced with new parts during assembly. All reusable parts should be cleaned of foreign matter before reassembly.

NOTE: Reassemble the pump by starting on the outboard end (opposite the coupling). This end locks the rotating element into position in the casing.

1. Press the stationary mechanical seal seat with O-ring into the seal end cover until it bottoms out against the bore. Lightly lubricate the bore to ease assembly. (see Figure 29)
2. Lubricate and roll the O-ring into the grove in the seal end cover.

   IMPORTANT: Steps 3 and 4 must be completed within 10 to 12 minutes to assure proper placement of the mechanical seals.

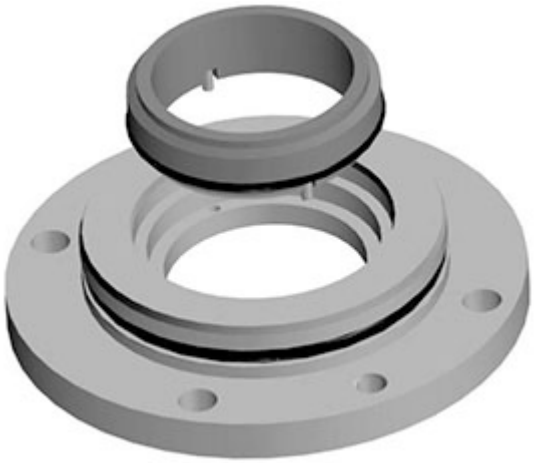

Figure 28: Mechanical seal seat and seal end cover (seal gland) assembly

3. First insert the shoulder ring on the shaft (only at outboard bearing side) and then lightly coat the outboard end of the pump shaft with P-80 Rubber Lubricant Emulsion, vegetable oil, or equal and slide the mechanical seal head onto the shaft. Do not compress the seal spring at this time. (see Figure 30)

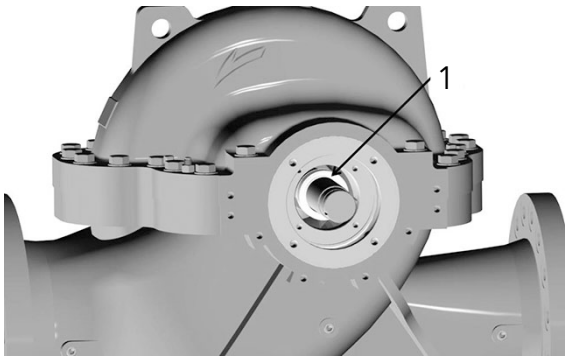


Figure 29: Mechanical seal placement on outboard (opposite of coupling) end of shaft

1. Mechanical seal

CAUTION:

Use a flashlight and make sure the mechanical seal spring is searing properly into the spring holder and around the bellows of the mechanical seal before continuing.

4. Slide the seal end cover, over the shaft, being careful that the head and the seat of the mechanical seal does not get damaged. Then press the seal end cover with the O-ring into the seal body and tighten the capscrews. (see Figure 31)

   NOTE: Because of the compression of the O-ring, it may be difficult to press the O-ring into the seal body. Use longer capscrews to start the seal end cover into the seal body. Draw-up the bolts evenly until the seal end cover is secure in the seal body. To prevent the mechanical seal spring from pushing the seal end cover back out of the seal body. Remove one long capscrew at a time and replace with a regular capscrew.

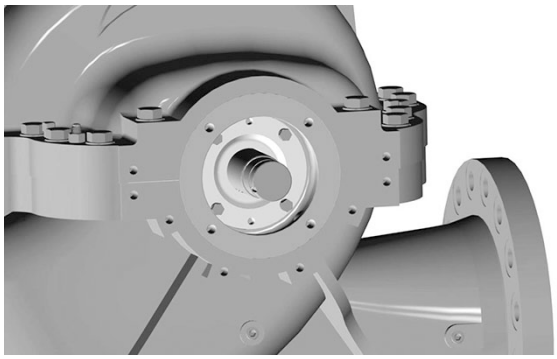

Figure 30: Seal end cover (seal gland) fastened to seal body (stuffing box)

NOTE: Steps 5-7 should be completed in the order demonstrated within Figure 32.

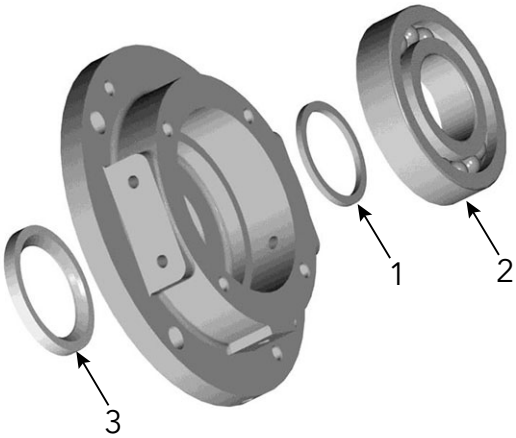


Figure 31: Bearing housing assembly order

5. Place the shoulder ring (item 1) into the bearing body.

   NOTE: Use approximately .5 ounces (15 grams) of thick grease to center and hold the shoulder ring in the middle of the bearing body.

6. Press the bearing (item 2) into the bearing body until it sits flush against the inner shoulder of the bearing body.
7. Press a new lip seal (item 3) into the bearing body. Before installing the lip seal, lubricate the lip seal with lightweight oil.

   NOTE: Lip seals should sit against the machined shoulder in the bearing housing. The lip seal should face away from the mechanical seal seat. (see Figure 33)

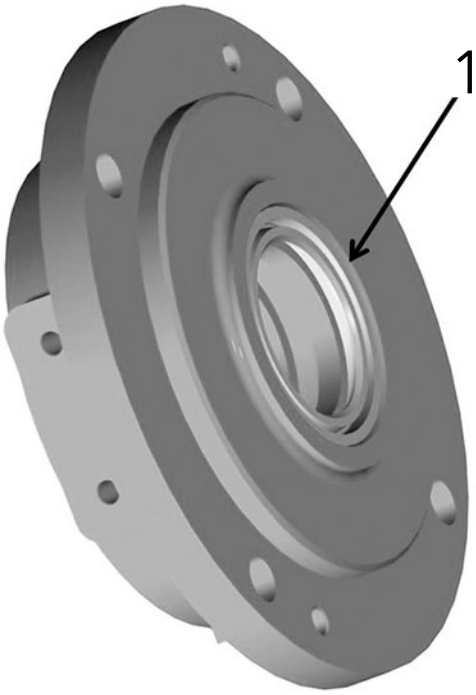


Figure 32: Lip seal installed in bearing housing

1. Lip seal

8. Heat the bearing body assembly with an induction heater.

   NOTE: Steps 9 through 13 are time sensitive and must be completed as quickly as possible.

   CAUTION:
   Do not exceed a temperature of 212°F (100°C).

   NOTE: Steps 10 through 12 may require two or more people to be performed safely if no hoisting equipment is available. The procedure can be accomplished by one person if hoisting or lifting equipment is provided. Ensure insulated gloves are worn during this procedure.

9. Have at least one person hold the heated bearing body assembly close to the shaft. Align the center of the bearing with the center of the shaft.
10. Using a tool such as a screwdriver or a small pair of pliers, the second person should lift the shoulder ring that is inside the bearing body and align it to the center of the shaft if the bearing collar misaligns.
11. Together, both assemblers need to slide the bearing body assembly and shoulder ring onto the shaft. Ensure that the shoulder ring sits flush against the machined shoulder of the shaft and that the bearing body contacts the seal body.
12. Tighten all cap screws on the bearing body.
13. Install the locknut and lockwasher on the outboard end of the shaft. Make certain that the locknut is secure and bend over the tabs on the lockwasher. (see Figure 34)

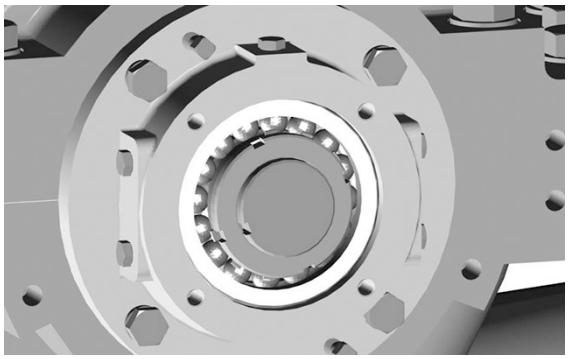

Figure 33: Locknut and lockwasher installation on outboard (opposite of coupling) side

14. Allow the bearing to cool to room temperature. Coat the exposed side of the bearing with two or three ounces (60gm or 85 gm) of recommended grease.
15. Install bearing gasket between bearing body and bearing cap (bearing gland).
16. Slide the bearing cap onto the bearing body and alternately tighten the bearing gland capscrews so as not to "cock" the bearing gland. If not done properly, this will cause the bearing to bind. (see Figure 35)

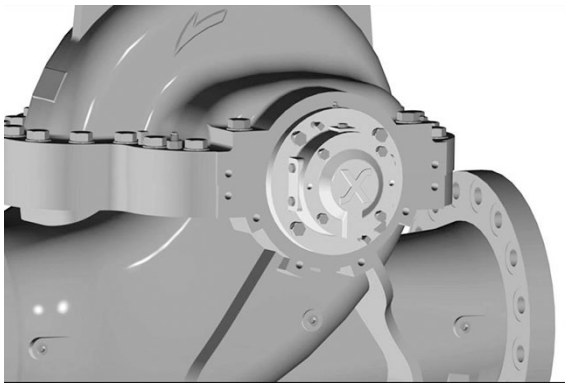

Figure 34: Bearing gland installed on outboard (opposite of coupling) side of pump

17. Repeat steps 1 through 13 for the inboard (coupling end) side of the shaft.

    NOTE: The locknut, lockwasher and shoulder rings are not installed on the inboard end of the pump shaft.
18. Reinstall the coupler and check for alignment, following the instructions found in the "Coupling Alignment" section of this manual (Section 4.3).

### 6.6.3 Reassembly of the pump when it is required to remove the rotating element

NOTE: All bearing, O-rings, lip seals, mechanical seals, gaskets, impeller rings, and casing rings should be replaced with new parts during assembly. All reusable parts should be cleaned of all foreign matter before reassembling. The main casing joint gasket can be made using the upper and lower half as a template. Lay the gasket material on the casing joint. Trim the gasket by lightly tapping with a peen hammer so it is flush with the inside edges of the casing (do not hit casing edge with hammer hard enough to round edge.

NOTE: Precut-casing gaskets can be ordered to minimize the amount of trimming.

1. Before assembling the rotating element prepare the casing and install the casing gaskets to the parting line.
2. Clean the gasket surfaces of the casing. Apply Scotch 3M-77 spray adhesive or equivalent to the lower half of the casing.
3. Within one minute of spraying, set the untrimmed gaskets in place on the lower half of the casing, align the holes in the gaskets with the holes in the casing, and press the gaskets firmly against the lower half of the casing face in the area coated by the adhesive.

4. Trim the gaskets flush with the lower casing bores. (see Figure 36)

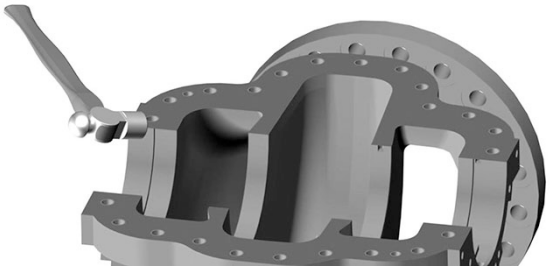

Figure 35: Trimming casing gasket using a bell-peen hammer

CAUTION:

Machined casing bores must remain sharp at the casing parting line. Gaskets must be flush with the bore in order to contact O-rings. Leakage can result around the seal body O-ring if this step is not followed properly.

5. Prepare to assemble the impeller key in the shaft key slot.

   NOTE: For impeller with rings, replace complete impeller and wear ring assembly.

   NOTE: The shaft will be inserted from the outboard end.

6. Check the impeller and casing to determine the correct rotational relationship. Heat the impeller evenly to a maximum temperature of 300°F (149°C) to expand the bore. (Impeller may be pressed onto the shaft instead of heating if a suitable press is available, see Figure 37)

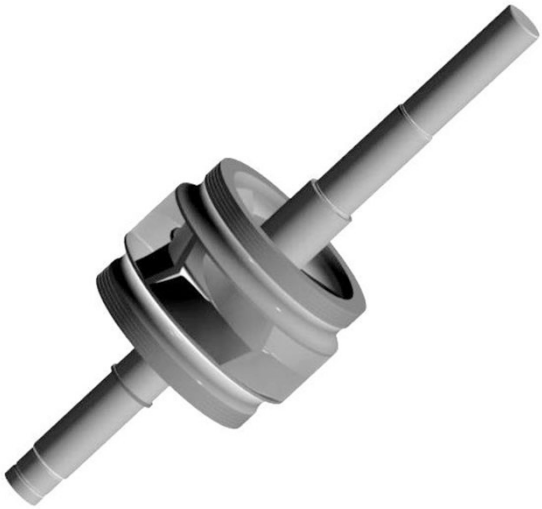

Figure 36: Impeller pressed onto shaft

7. Using gloves, from the outboard end, slide the impeller on the shaft against the shaft shoulder, and install the retaining ring.
8. Slide the casing rings over the impeller (for casing wear ring option)
9. Thoroughly clean the seal end cover and seal bodies (stuffing boxes) to prevent dirt from entering the seal during startup.
10. Press the stationary mechanical seal seats, with anti-rotational pins inserted and O-ring attached, into both of the seal end covers. Lightly lubricate the Seal end cover to ease assembly. (see Figure 38)

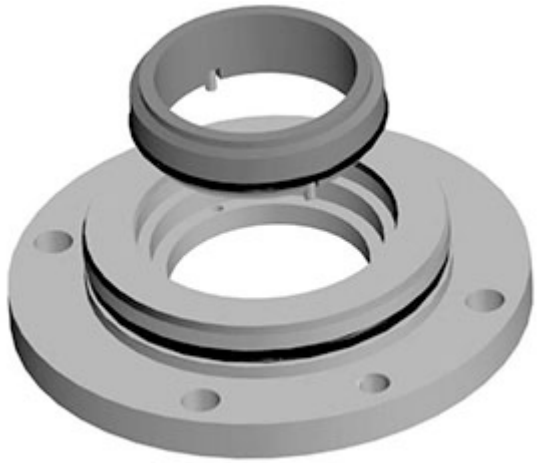

Figure 37: Mechanical seal seat and seal end cover (seal gland) assembly

11. Lubricate and roll the O-rings into the grooves in each of the seal end cover.
12. Press the seal end covers into the seal bodies and secure using the capscrews. (see Figure 39)

    NOTE: Because of the compression of the O-ring, it may be difficult to press the O-ring into the seal body. Use longer capscrews to start the seal end cover into the seal body. To prevent the mechanical seal spring from pushing the seal end cover back out of the seal body, remove one long capscrew at a time and replace with a regular capscrew.
13. Lubricate and roll the O-rings into the grooves in each seal body. (see Figure 39)

    NOTE: At this point, reassemble the rotating element by starting on the outboard end first (the end opposite the coupling) as this end locates the settings of the mechanical seal.

    IMPORTANT: Steps 12 through 29 must be completed, on the outboard end, within 10 to 12 minutes to assure proper placement of the mechanical seals.

Figure 38: Seal end cover (seal gland) and O-rings installed onto seal body (stuffing box)

14. Lightly coat the outboard end of the pump shaft with P-80 Rubber Lubricant Emulsion, vegetable oil, or equal and, after inspecting the seal for damages, slide the mechanical seal head onto the shaft. (see Figure 40)

    NOTE: For MR1 seals tighten the set screw on the rotation ring.

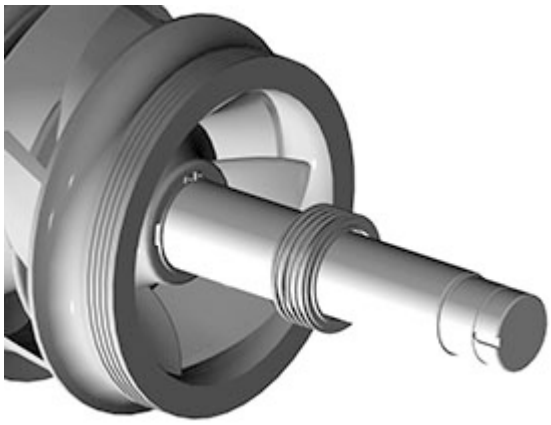

Figure 39: Mechanical seal head installed on shaft

15. Slide the seal body, with the seal end cover, fully on the shaft, being very careful that the head and seat of the mechanical seal do not get damaged. Compress the seal springs only as far as required for installing the bearings. (see Figure 41)

Figure 40: Seal body (stuffing box) with seal gland installed on shaft

NOTE: Steps 16-18 should be completed in the order demonstrated within Figure 42.

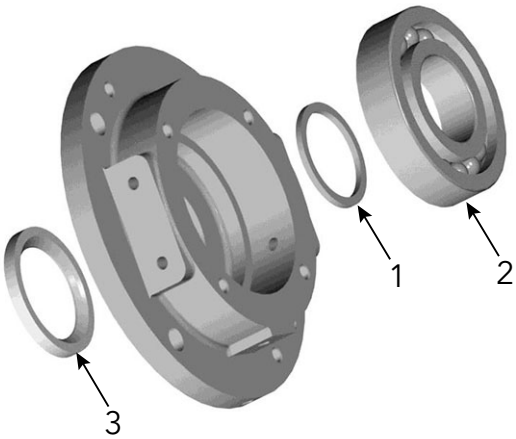


Figure 41: Bearing housing assembly order

16. Place the shoulder ring (item 1) into the bearing housing.

NOTE: Use approximately .5 ounces (15 grams) of thick grease to center and hold the shoulder ring in the middle of the bearing body.

17. Press the bearing (item 2) into the bearing body until it sits flush against the inner shoulder of the bearing body.
18. Press a new lip seal (item 3) into the bearing body. Before installing the lip seal, lubricate the lip seal with lightweight oil.

    NOTE: Lip seals should sit against the machines shoulder in the bearing body. The lip seal should face away from the mechanical seal seat. (see Figure 43)

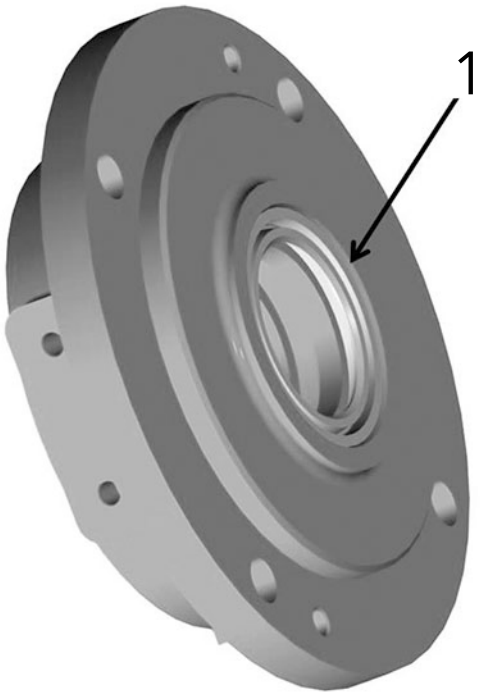


Figure 42: Lip seal installed inside bearing housing

1. Lip seal

19. Heat the bearing body assembly with an induction heater.

    NOTE: Steps 20 through 23 are time sensitive and must be completed as quickly as possible.

CAUTION:

Do not exceed a temperature of 212°F (100°C).

NOTE: Steps 21 through 23 may require two or more people to be performed safely if no hoisting equipment is available. The procedure can be accomplished by one person if hoisting or lifting equipment is provided. Ensure insulated gloves are worn during this procedure.

20. Have at least one person hold the heated bearing body assembly close to the shaft. Align the center of the bearing with the center of the shaft.
21. Using a tool such as a screwdriver or a small pair of pliers, the second person should lift the shoulder ring that is inside the bearing body and align it to the center of the shaft if the bearing collar is misaligned.
22. Together, both assemblers need to slide the bearing body assembly and shoulder ring onto the shaft. Ensure that the shoulder ring sits flush against the machined shoulder of the shaft and that the bearing body contacts the seal body.
23. Tighten all cap screws on the bearing body.

24. Install the locknut and lockwasher on the outboard (opposite of coupling) end of the shaft. Make certain that the locknut is secure and bend over the tabs on the lockwasher. (see Figure 44)

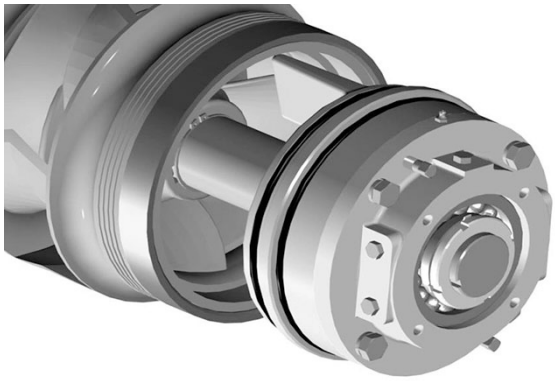

Figure 43: Lockwasher and locknut installed on outboard (opposite of coupling) end of rotating assembly

25. Allow the bearing to cool to room temperature. Coat the exposed side of the bearing with two or three ounces (60 gm or 85 gm) of recommended grease.
26. Install bearing gasket between bearing body and bearing cap.
27. Install bearing gland onto bearing body and alternately tighten the bearing gland capscrews so as not to "cock" the bearing gland causing bearing to bind. (see Figure 45)

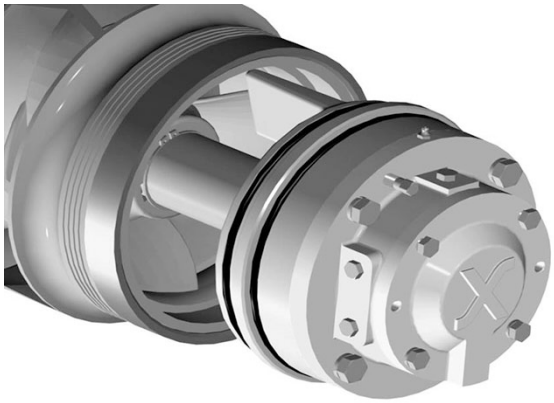

Figure 44: Bearing gland installed on bearing body

28. Repeat steps 9 through 28 for the inboard.

    NOTE: A locknut, lockwasher and shoulder rings are not installed on the inboard end of the pump shaft.
29. Reinstall the coupler on the end of the shaft.
30. Set the rotating element in the pump casing, assuring correct rotation. Locate both seal body tongues in their respective casing grooves. Locate the pins in the seal body and casing wear ring in their respective slots at the casing parting surface. Correct any O-ring bulging. (see Figure 46)

CAUTION:

Do not cut or damage the O-rings when lowering the rotating element into position. When all anti-rotation pins are located correctly, there will be some casing ring looseness.

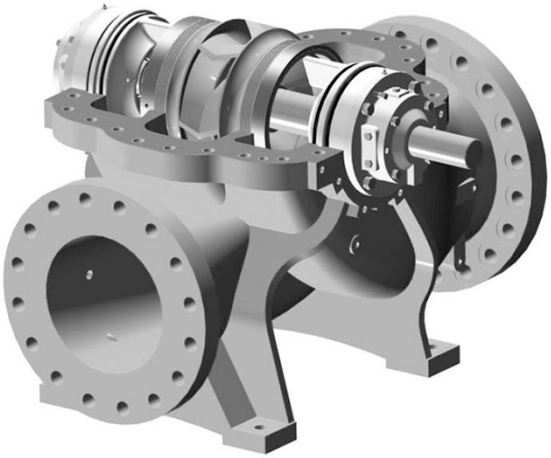

Figure 45: Rotating assembly installed within lower casing

31. Locate the upper half of the casing into place using the tapered dowel pins and install the casing main joint bolts (see Figure 47). The casing joints should be tightened according to the torques listed in section 6.10 Screw Torque Values.

    NOTE: Proper application of torque values is essential for obtaining proper gasket compression so no leakage can occur at the main joint.

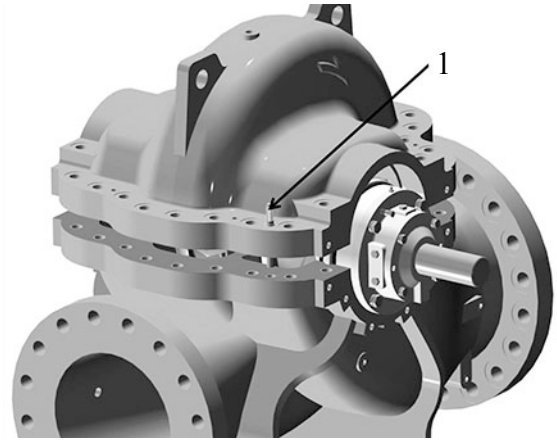


Figure 46: Upper casing alignment and installation via tapered pins

1. Tapered pin

32. Rotate the shaft to ensure that it turns smoothly and it is free from rubbing or binding.
33. Assemble the coupling and check alignment, following instructions found in the "Coupling Alignment" section of this manual (section 4.3). Replace the coupling guard.

### 6.6.4 Install the hex coupling guard

WARNING:

If the pump, motor, or piping is operating at extremely high or low temperatures, guarding or insulation is required. Failure to follow these instructions can result in serious personal injury or death, or property damage.

1. Refer to Figure 48 for the following assembly instructions.
2. Install the pedestal [8] components of the coupling guard assembly onto the baseframe by locating their attachment points to the correct baseframe fastening locations.

3. Install the lower support L-brackets [7] onto the pedestal [8] components by fastening the shorter face of the L-bracket to the top of the pedestal with a hex bolt [9], washer [10], lockwasher [11] and hex nut [12].
4. Attach the guard supports [3-6] to the longer faces of the L-brackets [7] with a hex bolt [9]. The hex bolt will feed into the weld nut that is fixed onto one of the guard support brackets for each pair of supports.
5. Rest the flanges of the lower hex guard covers [1 & 2] onto the upper support brackets. Ensure the inner guard cover [1] is correctly telescoped within the outer guard [2] cover.
6. Couple the lower halves of the inner and outer guard assemblies [1 & 2] together by fastening the outer guard assembly onto the inner assembly using a hex head bolt [9].
7. Similar to step 5, align the upper halves of the guard assemblies to their lower halve counterparts and couple the upper assemblies together via hex head bolts [9].
8. Secure the upper half of the guard assembly to the lower guard assembly by inserting a hex head bolt [9] through the aligned slots of the guard flanges and tightening them into the upper guard supports [3-6].
9. Ensure the guard assemblies are telescoped to the proper length such as to prevent contact with rotating pump equipment.

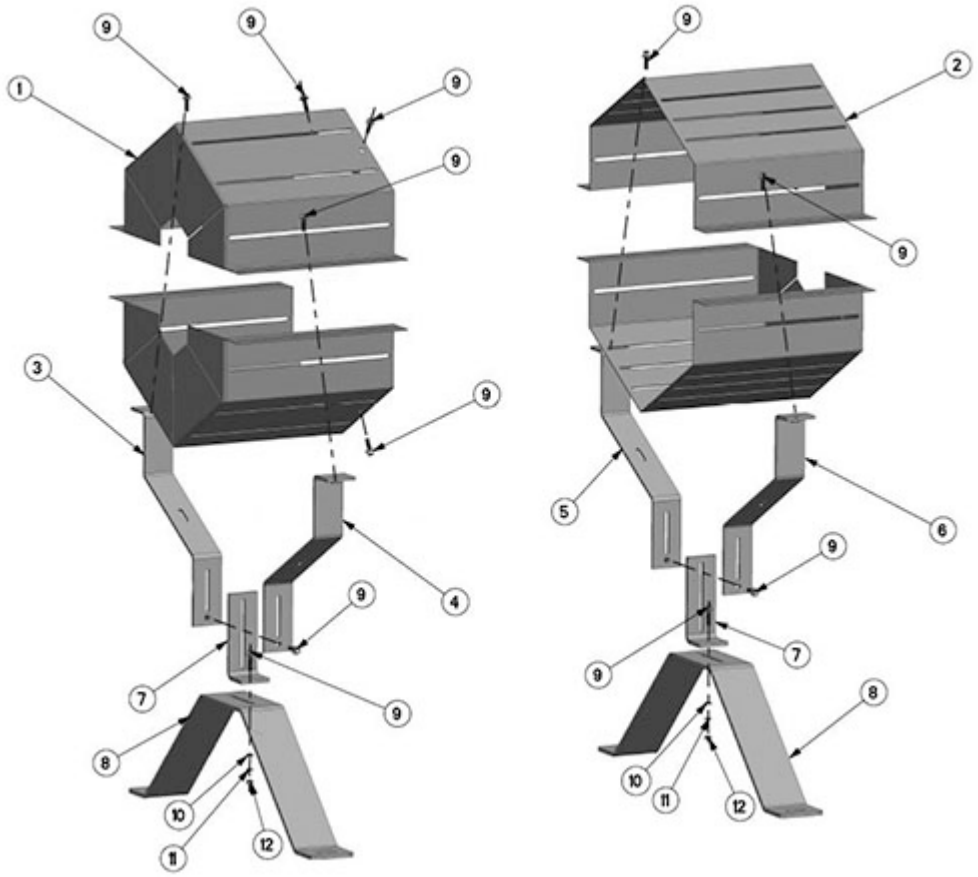


Figure 47: Coupling guard exploded view

| Legend | Part Name |
|---|---|
| 1 | Coupler Guard Assembly Inner |
| 2 | Coupler Guard Assembly Outer |
| 3 | Guard Support Pump Side Left |
| 4 | Guard Support Pump Side Right |
| 5 | Guard Support Motor Side Left |

| Legend | Part Name |
|---|---|
| 6 | Guard Support Motor Side Right |
| 7 | Guard Support Lower |
| 8 | Pedestal |
| 9 | Hex Bolt |
| 10 | Washer |
| 11 | Lock Washer |
| 12 | Hex Nut |

### 6.6.5 Pump assembly for pumps with drop-in stuffing box and sleeve over shaft (dry shaft) design

- All bearings, O-rings, seals and gaskets should be replaced with new parts during reassembly. Any other parts that are reused should be thoroughly cleaned before reassembly.
- The main casing joint gasket should be trimmed according to the parting flange profile of the lower casing. Ensure the gasket is flush with the inside edges of the casing. Spray 3M Super 77 adhesive on the lower casing parting flange for better gasket adhesion.
- For all assembly instructions, assemble from the outboard (non-drive end) of the pump unless stated otherwise.

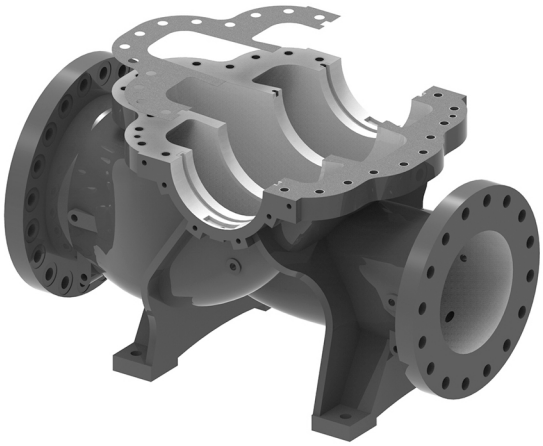

#### Impeller assembly

1. Place the impeller key(s) in the shaft key slot.
2. Apply anti-seizing agent along the entirety of the shaft length.
3. Place the impeller on V-blocks or stands such that the impeller bore direction is parallel to the ground. The shaft will be horizontally inserted into the impeller bore.
4. Check the impeller and casing to determine the correct rotational relationship. Insert the outboard (non-driving end) of the shaft into the impeller bore horizontally using a rubber mallet to gently tap the shaft in until the impeller is centered along the impeller key length.
5. Lightly grease casing wear ring O-rings and roll them into their respective grooves. Insert two steel pins into each casing wear ring. Slide the casing wear rings over the impeller eye.

6. Thoroughly clean stuffing boxes, seal glands, and shaft sleeves to prevent dirt from entering the seal during startup.

**MR2 and MR4 mechanical seal on sleeve**

1. Place the impeller hub gasket against the impeller hub. Ensure the gasket sits flush against the hub.
2. Slide impeller hub sleeve against impeller hub. Ensure the keyway slot within the impeller hub sleeve aligns with the impeller keyway. Ensure the end of the impeller

hub sleeve that has a filet faces away from the impeller. Otherwise, sharp sleeve edges may destroy the sleeve O-ring and ruin the sleeve's seal.

3. Place sleeve O-ring onto shaft adjacent to impeller hub sleeve.
4. Lightly grease the stuffing box O-rings and place them into their respective grooves along the outer diameter of the stuffing box. Thread in the plug at the top of the stuffing box.
5. Slide the stuffing box onto the shaft until it rests against the impeller hub sleeve.
6. Place the mechanical seal's drive ring on the shaft sleeve. Tighten the set screws on the drive ring at the inscribed location on the shaft sleeve.

   Note: The face of the drive ring furthest away from the impeller should be aligned with the inscribed line.
7. Slide the non-keyed end of the shaft sleeve, with drive ring installed, onto the shaft until it sits against the impeller hub sleeve.
8. Insert the heterotype key between the shaft sleeve and shaft.
9. Slide tab washer onto shaft against the shaft sleeve.
10. Thread the locknut onto the shaft. Align tab washer prongs with sleeve nut gaps. Bend tab washer prongs over the sleeve nut gaps to secure the locknut.

11. Repeat steps 1-10 for the inboard side of the pump.
12. Assemble the stationary face of the mechanical seal to the seal gland using its alignment pins as a guide.
13. Place the seal gland O-ring into its respective groove.
14. Slide the rotating element of the mechanical seal onto the shaft until it sits flush against the drive ring.
15. Slide the seal gland and stationary mechanical seal element assembly onto the shaft. Secure the seal gland to the stuffing box using with correctly sized hex head bolts and lockwashers.
16. Thread the external flush line fitting into the top of the seal gland.

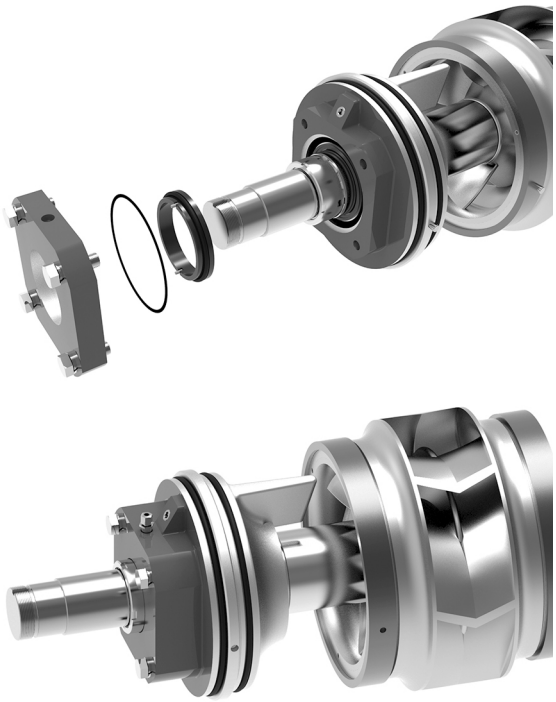

17. Repeat for the inboard side of the pump.
18. Install stuffing box pins into each stuffing box.
19. Ensure pins are installed into each casing wear ring. Align casing wear ring pins to their respective grooves within the lower casing.

NOTE: If pump is removed from operating area and disconnected from piping, proceed to step 20. If the pump is not disconnected from its piping, follow *Bearing and bearing housing assembly* on page 57 and lower the entire rotating assembly, including bearing housings, into the pump. Once lowered into the pump, fasten the bearing housing to the pump casing. See the next two images for rotating assembly installation with bearing housings.

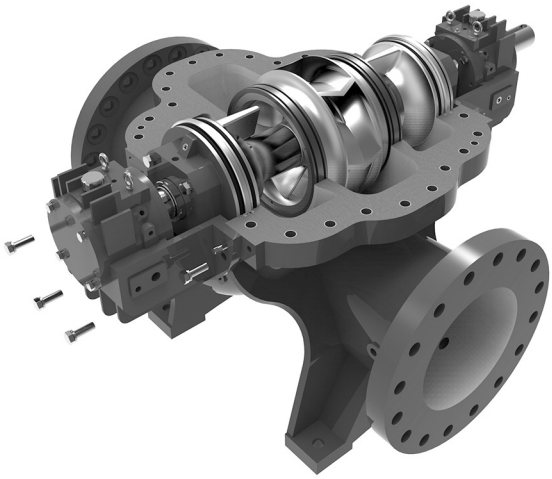

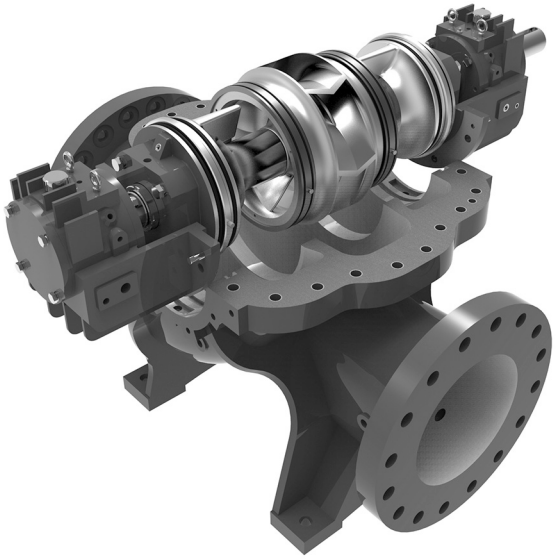

20. Lift the rotating assembly and install it within the lower casing. Ensure all pins rest within their respective grooves.

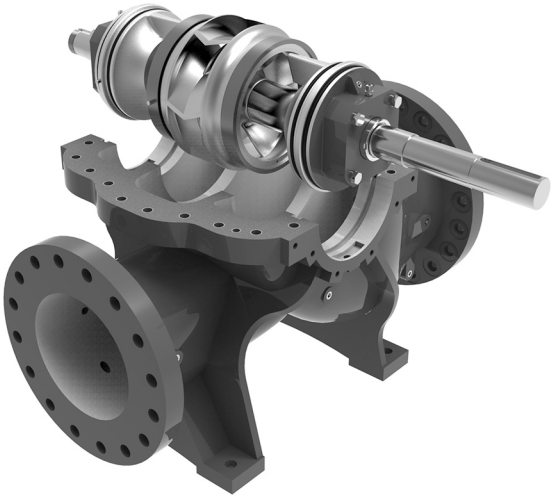

21. Continue the assembly process by following the instructions outlined in *Bearing and bearing housing assembly* on page 57.

### Bearing and bearing housing assembly

1. Prepare the bearing seal ring for installation. Lubricate O-ring and install into the groove located along the inner diameter of the bearing seal ring.

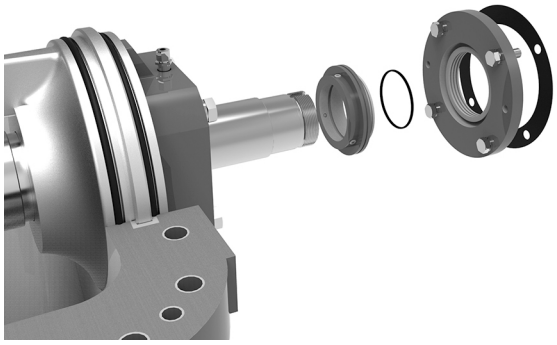

2. Insert the bearing seal ring into the bearing gland.
3. Place bearing gland gasket on the gland face opposite of the bearing seal ring.
4. Insert screws and washers into the bearing gland such that the heads of the screws sit opposite of the gasket.
5. Place bearing gland assembly onto shaft where the bearing seal ring faces the impeller.

   Note: Ensure the smaller diameter holes of the bearing gland are oriented horizontally to orient the grease and drainage ports of the gland correctly.

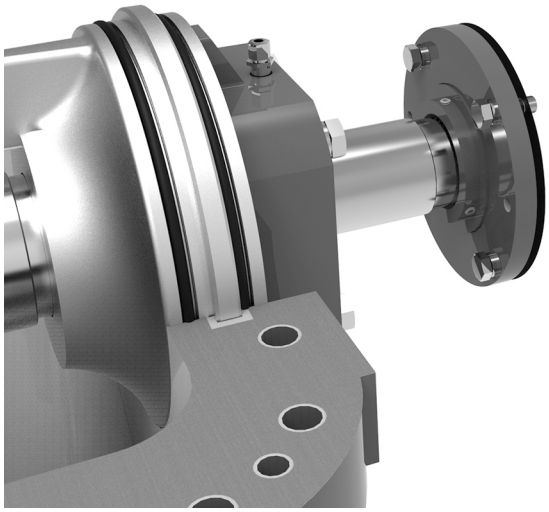

6. Place the bearing shoulder ring against the outboard end shaft step.
7. Heat the ball bearing to expand the bore.
8. Using insulated gloves, install the bearing onto the shaft against the shoulder ring. Allow the bearing to cool. Coat the exposed side of the bearing with two to three ounces (60 to 85 gm) of grease.
9. Slide tab washer adjacent to bearing.
10. Thread the locknut onto the shaft adjacent to the tab washer. Secure the locknut by bending the washer tabs over the grooves on the locknut.

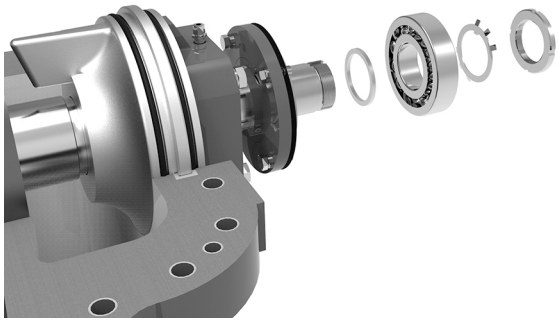

11. Prepare lifting equipment to install the bearing housing. Screw in lifting eyebolts into the top of the bearing housing. Lift the bearing housing and place it around the shaft. Align housing flange with lower casing.
12. Screw the bearing housing into the lower casing. Thread in the jacking screws for future use and to prevent thread corrosion.

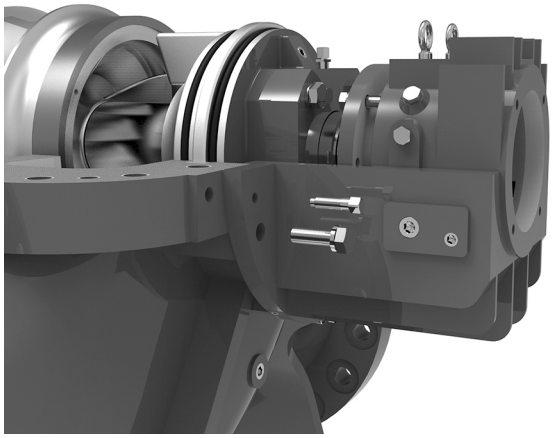

13. Insert grease cup into the top of the bearing housing.
14. Insert drain plug into the bottom of the bearing housing.

    Note: If using oil lubrication, see *Oil lubrication for bearings assembly* for the alternative assembly process.

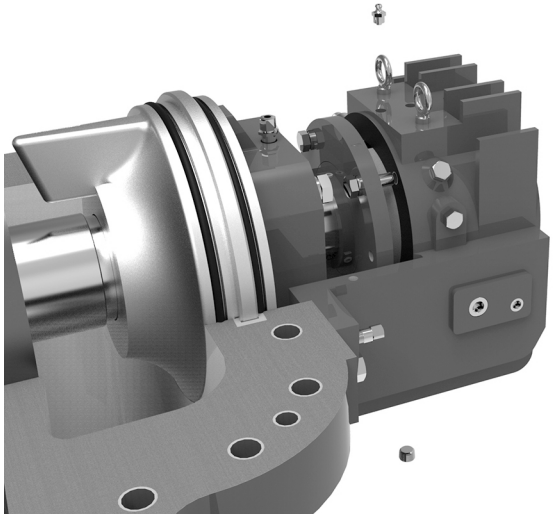

15. Plug remaining openings of the bearing housing unless vibration and temperature sensors will be installed at the end of the pump assembly.
16. Slide bearing gland, gasket and bearing seal ring against the bearing housing. Tighten the bearing gland bolts.

    Important: Do not tighten bearing seal ring set screws until the inboard bearing housing assembly is fixed to the pump. Tightening the seal ring set screws requires the shaft to be rotated. Rotating the shaft with unbalanced loading can cause property damage.
17. Fasten the outboard bearing gland (end cap) with its gasket to the bearing housing.
18. Repeat steps 1-16 for the inboard bearing housing.

    Note: Omit steps 6, 9 and 10.
19. Repeat steps 1-3 for the inboard bearing gland and seal ring. Install the bearing gland assembly onto the inboard face of the inboard bearing housing.

20. Check the seating of all three bearing seal rings and ensure they are firmly seated into their respective bearing glands.

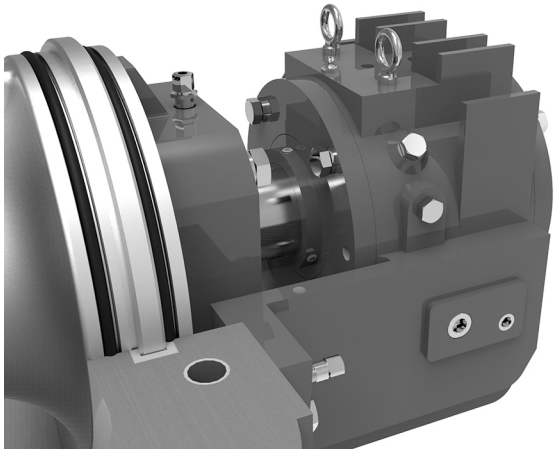

21. Starting from the outboard end, tighten the bearing seal ring set screws. Rotate the shaft to access each set screw.
22. Grease the bearings according to *Regrease the bearings* on page 34.

### Upper casing assembly

1. Insert tapered pins into the upper casing.
2. Using proper lifting equipment, place the upper casing onto the lower casing using the tapered pins for alignment.

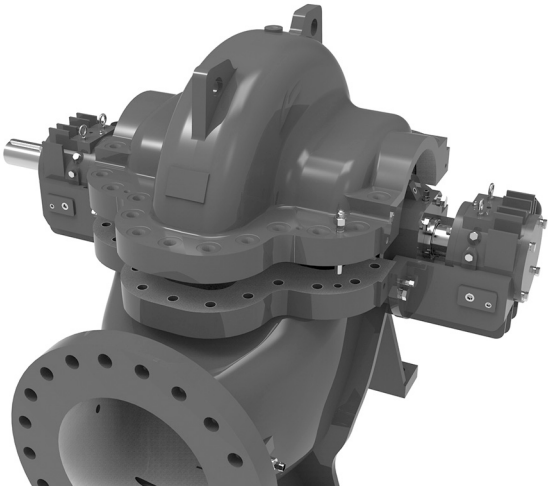

3. Once placed, fasten the four large casing bolts and washers located near the stuffing boxes in an alternating fashion.

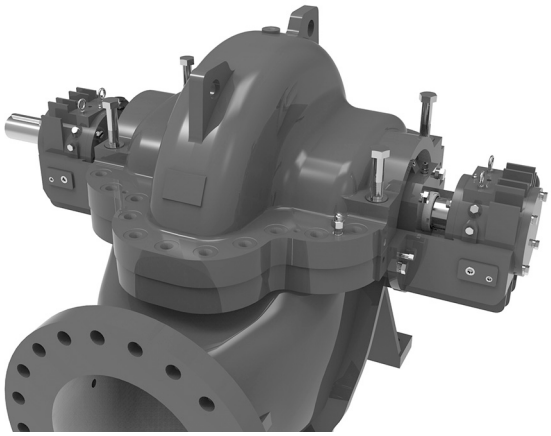

4. Fasten the remaining casing bolts and washers to the torque values specified in *Screw torque values* on page 63.

   Important: It is important to apply the correct amount of torque to the casing bolts to establish a proper seal at the parting flange.

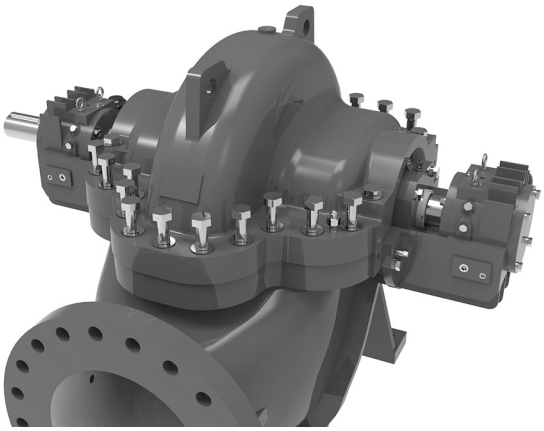

5. Thread in the casing jacking screws for future use and to prevent thread corrosion.

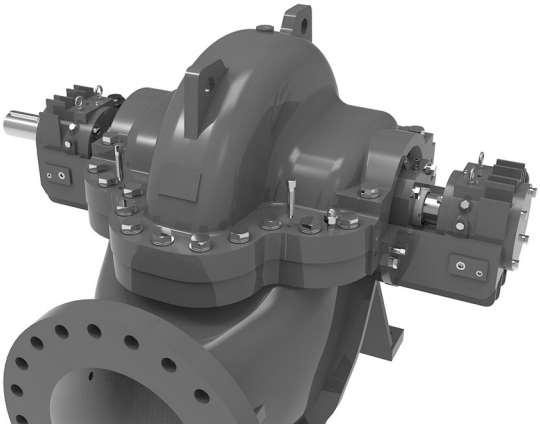

Shaft guard and flush line assembly

6. Place each shaft guard around the exposed shaft between the bearing housing and seal chamber. Align the slots on either side of the shaft guard with the holes located near the bearing housing flange.
7. Fasten the shaft guards to the bearing housing.

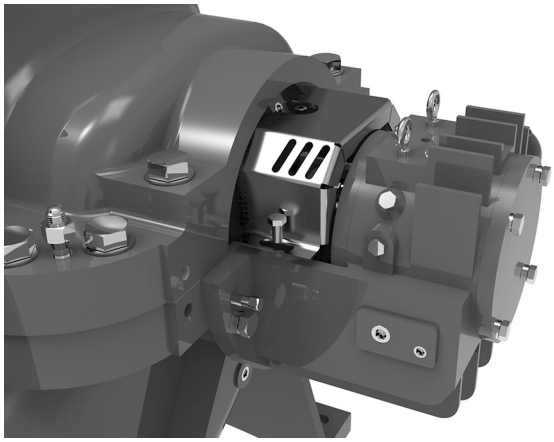

8. Fasten the four arm tube into the top of the upper casing.
9. Insert the appropriate plug into the top of the four arm tube.
10. Attach valves to the remaining two arms of the four arm tube.

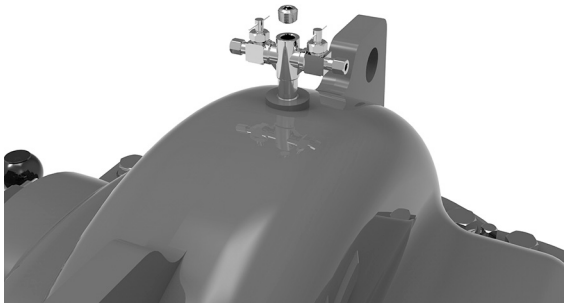

11. Route the flush line piping between the valve and the bite-type fitting located on top of the seal gland. Ensure connections are secure and water-tight.

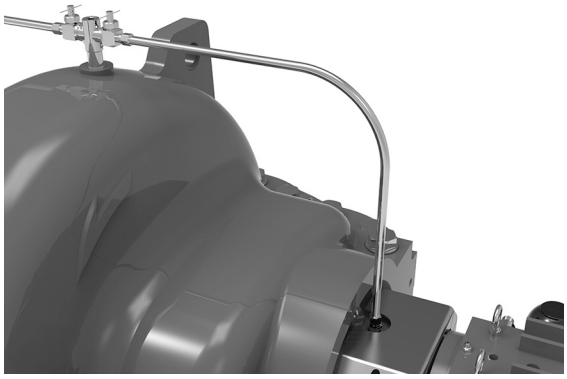

12. Unless installing pressure sensors, ensure all plugs located on either side of the lower casing are inserted.

## 6.7 Change the rotation

WARNING:

- Always disconnect and lock out power before servicing to prevent unexpected startup. Failure to do so could result in death or serious injury.
- Electrical connections must be made by certified electricians in compliance with all international, national, state, and local rules.
- Never operate a pump without a properly installed coupling guard. Personal injury will occur if you run the pump without a coupling guard.

1. Remove the pump from the base.
2. Follow the Disassembly procedures applicable to the pump.

   You only need to remove one of the bearing glands (bearing caps), bearing housings, and seal bodies (stuffing boxes) in order to change the rotation.
3. Press the press-fitted impeller off of the shaft.
4. Observe the direction in which the vane tips are pointing (see Figure 49).
5. Turn the impeller 180° and press it back onto the shaft.
6. Check that the vane tips point in opposite directions.
7. Reinstall the rotating assembly.

   Refer to *Pump assembly for pumps with drop-in stuffing box and sleeve over shaft (dry shaft) design* on page 53 for instructions regarding reinstallation.
8. Check the impeller-to-volute relationship.
9. Complete the reassembly.

   Unless the motor rotation is reversed, the impeller will run backward. Check the motor for proper rotation before you place the pump back in service.

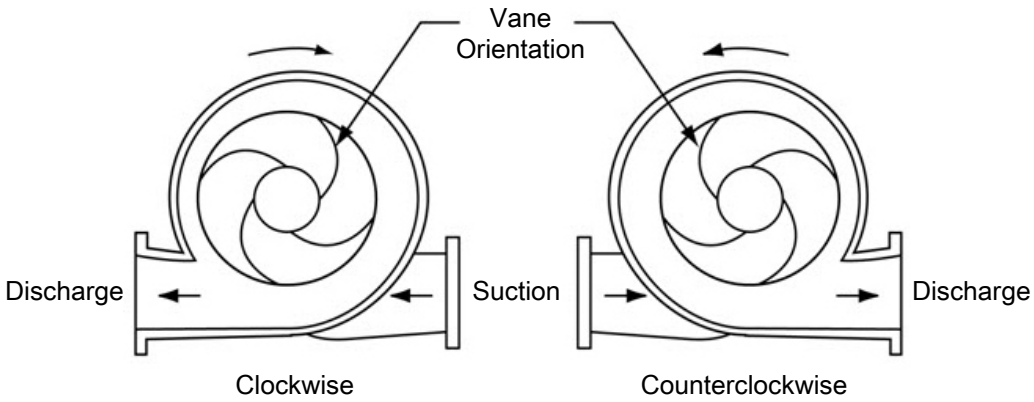


Figure 48: Impeller rotation orientation diagram viewed from drive end

## 6.8 Screw torque values

Capscrew torque in ft-lb (Nm)

*The M6 set screw has a rating of 10 N m.

| Size | Metric Class 8.8 |
|---|---|
| M10 | 33.2 (45) |
| M12 | 57.5 (78) |
| M16 | 142 (193) |
| M20 | 277 (376) |
| M24 | 480 (651) |
| M30 | 954 (1293) |
| M36 | 1666 (2259) |

## 6.9 Dealer servicing

If trouble occurs that cannot be rectified, contact your local sales and service representative and be prepared to provide this information:

1. Complete nameplate data of pump and motor
2. Suction and discharge pipe pressure gauge readings
3. Ampere draw of the motor
4. A sketch of the pump hook-up and piping

# 7 Troubleshooting

## 7.1 Operation troubleshooting

Between regular maintenance inspections, be alert for signs of motor or pump trouble. Correct any trouble immediately and avoid costly repair and shutdown.

| Symptom | Cause | Remedy |
|---|---|---|
| No liquid delivered | Lack of prime | Fill pump and suction pipe completely with liquid. |
| | Loss of prime | Check for leaks in suction pipe joints and fittings; vent casing to remove accumulated air. |
| | Suction lift too high. | If no obstruction at inlet, check for pipe friction losses. Static lift may be too great. Measure with mercury column or vacuum gauge while pump operates. If static lift is too high, liquid to be pumped must be raised or pump lowered. |
| | Discharge head too high. | Check pipe friction losses. Large piping may correct condition. Check that valves are wide open. |
| | The motor speed is too low. | Check whether motor is directly across-the-line and receiving full voltage. Or frequency may be too low; motor may have an open phase. |
| | Wrong direction of rotation. | Check motor rotation with directional arrow on pump casing. |
| | Impeller completely plugged. | Dismantle pump and clean impeller. |
| Not enough liquid being delivered | Air leaks in suction piping | If liquid pumped is water or other non-explosive, and explosive gas or dust is not present, test flanges for leakage with flame or match, or by plugging inlet and putting line under pressure. A gauge will indicate a leak with a drop of pressure. |
| | The motor speed is too low. | Check whether motor is directly across-the-line and receiving full voltage. Or frequency may be too low; motor may have an open phase. |
| | Discharge head too high | Check pipe friction losses. Large piping may correct condition. Check that valves are wide open. |
| | Suction lift too high | If no obstruction at inlet, check for pipe friction losses. Static lift may be too great. Measure with mercury column or vacuum gauge while pump operates. If static lift is too high, liquid to be pumped must be raised or pump lowered. |
| | Impeller partially plugged | Dismantle pump and clean impeller. |

| Symptom | Cause | Remedy |
|---|---|---|
| | Cavitation; insufficient NPSH (depending on installation) | 1. Increase positive suction head on pump by lowering pump.<br>2. Sub-cool suction piping at inlet to lower entering liquid temperature.<br>3. Pressurization suction vessel. |
| | Defective impeller. | Inspect impeller, bearings and shaft. Replace is damaged or vane sections badly eroded. |
| | Foot valve too small or partially obstructed. | Area through ports of valve should be at least as large as area of suction pipe – preferable 1½ times. If strainer is used, net clear area should be 3 to 4 times area of suction pipe. |
| | Suction inlet not immersed deep enough. | If inlet cannot be lowered, or if eddies through which air is sucked persist when it is lowered, chain a board to suction pipe. It will be drawn into eddies, smothering the vortex. |
| | Too small impeller diameter. Probable cause if none of above) | Check with factory to see if a larger impeller can be used; otherwise, cut pipe losses or increase speed – or both, if needed. Be careful not to seriously overload drive. |
| Not enough pressure | Mechanical defects | See "Defective impeller" and "Foot valve too small or partially obstructed". |
| | Obstruction in liquid passages. | Dismantle pump and inspect passages of impeller and casing. Remove obstruction. |
| | Air or gases in liquid. (Test in laboratory, reducing pressure on liquid to pressure in suction line. Watch for bubble formation.) | May be possible to over rate pump to point where it will provide adequate pressure despite condition. Better to provide gas separation chamber on suction line near pump, and periodically exhaust accumulated gas. See "Cavitation; insufficient NPSH". |
| | Too small impeller diameter. (Probable cause if none above.) | Check with factory to see if a larger impeller can be used; otherwise, cut pipe losses or increase speed – or both, if needed. Be careful not to seriously overload drive. |
| Pump operates for short time, then stops | Incomplete priming. | Free pump, piping and valves of all air. If high points in suction prevent this, they need correcting. |
| | Suction lift too high. | If no obstruction at inlet, check for pipe friction losses. Static lift may be too great. Measure with mercury column or vacuum gauge while pump operates. If static lift is too high, liquid to be pumped must be raised or pump lowered. |

| Symptom | Cause | Remedy |
|---|---|---|
| | Air leaks in suction piping. | If liquid pumped is water or other non-explosive, and explosive gas or dust is not present, test flanges for leakage with flame or match, or by plugging inlet and putting line under pressure. A gauge will indicate a leak with a drop of pressure. |
| | Air or gasses in liquid. | May be possible to over rate pump to point where it will provide adequate pressure despite condition. Better to provide gas separation chamber on suction line near pump, and periodically exhaust accumulated gas. See "Cavitation; insufficient NPSH". |
| Pump takes too much power | Head lower than rating; thereby pumping too much liquid. | Machine impeller's OD to size advised by factory. |
| | Cavitation | 1. Increase positive suction head on pump by lowering pump.<br>2. Sub-cool suction piping at inlet to lower entering liquid temperature.<br>3. Pressurization suction vessel. |
| | Mechanical defects | See "Defective impeller" and "Foot valve too small or partially obstructed". |
| | Suction inlet not immersed enough. | If inlet cannot be lowered, or if eddies through which air is sucked persist when it is lowered, chain a board to suction pipe. It will be drawn into eddies, smothering the vortex. |
| | Liquid heavier (in either viscosity or specific gravity) than allowed for. | Use larger driver. Consult factory for recommended size. Test liquid for viscosity and specific gravity. |
| | Wrong direction of rotation. | Check motor rotation with directional arrow on pump casing. |
| | Casing distorted by excessive strains from suction or discharge piping. | Check alignment. Examine pump for friction between impeller and casing. Replace damaged parts. |
| | Shaft bent due to damage – through shipment, operation, or overhaul. | Check deflection of rotor by turning on bearing journals. Total indicator run-out should not exceed 0.002 on shaft and 0.004 on impeller wearing surface. |
| | Mechanical failure of critical pump parts. | Check bearings and impeller for damage. Any irregularity in these parts will cause a drag on shaft. |
| | Misalignment | Realign pump and driver. |
| | Speed may be too high (brake hp of pump varies as the cube of the speed; therefore, any increase in speed means considerable increase in power demand). | Check voltage on motor. |

| Symptom | Cause | Remedy |
|---|---|---|
| | Electrical defects. | The voltage and frequency of the electrical current may be lower than that for which the motor was built; or there may be defects in motor. The motor may not be ventilated properly due to poor location. |
| | Mechanical defects in turbine, engine or other type of drive exclusive of motor. | If trouble cannot be located, consult factory. |

# 8 Parts Listings and Exploded View

## 8.1 Standard mechanical seal cross-sectional drawings

MR2 mechanical seal

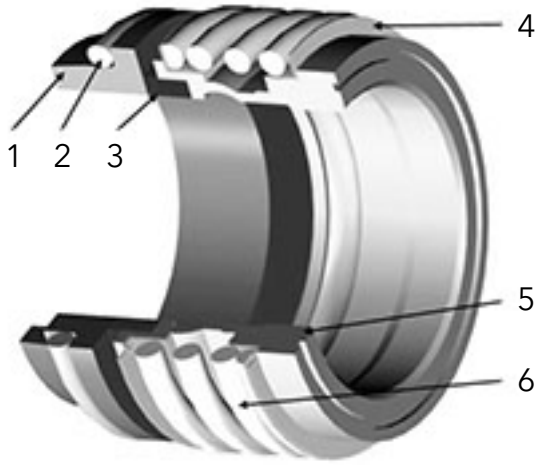


| Legend | Description | Material |
|---|---|---|
| 1 | Fixed Assembly | Silicon carbide |
| 2 | O-Ring | EPDM |
| 3 | Rotating Assembly | Carbon, Silicon carbide |
| 4 | Spring Retainer | 18-8 SS |
| 5 | Elastomer Rotary Seal Assembly | EPDM, FKM |
| 6 | Spring | 18-8 SS |

MR1 mechanical seal

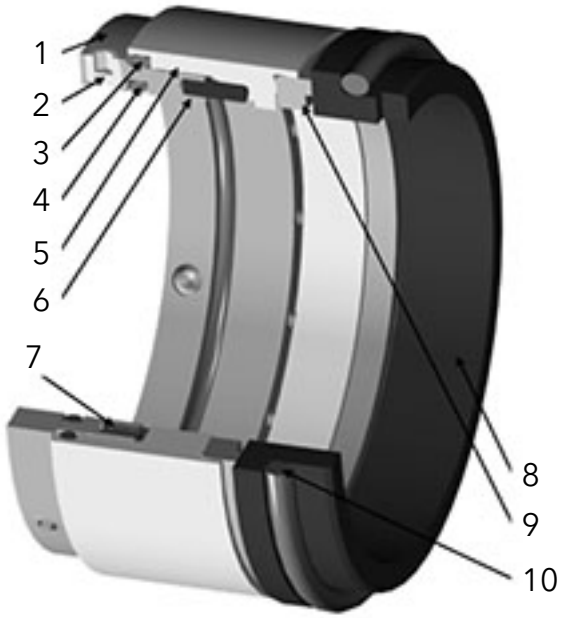


| Legend | Description | Material |
|---|---|---|
| 1 | Drive Ring | AISI 316 |

| Legend | Description | Material |
|---|---|---|
| 2 | Set Screw | AISI 316 |
| 3 | O-Ring | EPDM |
| 4 | O-Ring | EPDM |
| 5 | Seal Bracket | 18-8 SS |
| 6 | Pin | AISI 316 |
| 7 | Coil Spring | AISI 316 |
| 8 | Fixed Assembly | Silicon carbide |
| 9 | Rotating Assembly | Carbon, Silicon carbide |
| 10 | O-Ring | EPDM |

## e-HSC exploded view

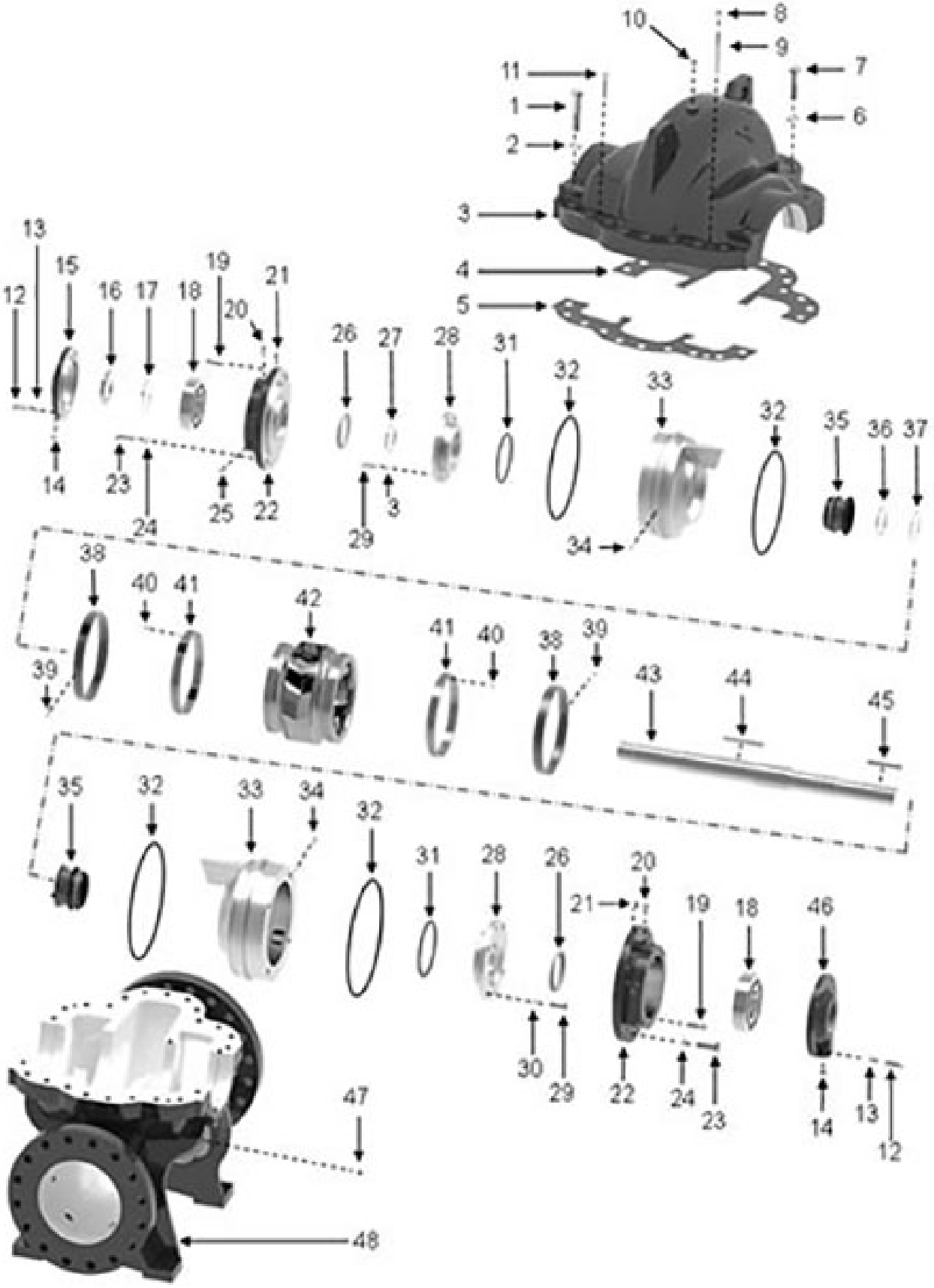

| Legend | Description | Quantity | Legend | Description | Quantity |
|---|---|---|---|---|---|
| 1 | Large casing bolt | 4 | 25 | Bolt | 8 |
| 2 | Casing washer | 4 | 26 | Lip seal | 2 |
| 3 | Upper casing | 1 | 27 | Shoulder ring | 2 |
| 4 | Paper pad inlet (casing) | 1 | 28 | Seal gland | 2 |
| 5 | Paper pad outlet (gasket) | 1 | 29 | Bolt | 8 |
| 6 | Casing washer | * | 30 | Washer | 8 |
| 7 | Casing bolt | * | 31 | O-ring (seal gland) | 2 |
| 8 | Nut | 2 | 32 | O-ring (stuffing box) | 4 |
| 9 | Tapered pin | 2 | 33 | Stuffing box | 8 |
| 10 | Plug | 1 | 34 | Pin | 2 |
| 11 | Jacking screw | 4 | 35 | Mechanical seal | 2 |
| 12 | Bolt | 8 | 36 | Shoulder ring | 1 |
| 13 | Washer | 8 | 37 | Circlip (snap ring) | 1 |
| 14 | Plug | 2 | 38 | Casing wear ring (optional) | 2 |
| 15 | Bearing gland (with gasket) | 2 | 39 | Pin (optional) | 2 |
| 16 | Locknut | 1 | 40 | Screw (optional - set 120° apart) | 6 |
| 17 | Lockwasher | 1 | 41 | Impeller wear ring (optional) | 2 |
| 18 | Deep groove ball bearing | 2 | 42 | Impeller | 1 |
| 19 | Jacking screw | 4 | 43 | Shaft | 1 |
| 20 | Screw | 2 | 44 | Impeller key | 1 |
| 21 | Grease cup | 2 | 45 | Coupling key | 1 |
| 22 | Bearing housing | 2 | 46 | Bearing gland (with gasket) | 1 |
| 23 | Bolt | 8 | 47 | Plug | 10 |
| 24 | Washer | 8 | 48 | Lower casing | 1 |

*Quantity varies based on pump size

# 9 Product Warranty

## 9.1 Commercial warranty

Warranty to Commercial Buyers. Seller warrants the goods sold to any Commercial Buyer ("Buyer") under this Agreement (with the exception of membranes, seals, gaskets, elastomer materials, coatings and other "wear parts" or consumables all of which are not warranted except as otherwise provided in the quotation or sales form) will be (i) built in accordance with the specifications referred to in the quotation or sales form, if such specifications are expressly made a part of this Agreement, and (ii) free from defects in material and workmanship for a period of one (1) year from the date of installation or eighteen (18) months from the date of shipment, which date of shipment shall not be delayed by Buyer by more than thirty (30) days after receipt of notice that the goods are ready to ship), whichever shall occur first, unless a longer period is specified in the product documentation (the Warranty). Except as otherwise required by law, Seller shall, at its option and at no cost to Buyer, either repair or replace any good(s) which fails to conform with the Warranty provided Buyer gives written notice to Seller of any defects in material or workmanship within ten (10) days of the date when any defects or non-conformance are first manifest, except in circumstances that are, or are reasonably foreseeably, urgent or exigent, in which case Buyer will provide Seller with immediate notice. Under either the repair or replacement option, Seller shall not be obligated to remove or pay for the removal of the defective product or install or pay for the installation of the replaced or repaired product and Buyer shall be responsible for all other costs, including, but not limited to, service costs, shipping fees and expenses. Seller shall have sole discretion as to the method or means of repair or replacement. Buyer's failure to comply with Seller's repair or replacement directions shall terminate Seller's obligations under this Warranty and render the Warranty void. Any parts repaired or replaced under the Warranty are warranted only for the balance of the Warranty period. Seller shall have no warranty obligations to Buyer with respect to any product or parts of a product that have been: (a) repaired by third parties other than Seller or without Seller's written approval; (b) subject to misuse, misapplication, neglect, alteration, accident, or physical damage; (c) used in a manner contrary to Seller's instructions for installation, operation and maintenance; (d) damaged from ordinary wear and tear, corrosion, or chemical attack; (e) damaged due to abnormal conditions, vibration, failure to properly prime, or operation without flow; (f) damaged due to a defective power supply or improper electrical protection; (g) damaged resulting from the use of accessory equipment not sold or approved by Seller; or (h) damaged or diminished by use in combination with parts subject to any above cause. In any case of products not manufactured by Seller, there is no warranty from Seller; however, Seller will provide to Buyer any warranty Buyer receives from Seller's supplier of such products.

THE FOREGOING WARRANTY IS EXCLUSIVE AND IN LIEU OF ANY AND ALL OTHER EXPRESS OR IMPLIED WARRANTIES, GUARANTEES, CONDITIONS OR TERMS OF WHATEVER NATURE RELATING TO THE GOODS PROVIDED HEREUNDER, INCLUDING WITHOUT LIMITATION ANY IMPLIED WARRANTIES OF MERCHANTABILITY AND FITNESS FOR A PARTICULAR PURPOSE, WHICH ARE HEREBY EXPRESSLY DISCLAIMED AND EXCLUDED. EXCEPT AS OTHERWISE REQUIRED BY LAW, BUYER'S EXCLUSIVE REMEDY AND SELLER'S AGGREGATE LIABILITY FOR BREACH OF ANY OF THE FOREGOING WARRANTIES ARE LIMITED TO REPAIRING OR REPLACING THE PRODUCT AND SHALL IN ALL CASES BE LIMITED TO THE AMOUNT PAID BY THE BUYER FOR THE DEFECTIVE PRODUCT. IN NO EVENT WILL SELLER BE LIABLE FOR ANY OTHER FORM OF DAMAGES, WHETHER DIRECT, INDIRECT, LIQUIDATED, INCIDENTAL, CONSEQUENTIAL, PUNITIVE, EXEMPLARY OR SPECIAL DAMAGES, INCLUDING BUT NOT LIMITED TO LOSS OF PROFIT, LOSS OF ANTICIPATED SAVINGS OR REVENUE, LOSS OF INCOME, LOSS OF BUSINESS, LOSS OF PRODUCTION, LOSS OF OPPORTUNITY OR LOSS OF REPUTATION.

# Xylem |ˈzīləm|

1) The tissue in plants that brings water upward from the roots;
2) a leading global water technology company.

We're a global team unified in a common purpose: creating advanced technology solutions to the world's water challenges. Developing new technologies that will improve the way water is used, conserved, and re-used in the future is central to our work. Our products and services move, treat, analyze, monitor and return water to the environment, in public utility, industrial, residential and commercial building services settings. Xylem also provides a leading portfolio of smart metering, network technologies and advanced analytics solutions for water, electric and gas utilities. In more than 150 countries, we have strong, long-standing relationships with customers who know us for our powerful combination of leading product brands and applications expertise with a strong focus on developing comprehensive, sustainable solutions.

For more information on how Xylem can help you, go to www.xylem.com

xylem
Let's Solve Water

Xylem Inc.
8200 N. Austin Avenue
Morton Grove IL 60053
Tel: (847) 966–3700
Fax: (847) 965–8379
www.xylem.com/bellgossett

Visit our Web site for the latest version of this document and more information

The original instruction is in English. All non-English instructions are translations of the original instruction.



P6016605_B_en-US_09-2020_e-HSC