xylem
Let's Solve Water

INSTRUCTION MANUAL

P2003509 Rev 2

Technologic Intelligent Pump Controller

Bell & Gossett
a xylem brand

Table of Contents

1 Introduction and Safety....5
1.1 Introduction....5
1.2 Safety....5
1.2.1 Safety message levels....5
1.2.2 Qualified personnel....6
1.2.3 Safety precautions....6
1.3 User safety....8
1.3.1 Wash the skin and eyes....9
1.4 Protecting the environment....9

2 Transportation and Storage....11
2.1 Examine the delivery....11
2.1.1 Examine the package....11
2.1.2 Examine the unit....11
2.2 System lifting....11
2.3 Transportation guidelines....11
2.3.1 Precautions....11
2.4 Storage guidelines....12

3 Product Description....13
3.1 Product overview....13
3.1.1 Conformity, approvals and certifications....13
3.1.2 Abbreviations and standards....13
3.2 Motor thermal protection....14
3.3 Dimensions....19
3.3.1 Frame sizes A2–A5, B1–B4, C1–C4....19
3.3.2 Frame sizes D1–D4, D5, D7....21
3.4 Frame size description....28
3.5 Internal frequency converter controller functions....31

4 Mechanical Installation....32
4.1 Pre-installation....32
4.1.1 Installation site checklist....32
4.1.2 Frequency converter and motor pre-installation check list....32
4.2 General considerations....32
4.2.1 Tools needed....32
4.2.2 Space....33
4.2.3 Wire access....33
4.3 How to get started....33
4.4 Installation requirements....34
4.4.1 Lifting....34
4.4.2 Cooling....35
4.4.3 Mounting....35
4.4.4 Terminal and connection....36
4.4.5 Gland/Conduit entry IP21 (NEMA 1) and IP54 (NEMA12)....39
4.4.6 NEMA-3R cover kit....39
4.4.7 Install the top plate....40
4.4.8 Install the gland plate....40
4.4.9 Install the NEMA 3R cover....42
4.4.10 Piping connections....43
4.4.11 Diaphragm tank, pressure relief valve, and discharge piping....44

4.4.12 Diaphragm tank, system pressure....44
4.4.13 Installing the pressure sensor....44
4.4.14 Underwater connection....44

5 Electrical Installation....46
5.1 Precautions....46
5.1.1 Earth (grounding) requirements....47
5.1.2 Using GFCIs (RCDs)....47
5.2 Basic electrical connection....48
5.3 Motor connection....49
5.3.1 Motor connection for A2 and A3....51
5.3.2 Motor connection for A4 and A5....52
5.3.3 Motor connection for B1 and B2....52
5.3.4 Shielding against electrical noise....53
5.4 Power connection....53
5.4.1 Cable and fusing....53
5.4.2 Shielding of cables....55
5.4.3 Cable-length and cross-section....56
5.4.4 Switching frequency....56
5.5 Power and control wiring for unshielded cables....59
5.6 Grounding....60
5.7 Extra protection (RCD)....61
5.8 Torque....61
5.9 Shielded cables....61
5.10 Control wiring....61
5.11 Control wiring access....61
5.12 Control terminal types....62
5.13 Wiring to control terminals....65
5.13.1 Unplug terminal connectors....65
5.13.2 Control terminal connections....65
5.13.3 Analog input configuration....66
5.13.4 Control terminal functions....67
5.13.5 Analog input 53....67
5.13.6 Using screened control cables....67
5.13.7 Serial communication....68
5.14 Common terminal wiring configurations....69
5.14.1 Relay wiring....69
5.14.2 Pump protect....69
5.14.3 Configuring an additional transducer feedback....71
5.14.4 Speed control through an analog input....72
5.14.5 Control from external PLC/BMS through communications port....74
5.15 Local control panel....75
5.15.1 Controller status....76
5.15.2 LCP Parameters....79
5.15.3 Menu keys....80
5.15.4 Navigation keys....80
5.15.5 Operation keys....81
5.15.6 Status lights....82
5.15.7 Parameter backup....82
5.15.8 Factory Reset/Initialization....83

6 MCO301 Programmable API....84
6.1 Overview....84
6.2 Safety....85
6.3 Basic installation instructions for Option A or Option B cards....85
6.4 Installation instructions for additional enclosure sizes....86
6.4.1 Enclosure Sizes A2, A3, B3, and B4....86

6.4.2 Enclosure Sizes A5, B1, B2, C, D....87
6.5 Wiring the MCO301 Programmable API....88
6.5.1 Option A wiring....88
6.5.2 Option B wiring....90
6.6 Shielding for MCO301 Programmable API....91
6.6.1 Single ground shielding....91
6.6.2 Multiple ground shielding....92
6.7 Troubleshooting the MCO301....93
6.8 Group 19 parameter descriptions....94

7 Operation....104
7.1 Pre-start procedure....104
7.2 Pre-startup inspections....105
7.3 Start-up procedure....105
7.4 Programming the controller....106
7.4.1 Quick Menus....108
7.4.2 My Personal Menu....108
7.4.3 Start-Up Genie (Smart Setup)....113
7.4.4 Main menu....118
7.5 Setup and commissioning....119
7.5.1 Start-Up Genie (Smart Setup) setup....119
7.5.2 Main Menu setup....122
7.5.3 Motor setup....126
7.5.4 Application setup....129
7.5.5 Single Pump Control setup....131
7.5.6 Multipump Control setup....147
7.5.7 Speed Control setup....152
7.5.8 Follower Control setup....155
7.5.9 Test Run Mode setup....158
7.5.10 Multipump setup....160
7.5.11 Feedback setup....180
7.5.12 Setpoint setup....188
7.5.13 Pipe Fill Function setup....192
7.5.14 Flow Compensation setup....195
7.5.15 Pump Protection setup....198
7.5.16 Bypass setup....215
7.5.17 Digital Input setup....218
7.5.18 Relay and Analog Output setup....223
7.5.19 Communication setup....226
7.5.20 Maintenance....228
7.5.21 System start-up....228

8 Warnings and alarms....230
8.1 Warning and alarm types....230
8.2 Warning and alarm displays....230
8.3 Warnings and alarms....240

9 Troubleshooting....249
9.1 Start up and operation troubleshooting....249

10 Technical Specifications....252
10.1 Power-dependent specifications....252
10.2 General technical data....261
10.3 Fuses and circuit breakers....267
10.3.1 NEC (NFPA 70) compliance....267
10.3.2 CE compliance....269
10.3.3 UL compliance....271

10.4 Tightening torques....277
10.5 Wire sizing charts.... 278
10.5.1 VFD input wire sizing.... 279
10.5.2 VFD output wire sizing....283
10.6 Parameter list.... 287

11 Product Warranty....292

1 Introduction and Safety

1.1 Introduction

Purpose of this manual

The purpose of this manual is to provide necessary information for:

- Installation
- Operation
- Maintenance

CAUTION:

Read this manual carefully before installing and using the product. Improper use of the product can cause personal injury and damage to property, and may void the warranty.

NOTICE:

Save this manual for future reference, and keep it readily available at the location of the unit.

1.2 Safety

WARNING:

- The operator must be aware of safety precautions to prevent physical injury.
- Operating, installing, or maintaining the unit in any way that is not covered in this manual could cause death, serious personal injury, or damage to the equipment. This includes any modification to the equipment or use of parts not provided by Xylem. If there is a question regarding the intended use of the equipment, please contact a Xylem representative before proceeding.
- Do not change the service application without the approval of an authorized Xylem representative.

CAUTION:

You must observe the instructions contained in this manual. Failure to do so could result in physical injury, damage, or delays.

1.2.1 Safety message levels

About safety messages

It is extremely important that you read, understand, and follow the safety messages and regulations carefully before handling the product. They are published to help prevent these hazards:

- Personal accidents and health problems
- Damage to the product
- Product malfunction

Definitions

Safety message level	Indication
DANGER:	A hazardous situation which, if not avoided, will result in death or serious injury

Safety message level	Indication
WARNING:	A hazardous situation which, if not avoided, could result in death or serious injury
CAUTION:	A hazardous situation which, if not avoided, could result in minor or moderate injury
Electrical Hazard:	The possibility of electrical risks if instructions are not followed in a proper manner
NOTICE:	• A potential situation which, if not avoided, could result in undesirable conditions • A practice not related to personal injury

1.2.2 Qualified personnel

WARNING:

This product is intended to be operated by qualified personnel only.

- Correct and reliable transport, storage, installation, operation, and maintenance are required for the trouble-free and safe operation of the frequency converter. Only qualified personnel are allowed to install or operate this equipment.
- Qualified personnel are defined as trained staff, who are authorized to install, commission, and maintain equipment, systems, and circuits in accordance with pertinent laws and regulations. Also, the personnel must be familiar with the instructions and safety measures that are described in this document.

1.2.3 Safety precautions

WARNING:

HIGH VOLTAGE. Frequency converters contain high voltage when connected to AC mains. Installation, start-up and maintenance must be performed by qualified personnel only. Failure to comply could result in death or serious injury.

WARNING:

DISCHARGE TIME. Disconnect and lock out electrical power and wait for the minimum waiting time specified below. Failure to wait the specified time after power has been removed before performing service or repair could result in death or serious injury.

Frequency converters contain DC-link capacitors that can remain charged even when the frequency converter is not powered. To avoid electrical hazards, stop motor and disconnect:

- AC mains
- Any permanent magnet type motors
- Any remote DC-link power supplies, including battery backups, ups and DC-link connections to other frequency converters.

Wait for the capacitors to discharge completely before performing any service or repair work. Refer to the following table for wait times:

Voltage (V)	Power range		Minimum waiting time (min)
	hp	kW	
200-240	1.5–5	1.1-3.7	4
200-240	7.5-60	5.5-45	15
380-480	1.5-10	1.1-7.5	4
380-480	15-125	11-90	15
380–480	150–350	90-315	20
380–480	450–600	315-450	40
525-690	1.5-10	1.1-7.5	4
525-690	1.5-10	1.1-7.5	7
525-690	15-125	11-90	15
525–690	75– 350	55-315	20
525–690	350–600	315-450	30

High voltage may be present even when the warning LED indicator lights are off.

WARNING:

LEAKAGE CURRENT HAZARD. Follow national and local codes regarding protective earthing of equipment with a leakage current > 3.5 mA. Frequency converter technology implies high frequency switching at high power. This will generate a leakage current in the earth connection. A fault current in the frequency converter at the output power terminals might contain a DC component which can charge the filter capacitors and cause a transient earth current. The earth leakage current depends on various system configurations including RFI filtering, screened motor cables, and frequency converter power. Failure to ground the drive properly could result in death or serious injury.

EN/EC61800–5–1 (Power Drive System Product standard) requires special care if the leakage current exceeds 3.5 mA. Earth grounding must be reinforced in one of the following ways:

- Earth ground wire of at least 8 AWG or 10 mm^2.
- Two separate earth ground wires both complying with the dimensioning rules.

See EN60364–5–54 section 543.7 for further information.

WARNING:

UNINTENDED START. When the frequency converter is connected to AC mains, the motor may start at any time. The frequency converter, motor, and any driven equipment must be in operational readiness. Failure to comply could result in death, serious injury, equipment, or property damage.

To prevent unintended motor start:

- Press [Off/Reset] on the LCP, before programming parameters.
- Disconnect the frequency converter from mains.
- The frequency converter, motor, and any driven equipment must be fully wired and assembled when the frequency converter is connected to AC mains, DC power supply, or load sharing.

WARNING:

UNINTENDED START. WINDMILLING! Unintended rotation of permanent magnet motors causes a risk of personal injury and equipment damage. Ensure permanent magnet motors are blocked to prevent unintended rotation.

WARNING:

EQUIPMENT HAZARD. Rotating shafts and electrical equipment can be hazardous. All electrical work must conform to national and local electrical codes. Installation, start-up, and maintenance must be performed by trained and qualified personnel. Wear safety glasses whenever working on electric control or rotating equipment. Failure to follow these guidelines could result in death or serious injury.

WARNING:

Only use original spare parts to replace any worn or faulty components. The use of unsuitable spare parts may cause malfunctions, damage, and injuries as well as void the guarantee.

WARNING:

This product can expose you to chemicals including Lead, which is known to the State of California to cause cancer and birth defects or other reproductive harm. For more information go to: www.P65Warnings.ca.gov.

CAUTION:

INTERNAL FAILURE HAZARD. Risk of personal injury when the frequency converter is not properly closed. Before applying power, ensure all safety covers are in place and securely fastened.

CAUTION:

Before using the Genie, set DI18 to Stop (terminal 18 open) to prevent the unit from starting the motor. Keep terminal 18 open to avoid an unintended motor rotation. Apply the Start signal to the controller only when pump operation is desired.

1.3 User safety

General safety rules

These safety rules apply:

- Always keep the work area clean.
- Pay attention to the risks presented by gas and vapors in the work area.
- Avoid all electrical dangers. Pay attention to the risks of electric shock or arc flash hazards.
- Always bear in mind the risk of drowning, electrical accidents, and burn injuries.

Safety equipment

Use safety equipment according to the company regulations. Use this safety equipment within the work area:

- Hard hat
- Safety goggles, preferably with side shields
- Protective shoes
- Protective gloves
- Gas mask
- Hearing protection
- First-aid kit
- Safety devices

NOTICE:

Never operate a unit unless safety devices are installed. Also see specific information about safety devices in other chapters of this manual.

Electrical connections

Electrical connections must be made by certified electricians in compliance with all international, national, state, and local regulations. For more information about requirements, see sections dealing specifically with electrical connections.

Precautions before work

Observe these safety precautions before you work with the product or are in connection with the product:

- Provide a suitable barrier around the work area, for example, a guard rail.
- Make sure that all safety guards are in place and secure.
- Make sure that you have a clear path of retreat.
- Make sure that the product cannot roll or fall over and injure people or damage property.
- Make sure that the lifting equipment is in good condition.
- Use a lifting harness, a safety line, and a breathing device as required.
- Allow all system and pump components to cool before you handle them.
- Make sure that the product has been thoroughly cleaned.
- Disconnect and lock out power before you service the pump.
- Check the explosion risk before you weld or use electric hand tools.

Precautions during work

Observe these safety precautions when you work with the product or are in connection with the product:

- Never work alone.
- Always wear protective clothing and hand protection.
- Stay clear of suspended loads.
- Always lift the product by its lifting device.
- Beware of the risk of a sudden start if the product is used with an automatic level control.
- Beware of the starting jerk, which can be powerful.
- Rinse the components in water after you disassemble the pump.
- Do not exceed the maximum working pressure of the pump.
- Do not open any vent or drain valve or remove any plugs while the system is pressurized. Make sure that the pump is isolated from the system and that pressure is relieved before you disassemble the pump, remove plugs, or disconnect piping.
- Never operate a pump without a properly installed coupling guard.

1.3.1 Wash the skin and eyes

Follow these procedures for chemicals or hazardous fluids that have come into contact with your eyes or your skin:

Condition	Action
Chemicals or hazardous fluids in eyes	1. Hold your eyelids apart forcibly with your fingers. 2. Rinse the eyes with eyewash or running water for at least 15 minutes. 3. Seek medical attention.
Chemicals or hazardous fluids on skin	1. Remove contaminated clothing. 2. Wash the skin with soap and water for at least 1 minute. 3. Seek medical attention, if necessary.

1.4 Protecting the environment

Emissions and waste disposal

Observe the local regulations and codes regarding:

- Reporting of emissions to the appropriate authorities
- Sorting, recycling and disposal of solid or liquid waste
- Clean-up of spills

Exceptional sites

CAUTION: Radiation Hazard

Do NOT send the product to Xylem if it has been exposed to nuclear radiation, unless Xylem has been informed and appropriate actions have been agreed upon.

Recycling guidelines

Always follow local laws and regulations regarding recycling.

Waste and emissions guidelines

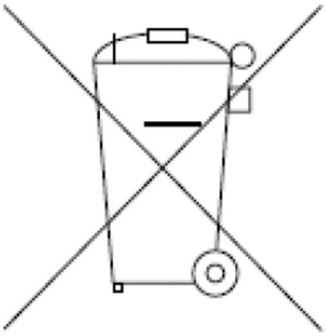

Do not dispose of equipment containing electrical components together with domestic waste.

Collect it separately in accordance with local and currently valid legislation.

2 Transportation and Storage

2.1 Examine the delivery

2.1.1 Examine the package

1. Examine the package for damaged or missing items upon delivery.
2. Record any damaged or missing items on the receipt and freight bill.
3. If anything is out of order, then file a claim with the shipping company.

   If the product has been picked up at a distributor, make a claim directly to the distributor.

2.1.2 Examine the unit

1. Remove packing materials from the product.

   Dispose of all packing materials in accordance with local regulations.
2. To determine whether any parts have been damaged or are missing, examine the product.
3. If applicable, unfasten the product by removing any screws, bolts, or straps.

   Use care around nails and straps.
4. If there is any issue, then contact a sales representative.

2.2 System lifting

WARNING:

Assembled units and their components are heavy. Failure to properly lift and support this equipment can result in serious physical injury and/or equipment damage. Lift equipment only at the specifically identified lifting points. Lifting devices such as eyebolts, slings, and spreaders must be rated, selected, and used for the entire load being lifted.

WARNING: Crush Hazard

Always lift the unit by its designated lifting points.
Use suitable lifting equipment and ensure that the product is properly harnessed.
Wear personal protective equipment.
Stay clear of cables and suspended loads.

2.3 Transportation guidelines

2.3.1 Precautions

DANGER: Crush Hazard

Moving parts can entangle or crush. Always disconnect and lock out power before servicing to prevent unexpected startup. Failure to do so could result in death or serious injury.

2.4 Storage guidelines

Storage location

The product must be stored in a covered and dry location free from heat, dirt, and vibrations.

NOTICE:

Protect the product against humidity, heat sources, and mechanical damage.

NOTICE:

Do not place heavy weights on the packed product.

3 Product Description

3.1 Product overview

WARNING:

CALIFORNIA PROPOSITION 65 WARNING. See *Safety precautions* on page 6 for details of the safety precaution for California Proposition 65 Warning.

A frequency converter is an electronic motor controller that converts AC mains input into DC and then into a variable voltage, variable frequency output waveform. The following is a list of functions of the frequency converter:

- Regulates the frequency and voltage to control the motor speed or torque.
- Varies the speed of the motor in response to system feedback, such as changing temperature or pressure for controlling fan, compressor, or pump motors.
- Regulates the motor by responding to remote commands from external controls.
- Monitors the system and motor status.
- Issues warnings or alarms for fault conditions.
- Starts and stops the motor.
- Optimizes energy efficiency.

Operation and monitoring functions are available as status indications to an outside control system or serial communication network.

3.1.1 Conformity, approvals and certifications

Conformity	Approvals and certifications
CE	c UL us

The unit complies with UL 508C thermal memory retention requirements.

3.1.2 Abbreviations and standards

Abbreviation	Term	SI unit	I-P unit
a	Acceleration	m/s^2	ft/s^2
AWG	American wire gauge		
Auto Tune	Automatic Motor Tuning		
°C	Celsius		
I	Current	A	Amp
I_{LIM}	Current limit		
Joule	Energy	J = N·m	ft-lb, Btu
°F	Fahrenheit		
FC	Adjustable Frequency Drive		
f	Frequency	Hz	Hz
kHz	Kilohertz	kHz	kHz
LCP	Local Control Panel		
mA	Milliampere		
ms	millisecond		
min	Minute		
MCT	Motion Control Tool		

Abbreviation	Term	SI unit	I-P unit
M-TYPE	Motor Type Dependent		
Nm	Newton meters		in-lbs
$I_{M,N}$	Nominal motor current		
$F_{M,N}$	Nominal motor frequency		
$P_{M,N}$	Nominal motor power		
$U_{M,N}$	Nominal motor voltage		
par.	Parameter		
PELV	Protective Extra Low Voltage		
Watt	Power	W	Btu/hr, hp
Pascal	Pressure	Pa = N/m^2	psi, psf, ft of water
I_{INV}	Rated Inverter Output Current		
RPM	Revolutions per minute		
SR	Size related		
T	Temperature	C	F
t	Time	s	s, hr
T_{LIM}	Torque limit		
U	Voltage	V	V
ELCB	Earth Leakage Circuit Breaker		
EMC	Electromagnetic Compatibility		
ETR	Electronic Thermal Relay		
GFCI	Ground Fault Circuit Interrupter		
RCD	Residual Current Device		
IPC	Intelligent Pump Controller		
PLC	Programmable Logic Controller		

3.2 Motor thermal protection

Motor Thermal Protection can be implemented using various techniques: PTC sensor in motor windings, mechanical thermal switch, (Klixon type) or Electronic Thermal Relay (ETR).

Protection against motor overheating comes from [1-90] Motor Thermal Protection. If the ETR function is desired, set [1-90] Motor Thermal Protection to data value [4] ETR trip (default value) or data value [3] ETR warning.

NOTICE: The ETR function is initialized at 1.16 x rated motor current and rated motor frequency. The ETR function provides class 20 motor overload protection in accordance with the NEC.

Motor Thermal Protection prevents the motor from overheating. The ETR function is an electronic feature that simulates a bimetal relay that is based on internal measurements. The characteristic is shown in the following figure.

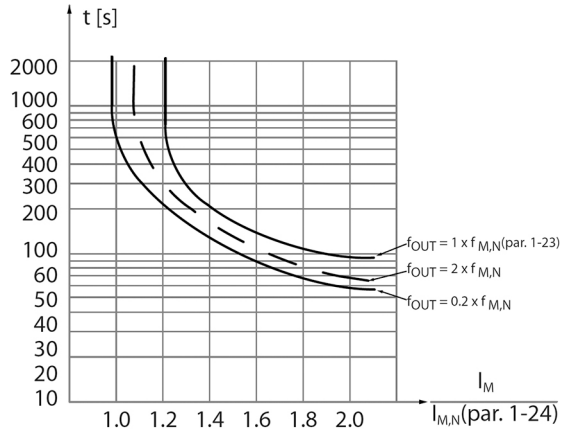

Figure 1: The characteristics of ETR function

The X-axis shows the ratio between I_{motor} actual and I_{motor} nominal. The Y-axis shows the time in seconds before the ETR cuts off and trips the frequency converter. The curves show the characteristic nominal speed, at twice the nominal speed and at 20% of the nominal speed. The curve shows that at lower speed the ETR cuts off at lower heat due to less cooling of the motor. In that way, the motor is protected from overheating even at low speed. The ETR function calculates the motor temperature that is based on actual current and speed. The calculated temperature is visible as a readout parameter in [16-18] **Motor Thermal** in the frequency converter.

Motor Thermal Protection can also be achieved using an external thermistor. Set [1-90] **Motor Thermal Protection** to data value [2] Thermistor trip or data value [1] Thermistor warning. Set [1-93] **Thermistor Source** to the input to which the thermistor is connected. Refer to the examples below for wiring details.

The thermistor cut-out value is >3kΩ. Integrate a thermistor (PTC sensor) in the motor for winding protection.

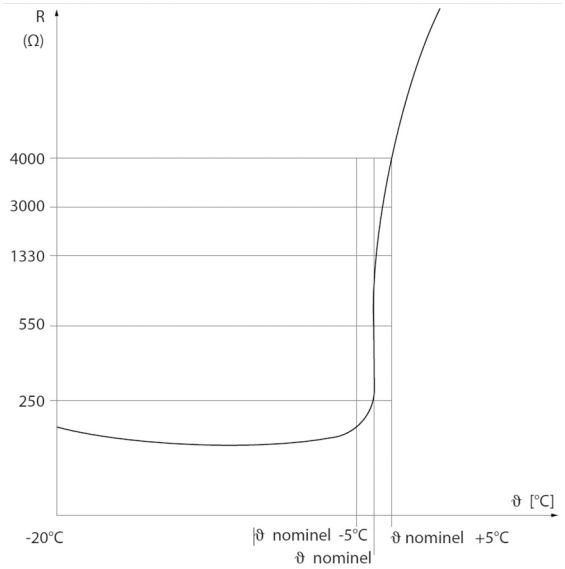

Figure 2: The characteristics of Thermistor resistant

The following examples show various ways to connect the PTC/Thermistor to the drive.

- Using a digital input and the 24 V as a power supply.
  - Parameter set-up:
    - Set [1-90] **Motor Thermal Protection** to Thermistor Trip [2]
    - Set [1-93] **Thermistor Source** to Digital Input 19 [4]

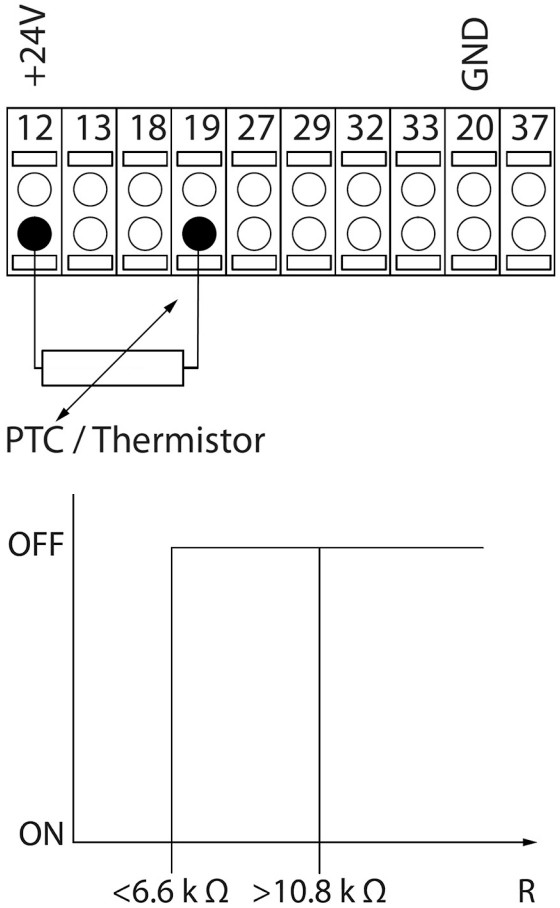

Figure 3: ON/OFF with a digital input and the 24 V as a power supply

- Using a digital input and the 10 V as a power supply.
  - Parameter set-up:
    - Set [1-90] **Motor Thermal Protection** to Thermistor Trip [2]
    - Set [1-93] **Thermistor Source** to Digital Input 19 [4]

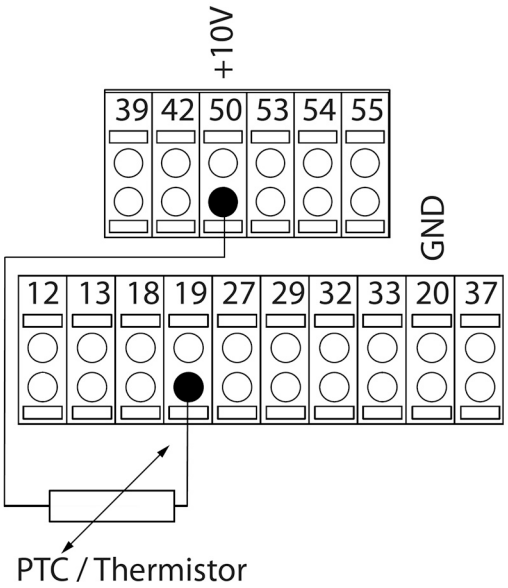

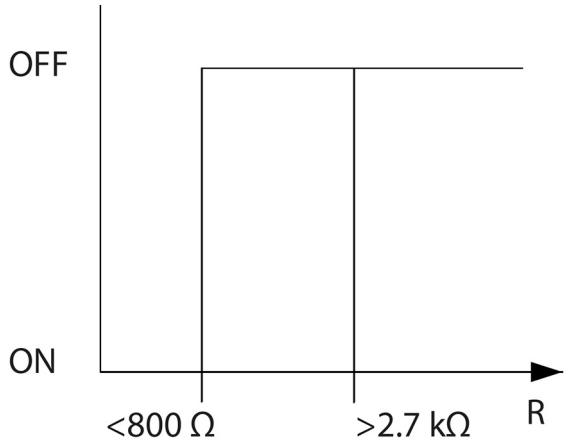

Figure 4: ON/OFF with a digital input and the 10 V as a power supply

- Using an analog input and 10 V as a power supply
  - Parameter set-up:
    - Set [1-90] **Motor Thermal Protection** to Thermistor Trip [2]
    - Set [1-93] **Thermistor Source** to Analog Input 54 [2]. Do not use Analog Input 54 as any other feedback or reference source. Be sure to configure the analog input configuration switches properly.

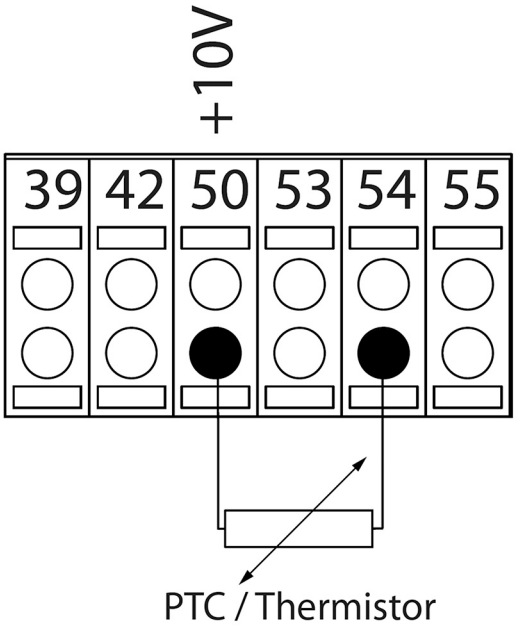

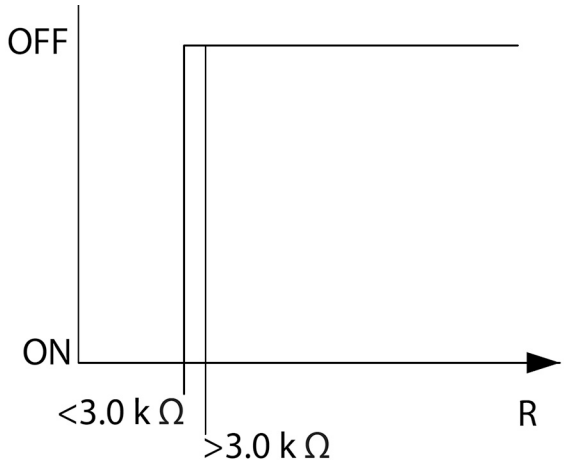

Figure 5: ON/OFF with an analog input and 10 V as a power supply

NOTE: Check that the chosen supply voltage follows the specifications of the thermistor element.

Summary

Input Digital/analog	Supply Voltage V Cut-out Values	Threshold Cut-out Values
Digital	24	< 6.6kΩ – > 10.8kΩ
Digital	10	< 800kΩ – > 2.7kΩ
Analog	10	< 3.0kΩ – > 3.0kΩ

With the Torque limit feature, the motor is protected from being overloaded independent of the speed. With the ETR, the motor is protected from being overheated and there is no need for any further motor protection. That means when the motor is heated up the ETR timer controls how long the motor can be operated at the high temperature before it is stopped to prevent overheating. If the motor is overloaded without reaching the temperature where the ETR turns off the motor, the torque limit protects the motor from being overloaded.

The ETR function is activated in [1-90] **Motor Thermal Protection** and is controlled in [4-16] **Torque Limit Motor Mode**. The time before the torque limit warning trips the drive is set in [14-25] **Trip Delay at Torque Limit**.

3.3 Dimensions

3.3.1 Frame sizes A2–A5, B1–B4, C1–C4

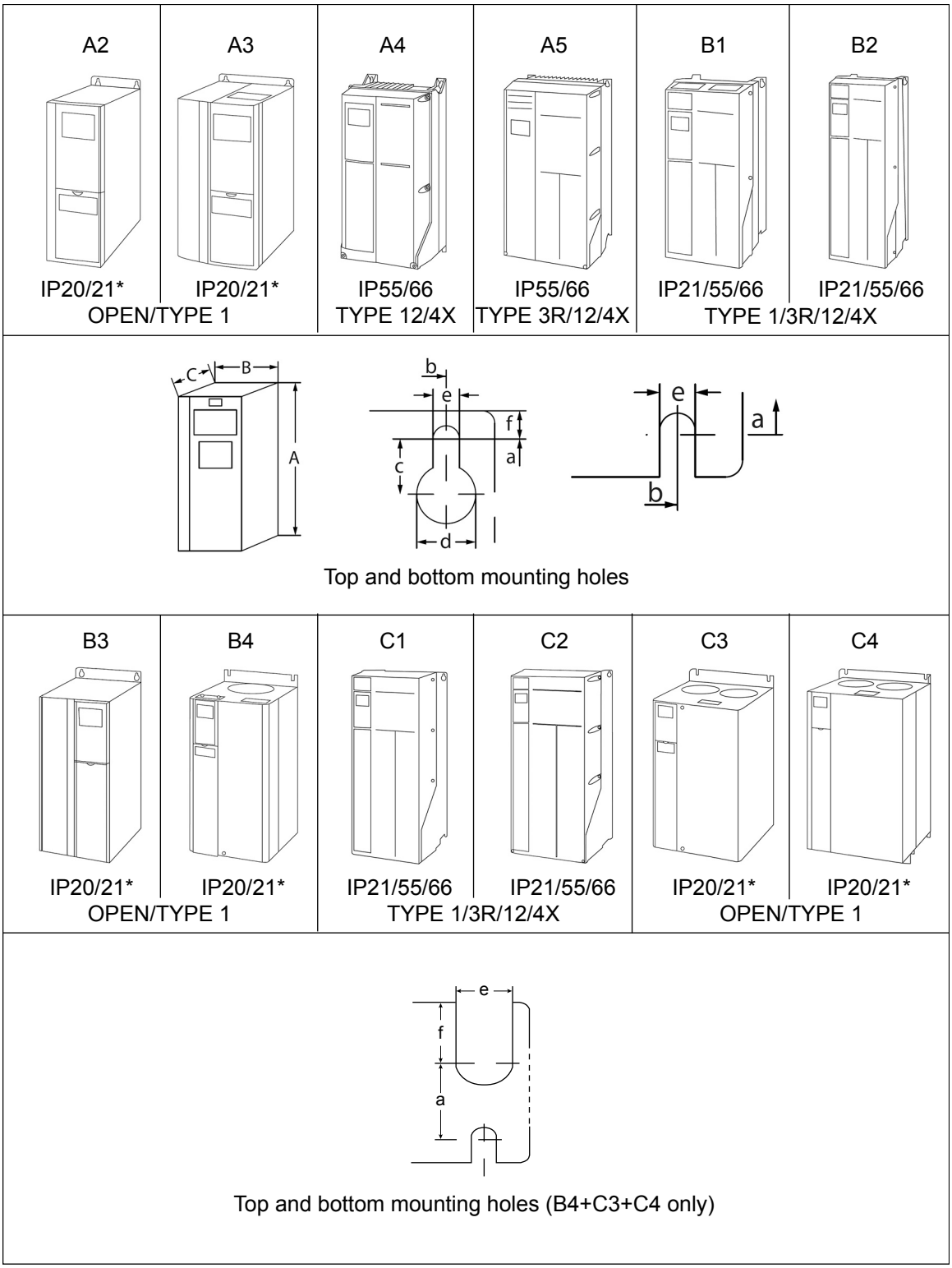

Table 1: Mechanical dimensions

Frame size	A2	A3	A4	A5	B1	B2	B3	B4	C1	C2	C3	C4
Single-Phase Rated Power hp [kW]												

Frame size		A2		A3		A4	A5	B1	B2	B3	B4	C1	C2	C3	C4
200–240 V							1.5 [1.1]	2-7.5 [1.5-5.5]	10 [7.5]			20 [15]	30[22]		
Three-Phase Rated Power hp [kW]															
200–240 V		1.5–3 [1.1-2.2]		4–5 [3-3.7]		1.5–3 [1.1-2.2]	1.5–5 [1.1-3.7]	7.5–15 [5.5-11]	20 [15]	7.5-15 [5.5-11]	20–25 [15-18]	25–40 [18-30]	50–60 [37-45]	30–40 [22-30]	50–60 [37-45]
380–480/500 V		1.5–5 [1.1-4]		7.5–10 [5.5-7.5]		1.5–5 [1.1-4]	1.5–10 [1.1-7.5]	15–25 [11-18]	30–40 [22-30]	15–25 [11-18]	30–50 [22-37]	50–75 [37-55]	100–125 [75-90]	60–75 [45-55]	100–125 [75-90]
525–600 V				1.5–10 [1.1-7.5]			1.5–10 [1.1-7.5]	15–25 [11-18]	15–40 [11-30]	15–25 [11-18]	30–50 [22-37]	50–75 [37-55]	50–125 [37-90]	60–75 [45-55]	100–125 [75-90]
525–690 V									15-22 [11-30]				50-125 [37-90]		
Enclosure Rating															
IP Rating		IP20	IP21	IP20	IP21	IP55 IP66	IP55 IP66	IP21 IP55 IP66	IP21 IP55 IP66	IP20	IP20	IP21 IP55 IP66	IP21 IP55 IP66	IP20	IP20
UL Type		OPEN	1	OPEN	1	12 4X	3R 12 4X	3R 12 4X	3R 12 4X	OPEN	OPEN	3R 12 4X	3R 12 4X	OPEN	OPEN
Height in (mm)															
Height with de-coupling plate for fieldbus cables	A	14.72 (374)	-	14.72 (374)	-	-	-	-	-	16.54 (420)	23.43 (595)	-	-	24.8 (630)	31.5 (800)
Height of backplate	A	10.55 (268)	14.76 (375)	10.55 (268)	14.76 (375)	15.35 (390)	16.54 (420)	18.90 (480)	25.59 (650)	15.71 (399)	20.47 (520)	26.77 (680)	30.31 (770)	21.65 (550)	25.98 (660)
Distance between mounting holes	a	10.12 (257)	13.78 (350)	10.12 (257)	13.78 (350)	15.79 (401)	15.83 (402)	17.87 (454)	24.57 (624)	14.96 (380)	19.49 (495)	25.51 (648)	29.09 (739)	20.51 (521)	24.84 (631)
Width in (mm)															
Width of backplate	B	3.54 (90)	3.54 (90)	5.12 (130)	5.12 (130)	7.87 (200)	9.53 (242)	9.53 (242)	9.53 (242)	6.50 (165)	9.10 (23 0)	12.13 (308)	14.57 (370)	12.13 (308)	14.57 (370)
Width of backplate with one C option	B	5.12 (130)	5.12 (130)	6.70 (170)	6.70 (170)	-	9.53 (242)	9.53 (242)	9.53 (242)	8.07 (205)	9.10 (230)	12.13 (308)	14.57 (370)	12.13 (308)	14.57 (370)
Width of backplate with 2 C options	B	5.91 (150)	5.91 (150)	7.48 (190)	7.48 (190)	-	9.53 (242)	9.53 (242)	9.53 (242)	8.86 (225)	9.10 (230)	12.13 (308)	14.57 (370)	12.13 (308)	14.57 (370)
Distance between mounting holes	b	2.76 (70)	2.76 (70)	4.33 (110)	4.33 (110)	6.73 (171)	8.46 (215)	8.27 (210)	8.27 (210)	5.51 (140)	7.87 (200)	10.71 (272)	13.15 (334)	10.63 (270)	12.99 (330)
IP Rating		IP20	IP21	IP20	IP21	IP55 IP66	IP55 IP66	IP21 IP55 IP66	IP21 IP55 IP66	IP20	IP20	IP21 IP55 IP66	IP21 IP55 IP66	IP20	IP20

Frame size		A2		A3		A4	A5	B1	B2	B3	B4	C1	C2	C3	C4
Depth in (mm)															
Without A/B Option Card*	C	8.07 (205)	8.15 (207)	8.07 (205)	8.15 (207)	6.89 (175)	7.87 (200)	10.24 (260)	10.24 (260)	9.80 (249)	9.53 (242)	12.20 (310)	13.19 (335)	13.11 (333)	13.11 (333)
With A/B Option Card*	C	8.66 (220)	8.74 (222)	8.66 (220)	8.74 (222)	6.89 (175)	7.87 (200)	10.24 (260)	10.24 (260)	10.31 (262)	9.53 (242)	12.20 (310)	13.19 (335)	13.11 (333)	13.11 (333)
Screw holes in (mm)															
	c	0.31 (8)	0.31 (8)	0.31 (8)	0.31 (8)	0.32 (8.2)	0.32 (8.2)	0.47 (12)	0.47 (12)	0.31 (8)	-	0.47 (12)	0.47 (12)	-	-
	d	0.43 (11)	0.43 (11)	0.43 (11)	0.43 (11)	0.47 (12)	0.47 (12)	0.75 (19)	0.75 (19)	0.47 (12)	-	0.75 (19)	0.75 (19)	-	-
	e	0.22 (5.5)	0.22 (5.5)	0.22 (5.5)	0.22 (5.5)	0.26 (6.5)	0.26 (6.5)	0.35 (9)	0.35 (9)	0.27 (6.8)	0.33 (8.5)	0.35 (9)	0.35 (9)	0.33 (8.5)	0.33 (8.5)
	f	0.35 (9)	0.35 (9)	0.26 (6.5)	0.26 (6.5)	0.24 (6)	0.35 (9)	0.35 (9)	0.35 (9)	0.31 (7.9)	0.59 (15)	0.39 (9.8)	0.39 (9.8)	0.67 (17)	0.67 (17)
Max. weight – lb (kg)		10.8 (4.9)	11.7 (5.3)	14.6 (6.6)	15.4 (7)	21.4 (9.7)	29.8 (13.5)/ 31.3 (14.2)	50.7 (23)	59.5 (27)	26.5 (12)	51.8 (23.5)	99.2 (45)	143.3 (65)	77.2 (35)	110.2 (50)

3.3.2 Frame sizes D1–D4, D5, D7

NOTICE: dimensions in the following drawings are in mm (in.).

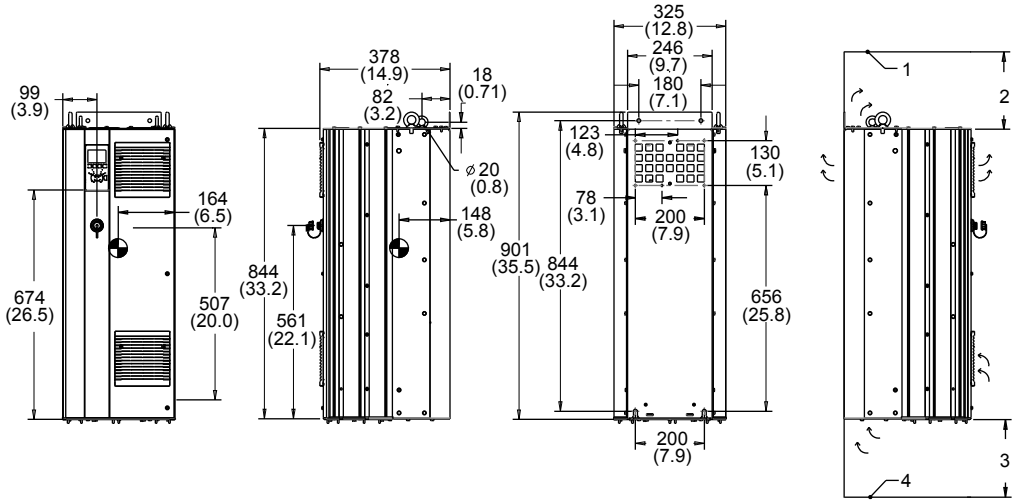

Figure 6: D1 enclosure, cabinet mount

1. Ceiling
2. Minimum 225 (8.9) airspace outlet
3. Minimum 225 (8.9) airspace inlet
4. Floor

Please note airflow directions

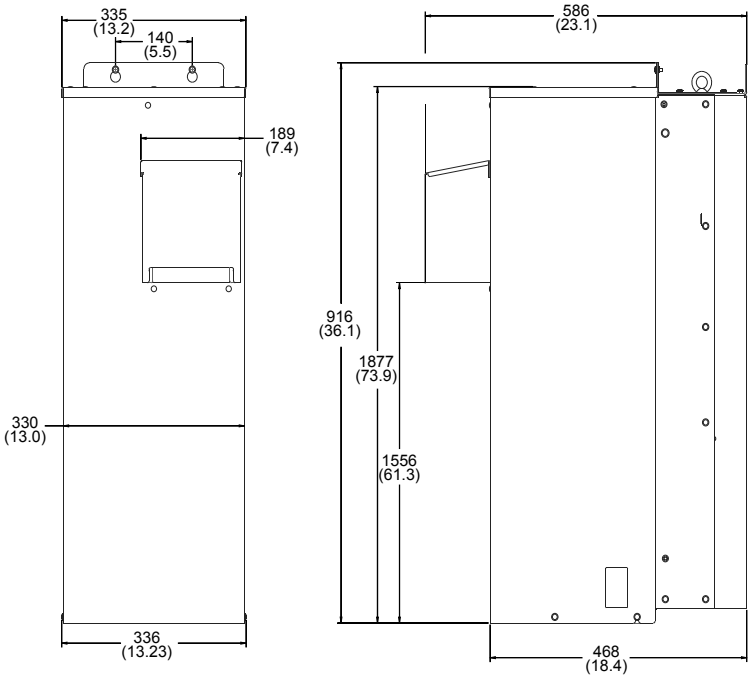

Figure 7: Exterior dimensions for D1h with NEMA 3R Kit (9K715)

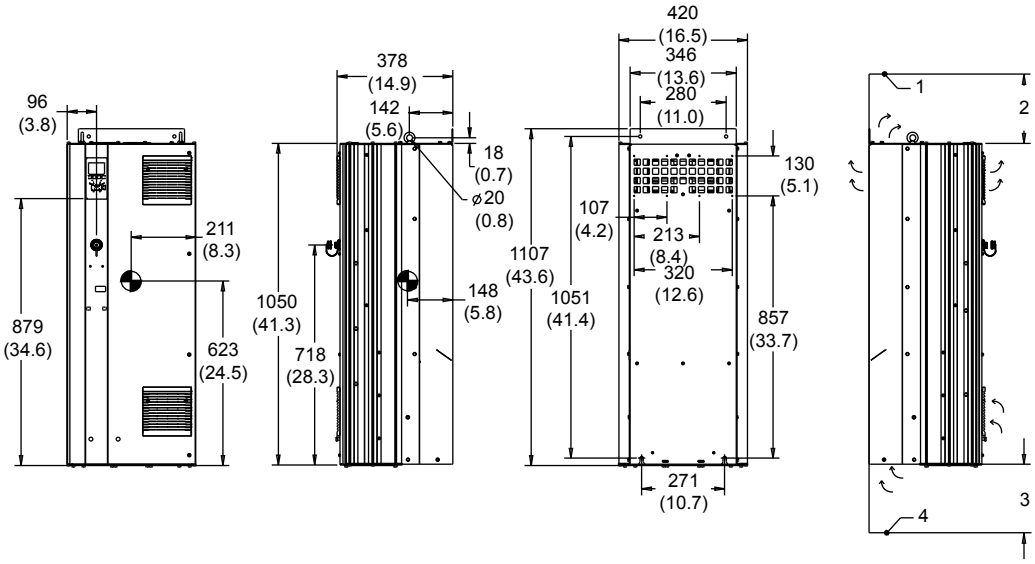

Figure 8: D2 enclosure, cabinet mount

1. Ceiling
2. Minimum 225 (8.9) airspace outlet
3. Minimum 225 (8.9) airspace inlet
4. Floor

Please note airflow directions

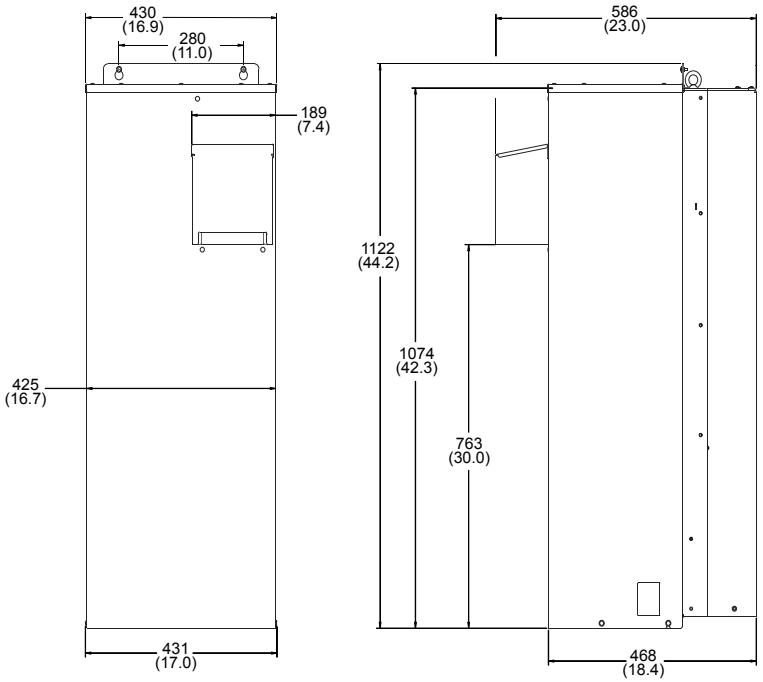

Figure 9: Exterior dimensions for D2h with NEMA 3R Kit (9K716)

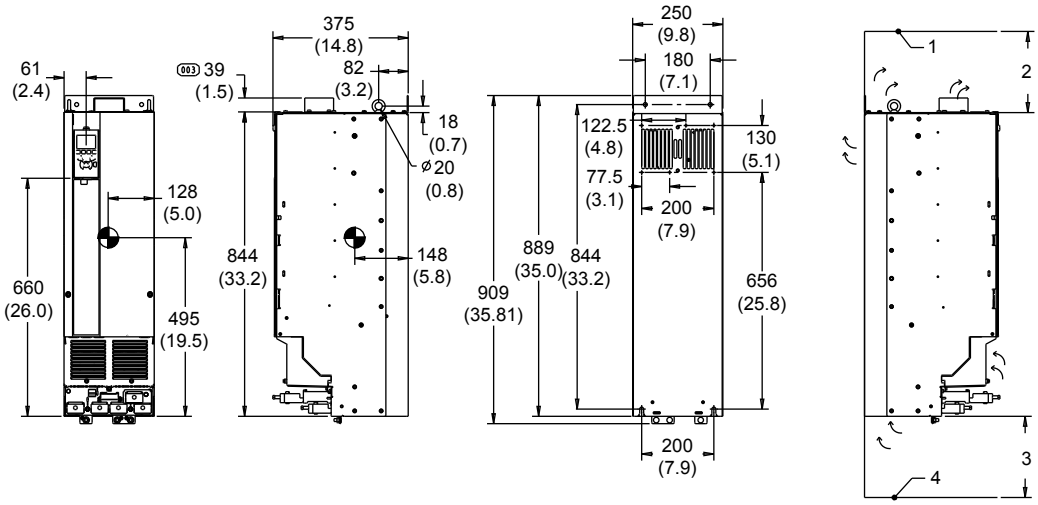

Figure 10: D3 enclosure, cabinet mount

1. Ceiling
2. Minimum 225 (8.9) airspace outlet
3. Minimum 225 (8.9) airspace inlet
4. Floor

Please note airflow directions

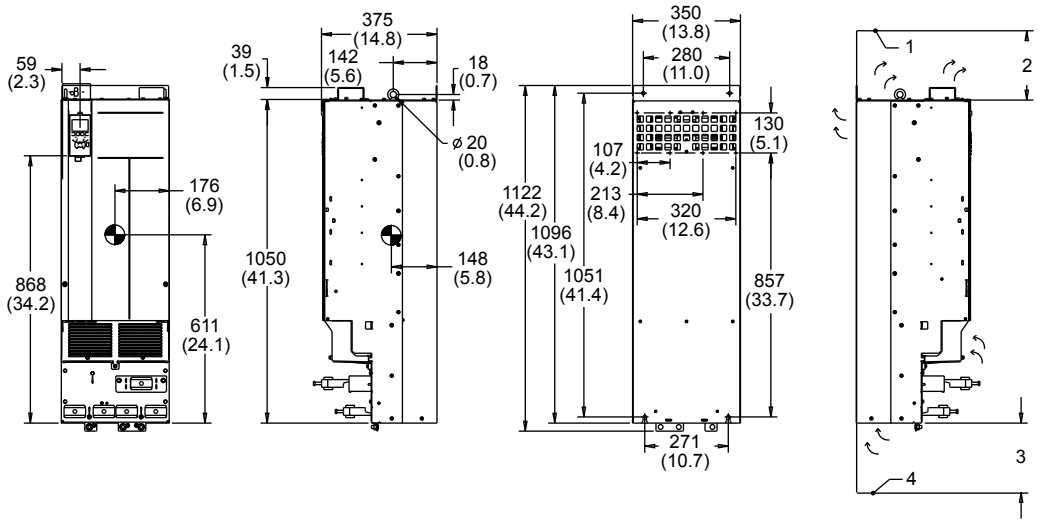

Figure 11: D4 enclosure, cabinet mount

1. Ceiling
2. Minimum 225 (8.9) airspace outlet
3. Minimum 225 (8.9) airspace inlet
4. Floor

Please note airflow directions

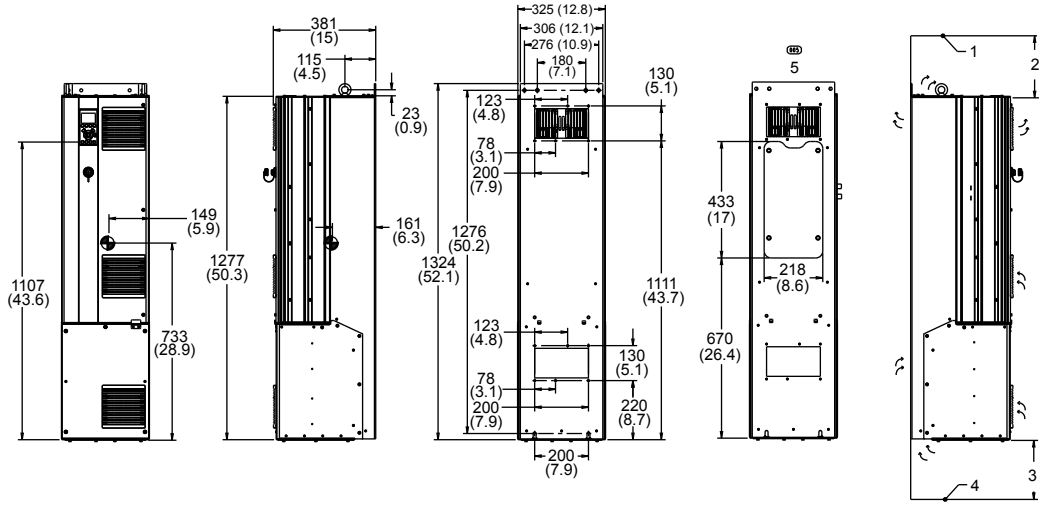

Figure 12: D5 Enclosure

1. Ceiling
2. Minimum 225 (8.9) airspace outlet
3. Minimum 225 (8.9) airspace inlet
4. Floor
5. Heatsink access panel

Please note airflow directions

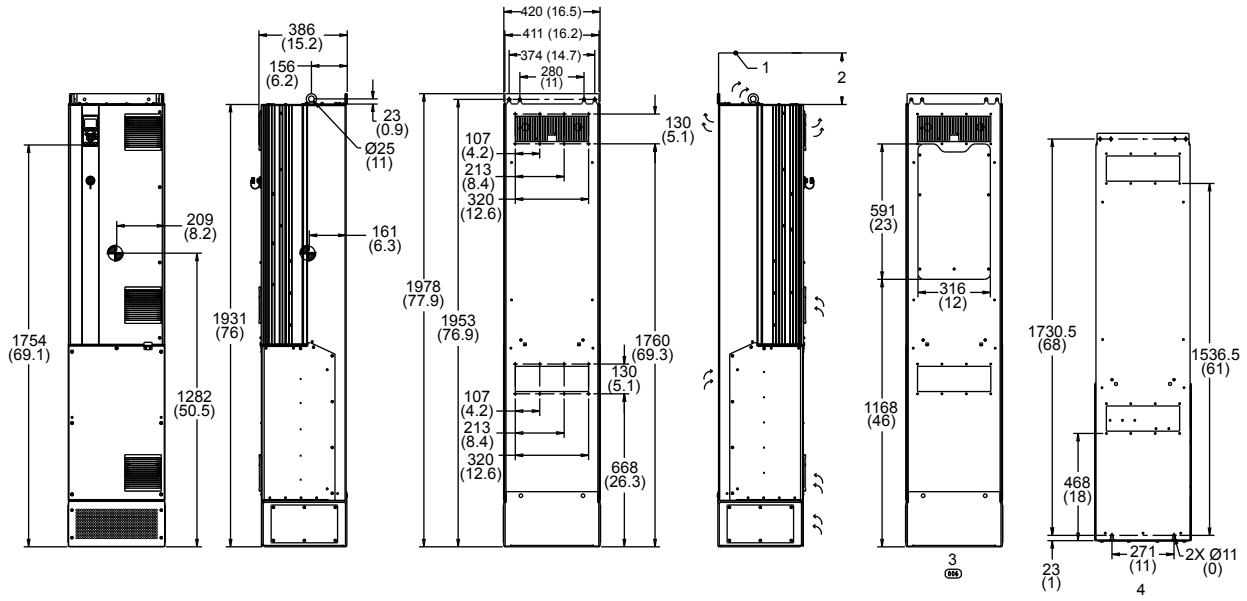

Figure 13: D7 Enclosure

1. Ceiling
2. Minimum 225 (8.9) airspace outlet
3. Heatsink access panel
4. Wall mounting holes

Please note airflow directions

Table 2: Mechanical dimensions and rated power for D1, D2, D3, D4

Frame size		D1	D2	D3	D4
Normal overload rated power 110% overload torque		150–250 hp (110–160 kW) at 400 V 150-200 hp (132–160 kW) at 690 V (525–690 V)	300–450 hp (200–315 kW) at 400 V 250-350 hp (200-315 kW) at 690 V (525–690 V)	150–250 hp (110–160 kW) at 400 V (380–480 V) 150-200 hp (132-160 kW) at 690 V (525-690 V)	300–450 hp (200–315 kW) at 400 V 250–400 hp (200–400 kW) at 690 V (525–690 V)
Enclosure protection	IP	21/54		00	
	NEMA	Type 1/Type 12		Chassis	
Shipping Dimension in. (mm)	Height	23.11 (587)			
	Width	39.25 (997)	46.06 (1170)	39.25 (997)	46.06 (1170)
	Depth	18.11 (460)	21.06 (535)	18.11 (460)	21.06 (535)
Drive dimension in. (mm)	Height	35.5 (901)	41.7 (1060)	35.8 (909)	44.2 (1122)
	Width	12.8 (325)	16.54 (420)	9.8 (250)	13.8 (350)
	Depth	15.0 (381)		14.76 (375)	
Max. Weight lbs (kg)		137 (62)	125 (276)	137 (62)	125 (276)

Frame Size		D1	D2	D3	D4
Enclosure protection	IP	21/54		00	
	NEMA	Type 1 / Type 12		Chassis	
Normal overload rated power – 110% overload torque		150–250 hp (110–160 kW) at 400 V (380–480 V) 150-200 hp (132–160 kW) at 400 V (380–480 V)	300–450 hp (200–315 kW) at 400 V 250-350 hp (200-315 kW) at 690 V (525–690 V)	150–250 hp (110–160 kW) at 400 V (380–480 V) 150-200 hp (132-160 kW) at 690 V (525-690 V)	300–450 hp (200–315 kW) at 400 V 250–400 hp (200–400 kW) at 690 V (525–690 V)

Table 3: Mechanical dimensions and rated power for D5, D7

Frame size		D5	D7
Normal overload rated power 110% overload torque		150–250 hp (110–160 kW) at 400 V (380–480 V) 150-200 hp (132-160 kW) at 690 V (525-690 V)	300–450 hp (200–315 kW) at 400 V 250–400 hp (200–400 kW) at 690 V (525–690 V)
Enclosure protection	IP	21/54	21/54
	NEMA	Type 1/Type 12	Type 1/Type 12
Shipping dimensions in. (mm)	Height	25.98 (660)	
	Width	71.65 (1820)	97.24 (2470)
	Depth	20.08 (510)	23.23 (590)
Drive dimensions in. (mm)	Height	52.13 (1324)	77.87 (1978)
	Width	12.8 (325)	16.54 (420)
	Depth	15 (381)	15.2 (386)
Max. Weight lbs (kg)		218 (99)	408 (185)

Frame size		D5	D7
Enclosure protection	IP	21/54	
	NEMA	Type 1/Type 12	
Normal overload rated power – 110% overload torque		150–250 hp (110–160 kW) at 400 V (380–480 V) 150-200 hp (132-160 kW) at 690 V (525-690 V)	300–450 hp (200–315 kW) at 400 V 250–400 hp (200–400 kW) at 690 V (525–690 V)

NOTE:

- The typical power loss is at nominal load conditions and expected to be within ±15% (tolerance relates to variety in voltage and cable conditions).
- The losses are based on the default switching frequency. The losses increase significantly at higher switching frequencies.
- D5h-D7h frames for IP21 and IP54 are based upon D1h and D2h ratings added with the options cabinet for disconnect and fuse respectively, shown in the following table.
- The NEMA 3R cover kit is for D1h and D2h enclosure.

Table 4: D5h-D8h frames

Frame size	Description	Max. weight, kg (lbs)
D5h	D1h ratings+disconnect and/or brake chopper	166 (366)
D7h	D2h ratings+disconnect and/or brake chopper	200 (441)

3.4 Frame size description

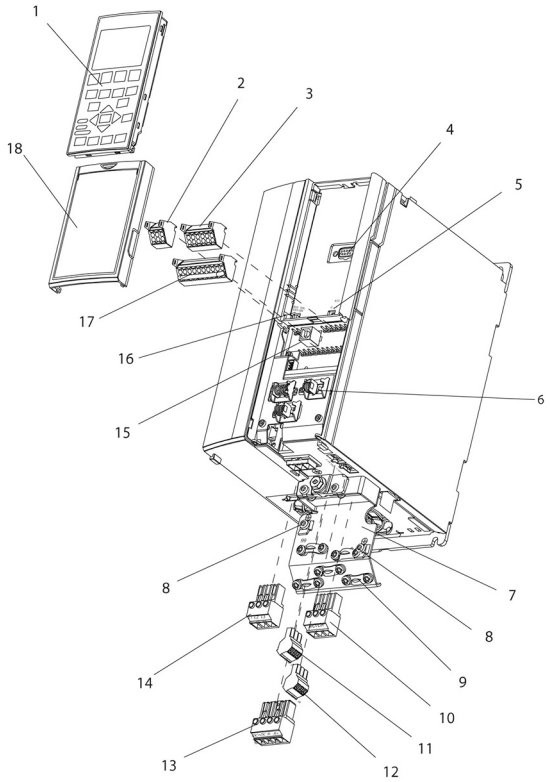

Figure 14: Exploded view of Frame Size A

1	LCP	10	Motor output terminals 96 (U), 98 (W)
2	RS-485 serial bus connector (+68, 69)	11	Relay 2 (01, 02, 03)
3	Analog I/O connector	12	Relay 1 (04, 05, 06)
4	LCP input plug	13	Brake (-81, +82) and load sharing (-88, +89) terminals
5	Analog switch A54	14	Mains input terminals 91 (L1), 92 (L2), 93 (L3)
6	Cable strain relief/PE ground	15	USB connector
7	Decoupling plate	16	Serial bus terminal switch
8	Grounding clamp (PE)	17	Digital I/O and 24 V power supply
9	Shielded cable grounding clamp and strain relief	18	Control cable cover plate

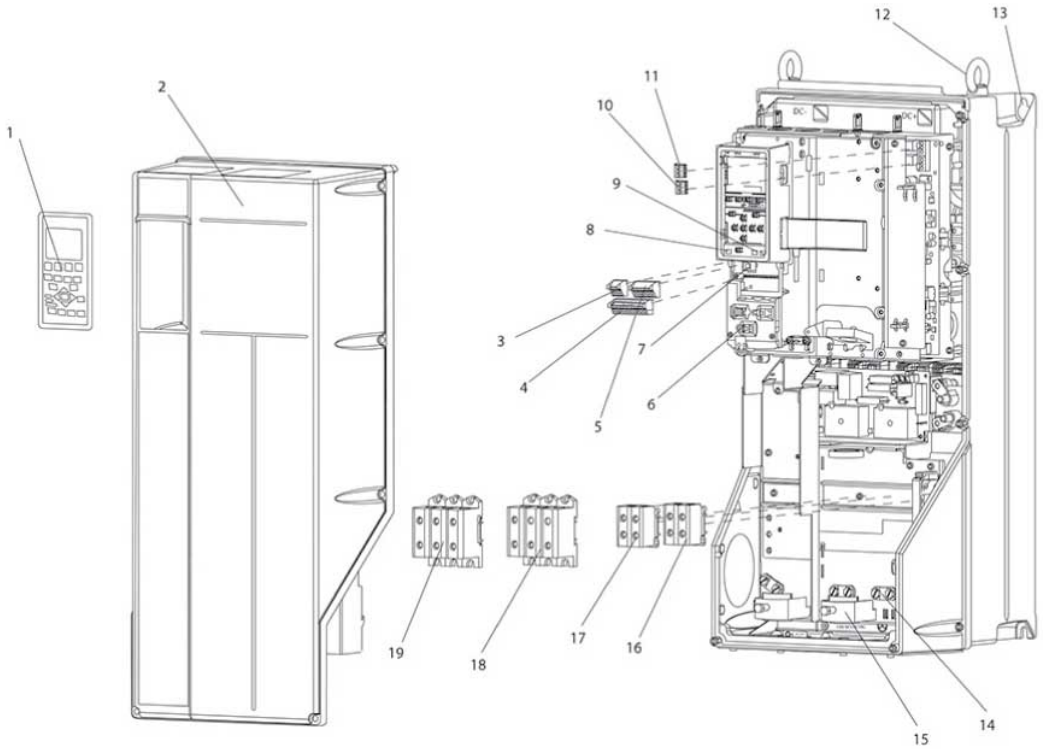

Figure 15: Exploded view of Frame Sizes B and C, IP55, IP66 UL Type 3R, 12 and 4X

1	LCP	11	Relay 2 (04, 05, 06)
2	Cover	12	Lifting ring
3	RS-485 serial bus connector	13	Mounting slot
4	Digital I/O and 24 V power supply	14	Grounding clamp (PE)
5	Analog I/O connector	15	Cable strain relief / PE ground
6	Cable strain relief/PE ground	16	Brake terminal (-81, +82)
7	USB connector	17	Load sharing terminal (DC bus) (-88, +89)
8	Serial bus terminal switch	18	Motor output terminals 96 (U), 97 (V), 98 (W)
9	Analog switch A54	19	Mains input terminals 91 (L1), 92 (L2), 93 (L3)
10	Relay 1 (01, 02, 03)		

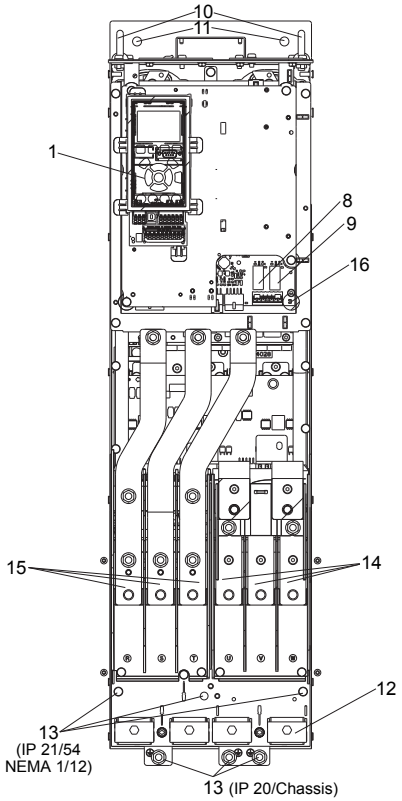

Figure 16: D1 Interior components

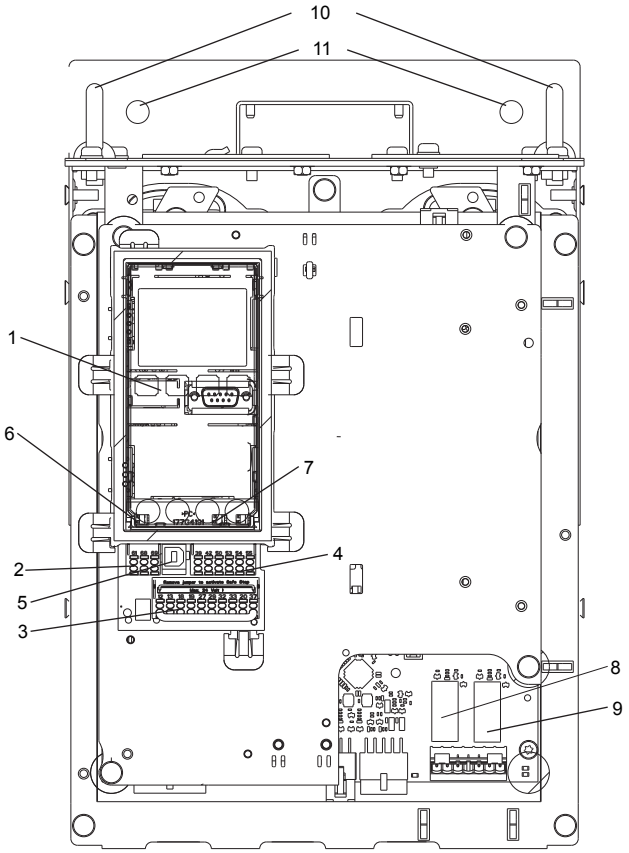

Figure 17: Close-up view: LCP and control functions

1	LCP
2	RS-485 serial bus connector
3	Digital I/O and 24 V power supply
4	Analog I/O connector
5	USB connector
6	Serial bus terminal switch
7	Analog switch A54
8	Relay 1 (01, 02, 03)
9	Re;ay 2 (04, 05, 06)
10	Lifting ring
11	Mounting slot
12	Cable clamp (PE)
13	Ground
14	Motor output terminals 96 (U), 97 (V), 98 (W)
15	Line power input terminals 91 (L1), 92 (L2), 93 (L3)
16	TB5 (IP21/54 only). Terminal block for anti-condensation heater.

For location of TB6 (terminal block for contactor), see Terminal Locations: D5h-D8h.

3.5 Internal frequency converter controller functions

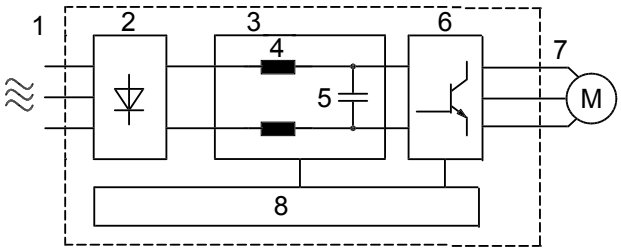

Figure 18: Frequency converter block diagram

Area	Title	Functions
1	Mains input	Three-phase AC mains power supply to the frequency converter
2	Rectifier	The rectifier bridge converts the AC input to DC current to supply inverter power.
3	DC bus	Intermediate DC-bus circuit handles the DC current
4	DC reactors	• Filter the intermediate DC circuit voltage • Proveide line transient protection • Reduce RMS current • Raise the power factor reflected back to the line • Reduce harmonics on the AC input
5	Capacitor bank	• Stores the DC power • Provides ride-through protection for short power losses
6	Inverter	Converts the DC into a controlled PWM AC waveform for a controlled variable output to the motor.
7	Output to motor	Regulated three-phase output power to the motor
8	Control circuitry	• Input power, internal processing, output, and motor current are monitored to provide efficient operation and control. • User interface and external commands are monitored and performed. • Status output and control can be provided.

4 Mechanical Installation

4.1 Pre-installation

4.1.1 Installation site checklist

- The frequency converter relies on the ambient air for cooling. Observe the limitations on ambient air temperature for optimal operation.
- Ensure that the installation location has sufficient support strength to mount the frequency converter.
- Keep the manual, drawings, and diagrams accessible for detailed installation and operation instructions. It is important that the manual is available for equipment operators.
- Locate equipment as near to the motor as possible. Keep motor cables as short as possible. Check the motor characteristics for actual tolerances.
  - For installations with long motor cables use the output filter option to protect the motor.
- Ensure that the ingress protection rating of the frequency converter is suitable for the installation environment. IP55 (Type 3R/12) or IP66 (Type 4X) enclosures may be necessary.

CAUTION:

Ingress protection. IP54, IP55 (Type 3R/12) and IP66 (Type 4X) ratings can only be guaranteed if the unit is properly closed.

- Ensure all cable glands and unused holes for glands are properly sealed.
- Ensure that the unit cover is properly closed.

Device damage through contamination. Do not leave the frequency converter uncovered.

4.1.2 Frequency converter and motor pre-installation check list

- Compare the model number of the unit on the nameplate to what was ordered to verify the proper equipment.
- Ensure each of the following are rated for same voltage:
  - Mains (power)
  - Frequency converter
  - Motor
- Ensure that the frequency converter output current rating is equal to or greater than motor service factor current for peak motor performance.
  - Motor size and frequency converter power must match for proper overload protection.
  - If frequency converter rating is less than motor, full motor output cannot be achieved.

4.2 General considerations

4.2.1 Tools needed

To perform the mechanical installation, the following tools are needed:

- Drill with 0.39 or 0.47 in (10 or 12 mm) drill.
- Tape measure
- Wrench with relevant metric sockets (0.28–0.67 in (7–17 mm))
- Extensions to wrench

- Sheet metal punch for conduits or cable connectors in IP 21/NEMA 1 and IP 54 units
- Lifting bar to lift the unit (rod or tube max. Ø1 in (25 mm), able to lift minimum 880 lbs (400 kg).
- Crane or other lifting aid to place the frequency converter in position.

4.2.2 Space

Ensure proper space above and below the frequency converter to allow airflow and cable access. In addition, space in front of the unit must be considered to allow the panel door to be opened.

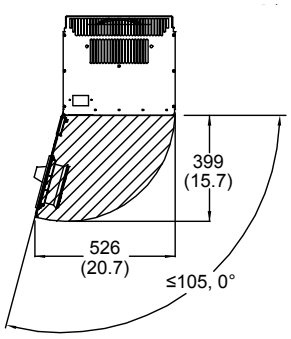

Figure 19: Space in front of IP21/IP54 enclosure type, frame size D1 and D2

4.2.3 Wire access

Ensure that proper cable access is present including the necessary bending allowance. As the IP00 enclosure is open to the bottom, cables must be fixed to the back panel of the enclosure where the frequency converter is mounted, for example, by using cable clamps.

NOTICE:

All cable lugs/shoes must mount within the width of the terminal bus bar.

4.3 How to get started

The frequency converter is designed for a quick installation and is electromagnetic compatibility (EMC) compliant. Follow the steps that are described below.

CAUTION:

Read this manual carefully before installing and using the product. Improper use of the product can cause personal injury and damage to property, and may void the warranty.

Mechanical installation

- Mechanical mounting

Electrical installation

- Connection to Line and Protecting Ground
- Motor connection and cables
- Fuses and circuit breakers
- Control terminals cables

Quick Setup

- Local control panel, LCP
- Automatic Motor Adaptation, AMA
- Programming

Frame size depends on the enclosure type, power range, and AC line voltage.

See the following figures for the basic installation of single-phase and three-phase power line including motor, start/stop key, potentiometer for speed adjustment.

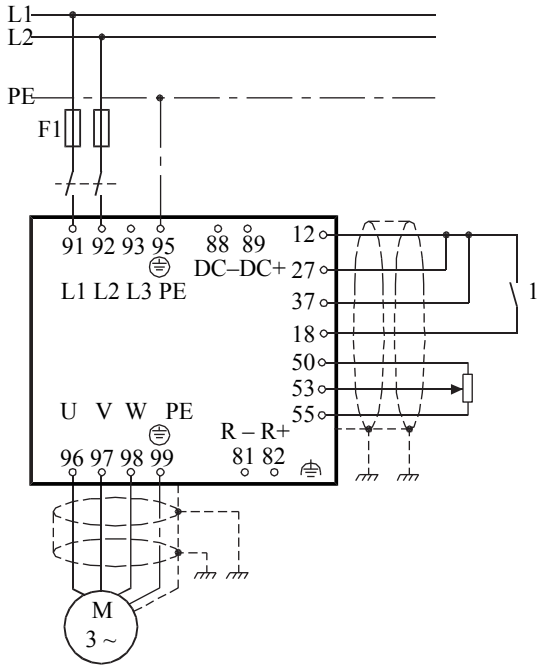

Figure 20: Basic installation for single-phase line power

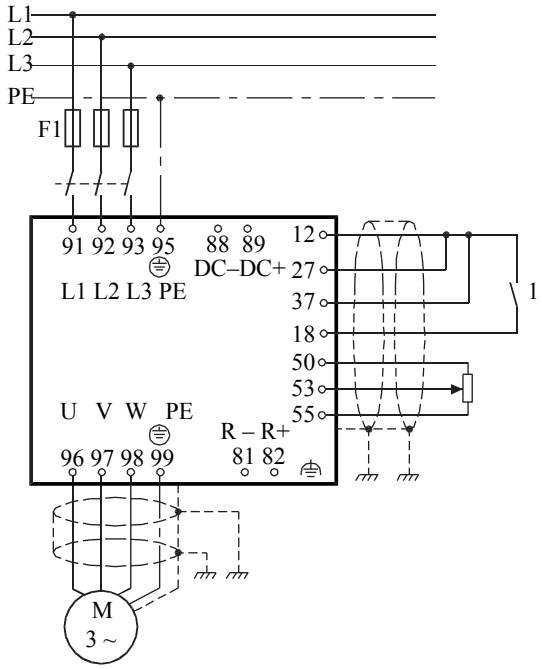

Figure 21: Basic installation for three-phase line power

4.4 Installation requirements

4.4.1 Lifting

WARNING:

Follow local safety regulations for lifting heavy weights. Failure to follow recommendations and local safety regulations can result in death or serious injury.

- Check the weight of the unit to determine a safe lifting method.
- Ensure that the lifting device is suitable for the task.
- If necessary, plan for a hoist, crane, or forklift with the appropriate rating to move the unit.
- For lifting, use hoist rings on the unit, when provided.

Always lift the adjustable frequency drive using the dedicated lifting holes. For all D enclosures, use a bar to avoid bending the lifting holes of the adjustable frequency drive.

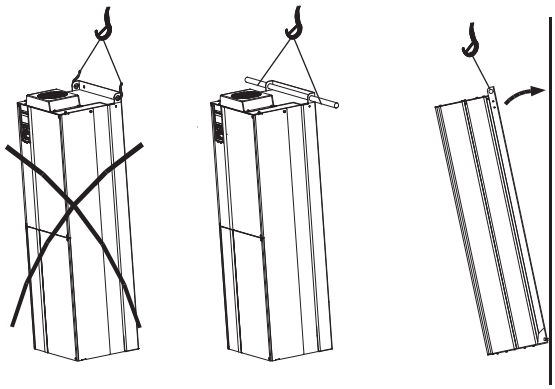

Figure 22: Recommended lifting method, frame size D

NOTICE:

The lifting bar must be able to handle the weight of the adjustable frequency drive. See Mechanical Dimensions for the weight of the different frame sizes. Maximum diameter for bar is 1 in (2.5 cm). The angle from the top of the drive to the lifting cable should be 60°C or greater.

4.4.2 Cooling

- To provide cooling airflow, mount the unit to a solid flat surface or to the optional back plate.
- Top and bottom clearance for air cooling must be provided. Generally, 100–225 mm (4–10 in) is required.

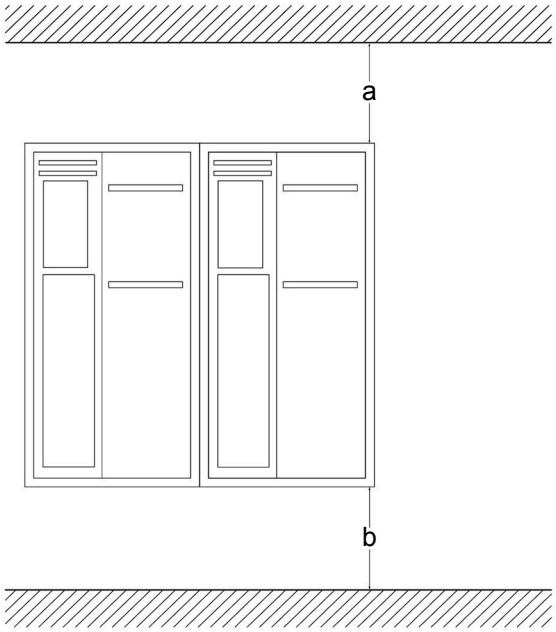

Enclosure	A2–A5	B1–B4	C1, C3	C2, C4
a/b	100 mm (3.9 in)	200 mm (7.9 in)	200 mm (7.9 in)	225 mm (8.9 in)

- Improper mounting can result in overheating and reduced performance.
- Derating for temperatures starting between 40°C (104°F) and 50°C (122°F) and elevation 1000 m (3300 ft) above sea level must be considered.

4.4.3 Mounting

- Mount the unit vertically.
- The frequency converter allows side by side installation.

- Ensure that the strength of the mounting location will support the unit weight.
- Mount the unit to a solid flat surface or to the optional back plate to provide cooling airflow.

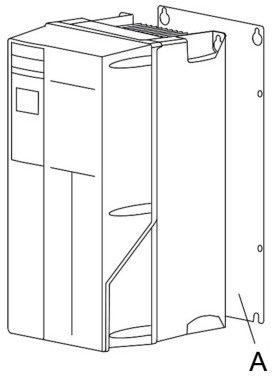

Figure 23: Mounting with back plate

A Properly installed back plate

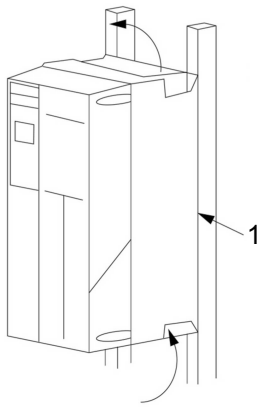

Figure 24: Mounting with railings

1 Back plate[1]

4.4.4 Terminal and connection

Take the following terminal positions into consideration when you design for cable access.

Be aware that the power cables are heavy and hard to bend. Give thought to the optimum position of the adjustable frequency drive for ensuring easy installation of the cables.

Note: IP20 Chassis is for D3h and D4h, and 3R is for D1h and D2h only.

Terminal locations – D enclosures

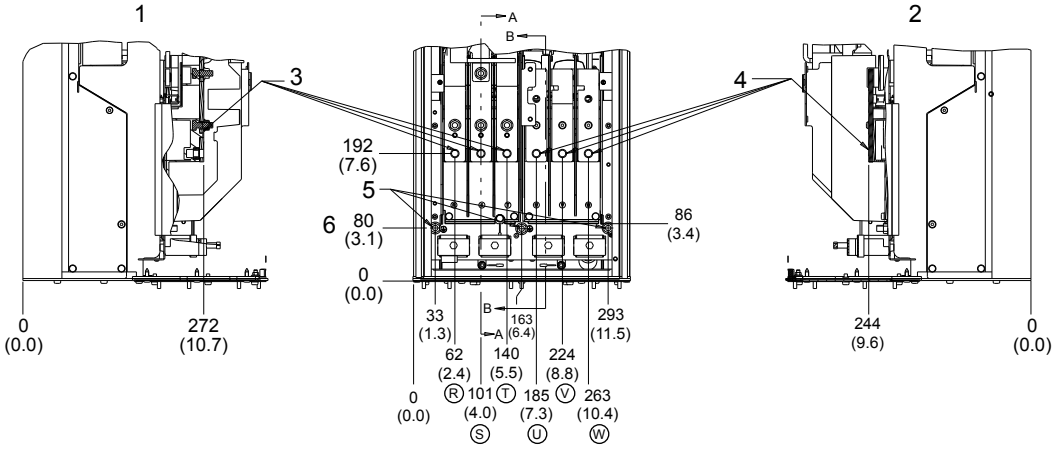

Figure 25: Terminal locations – D1h

1. Section A-A Mains terminal
2. Section B-B Motor terminals
3. Mains terminal
4. Motor terminal
5. 3X M8X20 stud with nut
6. Ground

[1] Back plate is needed when mounted on railings.

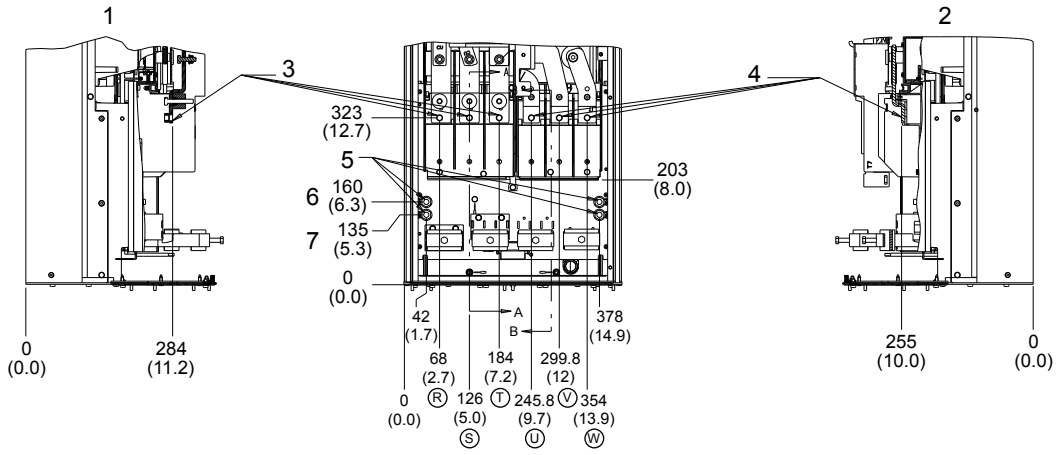

Figure 26: Terminal locations – D2h

1. Section A-A Mains terminal
2. Section B-B Motor terminals
3. Mains terminal
4. Motor terminal
5. 4X M10X20 stud with nut
6. 2X Ground
7. 2X Ground

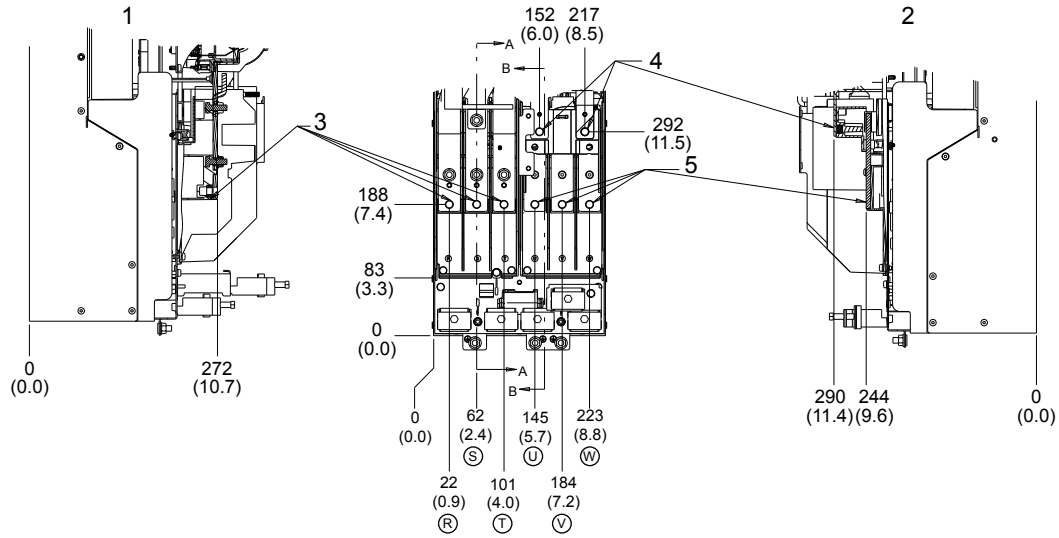

Figure 27: Terminal locations – D3h

1. Section A-A Mains terminal
2. Section B-B Motor terminals and brake / regen terminals
3. Mains terminal
4. Brake / regen terminals
5. Motor terminal

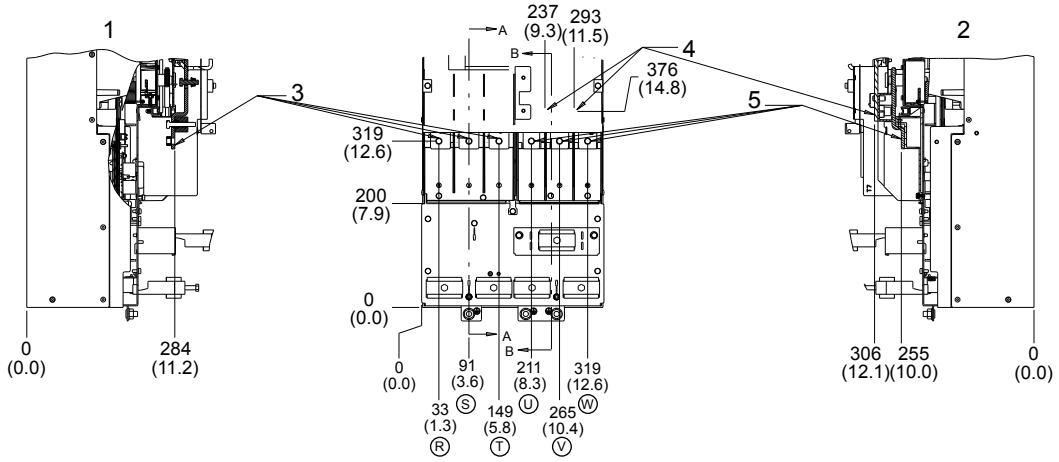

Figure 28: Terminal locations – D4h

1. Section A-A Mains terminal
2. Section B-B Motor terminals and brake / regen terminals
3. Mains terminal
4. Brake / regen terminals
5. Motor terminal

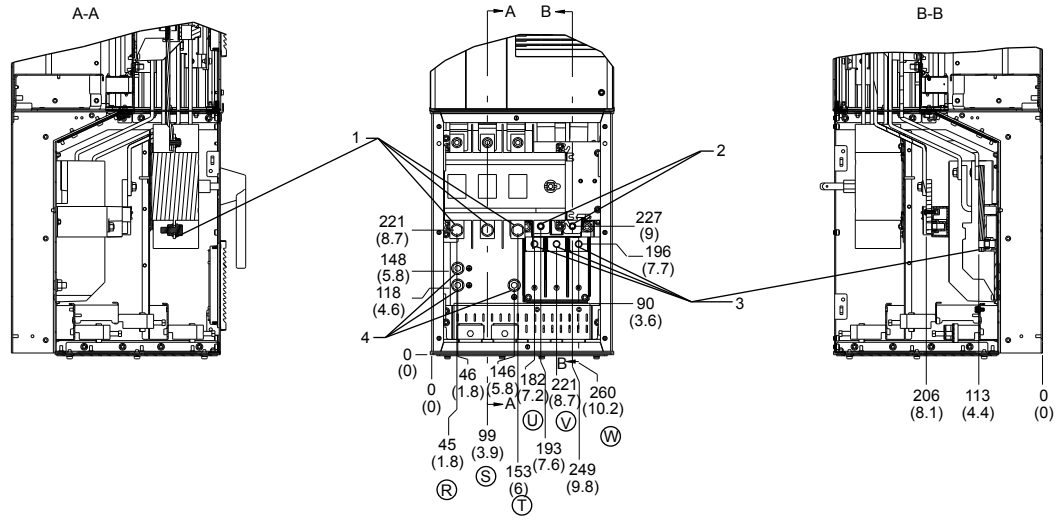

Figure 29: Terminal locations – D5h with disconnect option

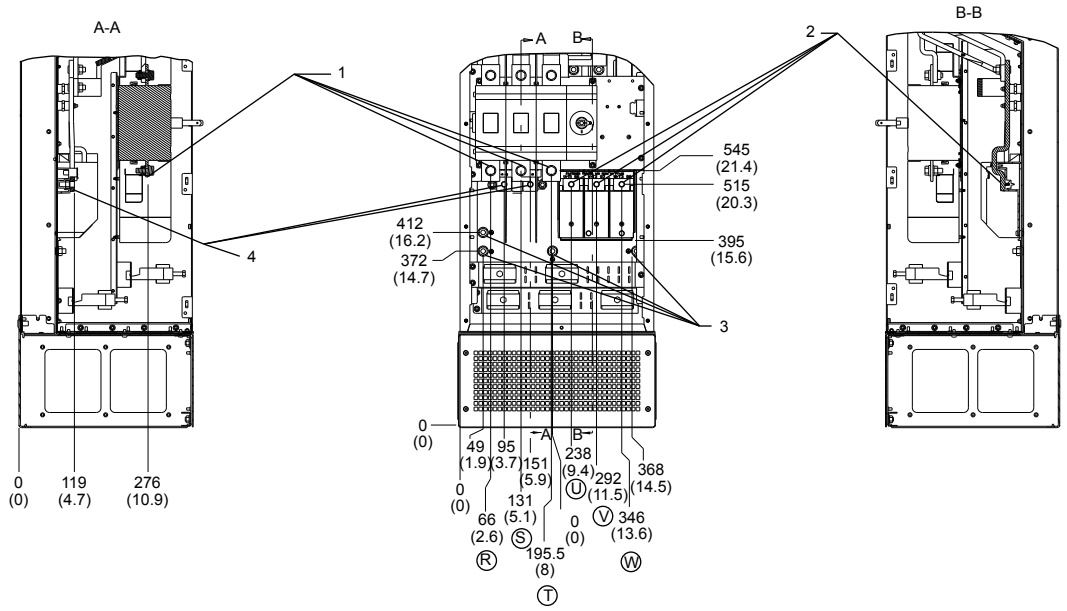

Figure 30: Terminal locations – D7h with disconnect option

1. Mains terminals
2. Brake terminals
3. Motor terminals
4. Earth/Ground terminals

4.4.5 Gland/Conduit entry IP21 (NEMA 1) and IP54 (NEMA12)

Cables are connected through the gland plate from the bottom. Remove the plate and plan where to place the entry for the glands or conduits.

Prepare holes in the marked area in below illustration.

NOTICE:

The gland plate must be fitted to the frequency converter to ensure the specified protection degree, as well as ensuring proper cooling of the unit. If the gland plate is not mounted, the frequency converter may trip on Alarm 69, Pwr. Card Temp.

4.4.6 NEMA-3R cover kit

The NEMA 3R cover kit is designed for D1h and D2h enclosure sizes for the following applications:

- This kit adds a cover to the outside vents of the frequency converter and provides NEMA 3R compliant protection against weather and hosed water. The kit is used only with frequency converters that have the enclosure Code C-N3R.

The NEMA 3R kit contains the following parts:

- Top plate (1)
- Gland plate with attached gasket (1)
- NEMA 3R cover (1)
- Adhesive label (1)
- 3–sectioned plastic bag containing:
  - For top plate, lifting eyelets (2) and screws (6) without captive washers.
  - For gland plate, screws (6) for D1h or (8) for D2h. The screws have captive washers.
  - For NEMA 3R cover, screws (6) with captive washers.

4.4.7 Install the top plate

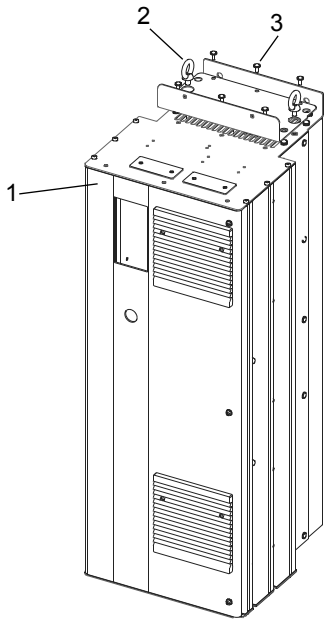

Figure 31: Installing NEMA 3R Top Plate

1. Top plate
2. Eye bolt
3. Screw without captive washer

1. Remove the four (4) screws along the back side of the top vent opening.
2. Place the top plate over the top vent opening.
3. Secure the top plate with the six (6) screws without captive washers provided in the bag. Torque to 2.3 Nm (20 in/lbs).
4. If lifting eyebolts are needed for the application, remove the plated eyebolts that came with the unit and replace with the stainless steel eyebolts provided in the bag.

NOTICE:

UL NEMA 3R RATING

Eyebolts are not required to meet UL NEMA 3R rating.

4.4.8 Install the gland plate

1. Remove the existing gland plate and gasket from the bottom of the frequency converter by removing 6 screws (T25) from the D1h or 8 screws (T25) from the D2h.
2. Make sure that the flange on the frequency converter is smooth and clean in preparation for the new gasket.
3. Place the new gland plate over the opening, with the gasket side facing the opening.
4. Secure the new gland plate to the frequency converter using the provided screws with captive washers (6) for D1h or (8) for the D2h. Torque to 2.3 Nm (20 in/lbs).

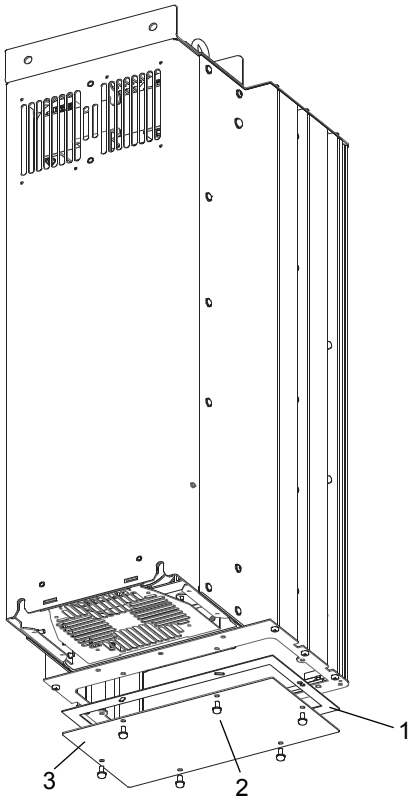

Figure 32: Removing Gland Plate

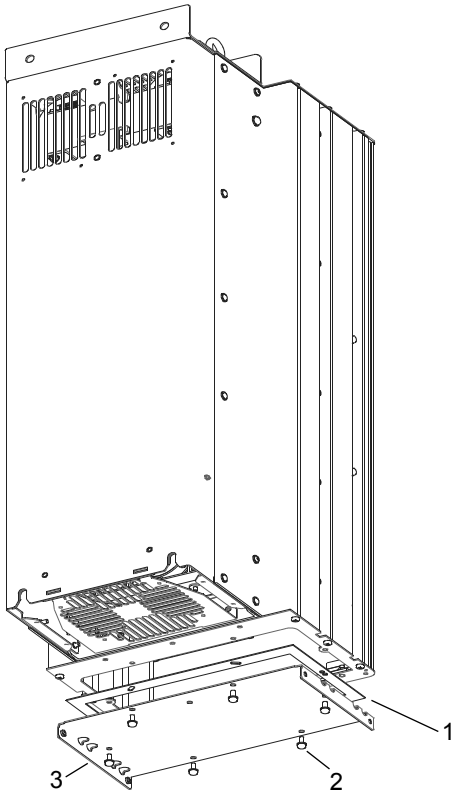

Figure 33: Installing NEMA 3R Gland Plate

1. Gasket
2. Screw with captive washer
3. Gland plate

4.4.9 Install the NEMA 3R cover

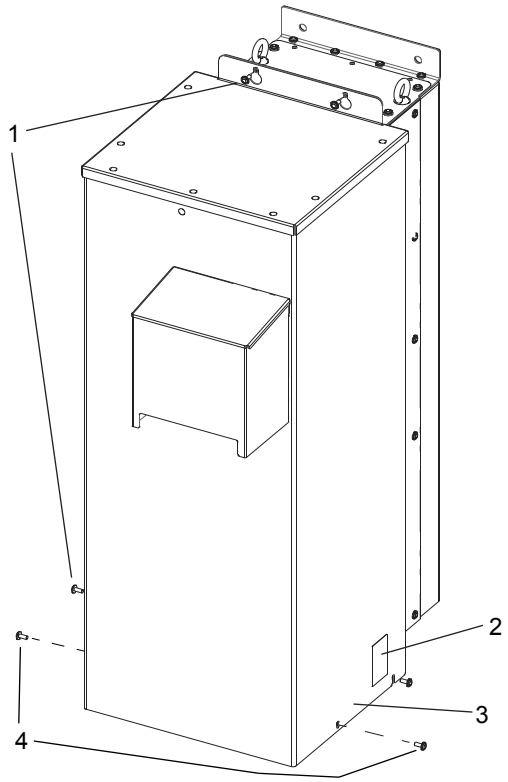

Figure 34: Installing NEMA 3R Cover

1. Screw without captive washer
2. NEMA 3R sticker
3. NEMA 3R cover
4. Screws to remove for taking off the NEMA 3R cover

1. Set the NEMA 3R cover over the top of the frequency converter. Align the NEMA 3R cover with the screw holes on the top mounting plate and the screw holes on the side of the unit.
2. Using the 6 screws provided in the bag, loosely secure the cover to the frequency converter.
3. Torque all 6 screws to 2.3 Nm (20 in/lbs).
4. Apply adhesive label to the cover.

To remove the NEMA 3R cover after it has been installed, remove the front 2 screws on the bottom of the unit. The cover can be removed after the other 4 screws are loosened since the cover has slotted screw openings.

4.4.9.1 Calculating Nominal Current when Using a NEMA 3R Cover

The nominal current of a frequency converter with the NEMA 3R cover is 88% of its current rating. For example, in a N315 standard IP21 frequency converter, the nominal output current at 460/480V in nominal overload mode is 588 A. With the NEMA 3R cover, the normal overload current is 0.88 x 588 = 517.4 A. The same calculation is used to calculate the nominal current for the high overload mode.

4.4.9.2 Derating For Ambient Temperature When Using A NEMA 3R Cover

Using the NEMA 3R cover kit requires derating due to higher ambient temperatures within the enclosure. Using SFAVM (stator flux asynchronous vector modulation) gives greater switching control, but generates more heat than using 60°AVM (asynchronous

vector modulation). SFAVM switches throughout the entire cycle, where 60° AVM only switches 2/3 of the time.

The maximum switching frequency is 16 kHZ for 60° AVM and 10 kHz for SFAVM. The discrete switching frequencies are shown in the following figure.

Table 5: Switching patterns

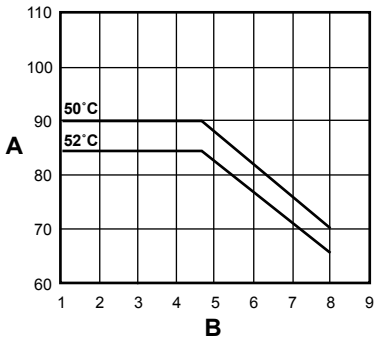

Figure 35: 60° AVM, High Overload HO, 150%

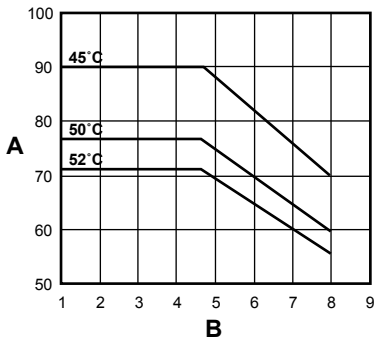

Figure 36: 60° AVM, Normal Overload HO, 110%

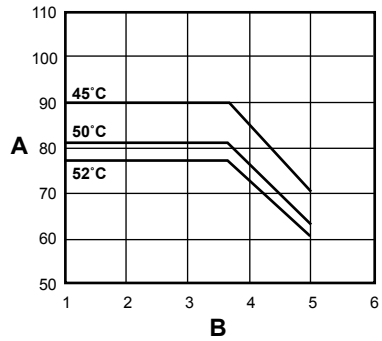

Figure 37: SFAVM, High Overload HO, 150%

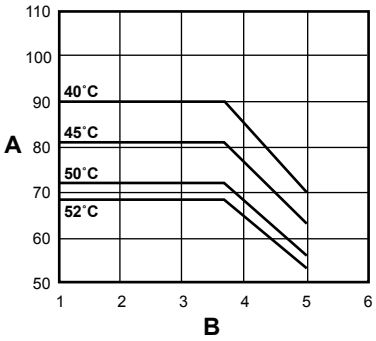

Figure 38: SFAVM, Normal Overload HO, 110%

A % of drive output, nominal HO current

B F_{SW} (KH_Z)

4.4.10 Piping connections

NOTICE:

All plumbing work must be performed by a qualified technician. Always follow all local, state and provincial codes.

A proper installation requires a pressure relief valve, a diaphragm tank, a 1/4" female NPT threaded fitting for the pressure sensor, and properly sized pipe. Piping should be no smaller than pump discharge and/or suction connections. Piping should be kept as short as possible. Avoid the use of unnecessary fittings to minimize friction losses.

CAUTION:

Use pipes suited to the maximum working pressure of the pump. Failure to do so can cause the system to rupture, with the risk of injury.

All joints must be airtight. Use PTFE tape or another type of pressure sealant to seal threaded connections. Please be careful when using thread sealant as any excess that gets inside the pipe may plug the pressure sensor.

Galvanized fittings or pipe should never be connected directly to the stainless steel discharge head or casing as galvanic corrosion may occur. Barb type connectors should always be double clamped.

WARNING:

Do not install any valves (except check valves), flow control devices or filters between the pressure transducer and the pump. It is allowable to run branches off the pipe between the pump and transducer as long as no flow restricting devices are between the pump and transducer.

4.4.11 Diaphragm tank, pressure relief valve, and discharge piping

Use only "pre-charged" tanks on this system. Do not use galvanized tanks. Select an area that is always above 34°F (1.1°C) in which to install the tank, pressure sensor, and pressure relief valve. If this is an area where a water leak or pressure relief valve blow-off may damage property, connect a drain line to the pressure relief valve. Run the drain line from the pressure relief valve to a suitable drain or to an area where water will not damage property.

4.4.12 Diaphragm tank, system pressure

A diaphragm tank (not included) is used to cushion the pressure system during start-up and shut-down. It should be sized to at least 20% of the total capacity of your pump. For example: If your pump is sized for 100 GPM (0.38 m^3/min) then size your tank for at least 20 gallon (75.71 Liters) total volume, not draw down. Pre-charge your bladder tank to 15–20 PSI (1–1.4 Bar) below your system pressure. The controller is pre-set for 50 PSI (3.4 Bar) at the factory. Therefore a 30–35 PSI (2.1–2.4 Bar) pre-charge in your tank would be required. Use the higher tank pre-charge setting if the system drifts over 5 PSI (.34 Bar) at a constant flow rate. NOTE: Pre-charge your tank before filling with water.

CAUTION:

Exceeding the working pressure of the tank can cause the tank to rupture or explode.

4.4.13 Installing the pressure sensor

The pressure sensor requires a 1/4" FNPT fitting for installation. Install the pressure sensor with the electrical connector pointing up to avoid clogging the pressure port with debris. Install the pressure sensor in a straight run of pipe away from elbows or turbulence. For optimum pressure control install the pressure sensor in the same straight run of pipe as the pressure tank. Ensure the pressure sensor is within 10 feet (3 m) of the pressure tank. Installing the pressure sensor far away from the pressure tank may result in pressure oscillations. Do not install the pressure sensor in a location where freezing can occur. A frozen pipe can cause damage to the pressure sensor.

4.4.14 Underwater connection

When using submersible motors, a waterproof connection is required between the drop cable and motor leads. The underwater connection where the drop cable connects to the motor wires must be made using a waterproof heat shrink kit or with equivalent waterproof connection kit. When using a waterproof shrink kit to make the connection:

1. Strip the wires 1/2" and place the heat shrink tubes over the wires.
2. Connect the wires using the crimps.
3. Shrink the tubes over the crimps by heating from the center outward.
   - The sealant in the tube will flow over the ends making a watertight seal.
   - If a heat shrink tube is burnt or split, the connection will need to be remade.

Vinyl electrical tape is not acceptable for underwater splices when using variable speed drives. There is a high potential for leakage to ground through taped joints.

CAUTION:

Failure to use a waterproof heat shrink kit will void the warranty.

Before installing the motor in the well, the drop cable must be connected to the motor wires. Refer to the wire size chart when selecting wire size for the drop cable.

5 Electrical Installation

5.1 Precautions

Electrical Hazard:

- Branch circuit protection required. Provide branch circuit protection in accordance with the electrical regulations locally in force.
- Motor control equipment and electronic controls are connected to hazardous line voltages. Extreme care should be taken to protect against electrical hazard.
- Proper protective grounding of the equipment must be established. Ground currents are higher than 3.5 mA.
- A dedicated ground wire is required.

WARNING:

EQUIPMENT HAZARD. See section 1.2.3 *Safety precautions* on page 6 for details of the safety precaution for Equipment Hazard.

NOTICE:

WIRING ISOLATION. Run input power, motor wiring and control wiring in three separate metallic conduits or use separated shielded cable for high frequency noise isolation. Failure to isolate power, motor and control wiring could result in less than optimum frequency converter and associated equipment performance.

For your safety comply with the following requirements:

- Electronic control equipment is connected to hazardous mains voltage. Extreme care should be taken to protect against electrical hazards when applying power to the unit.
- Run motor cable from multiple frequency converters separately. Induced voltage can charge equipment capacitors even with the equipment turned off and locked.

Overload and equipment protection:

- An electronically activated function within the frequency converter provides overload protection in the motor. The overload calculates the level of increase to activate timing for the trip (controller output stop) function. The higher the current draw, the quicker the trip response. The overload provides Class 20 motor protection. See *Warnings and alarms* on page 240 for details on the trip function.
- All frequency converters must be provided with short-circuit and over-current protection. Input fusing and/or circuit breaker are required to provide this protection. If not factory supplied, fuses must be provided by the installer as part of installations. See *Fuses and circuit breakers* on page 267 for details.

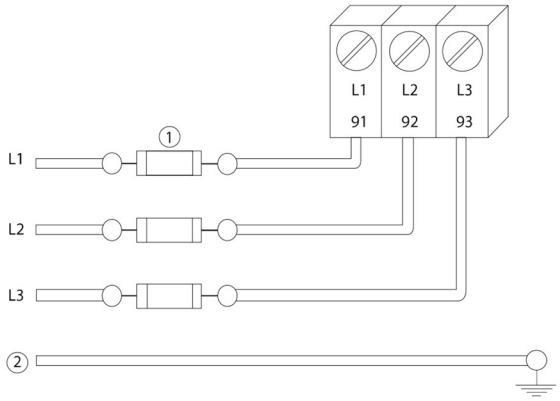

Figure 39: Frequency converter fuses

Item	Description
1	Fuses
2	Ground

Wire type and ratings:

- All wiring must comply with local and national regulations regarding cross section and ambient temperature requirements.
- It is recommended the all power connections be made with a minimum 75°C rated copper wire.
- See *Power-dependent specifications* on page 252 for recommended wire sizes.

5.1.1 Earth (grounding) requirements

WARNING:

For operator safety, it is important to ground the frequency converter properly in accordance with national and local electrical codes as well as instructions contained within this document. Ground currents are higher than 3.5 mA. Failure to ground the frequency converter properly could result in death or serious injury.

NOTICE:

It is the responsibility of the user or certified electrical installer to ensure correct grounding (earthing) of the equipment in accordance with national and local electrical codes and standards.

- Follow all local and national electrical codes to ground electrical equipment properly.
- Proper protective grounding for equipment with ground currents higher the 3.5 mA must be established. Refer to the Leakage Current Hazard in section 1.2.3 *Safety precautions* on page 6 for details of the safety precaution of Leakage Current Hazard.
- A dedicated ground wire is required for input power, motor power and control wiring.
- Use the clamps provided with the equipment for proper ground connections.
- Do not ground one frequency converter to another in a “daisy chain” fashion.
- Keep the ground wire connections as short as possible.
- Using high-strand wire to reduce electrical noise is recommended.
- Follow motor manufacturer wiring requirements.

5.1.2 Using GFCIs (RCDs)

Where Ground Fault Circuit Interrupters (GFCIs) and Residual Current Devices (RCDs), also know as Earth Leakage Circuit Breakers (ELCDs), are used, comply with the following:

- Use GFCIs (RCDs) of type B only which are capable of detecting AC and DC currents.
- Use GFCIs (RCDs) with an inrush delay to prevent faults due to transient earth currents.
- Dimension GFCIs (RCDs) according to the system configuration and environmental considerations.

5.2 Basic electrical connection

This section contains detailed instructions for wiring the frequency converter. The following tasks are described:

- Wiring the motor to the frequency converter output terminals
- Wiring the AC mains to the frequency converter input terminals
- Connecting control and serial communication wiring
- After power has been applied, checking input and motor power; programming control terminals for their intended functions

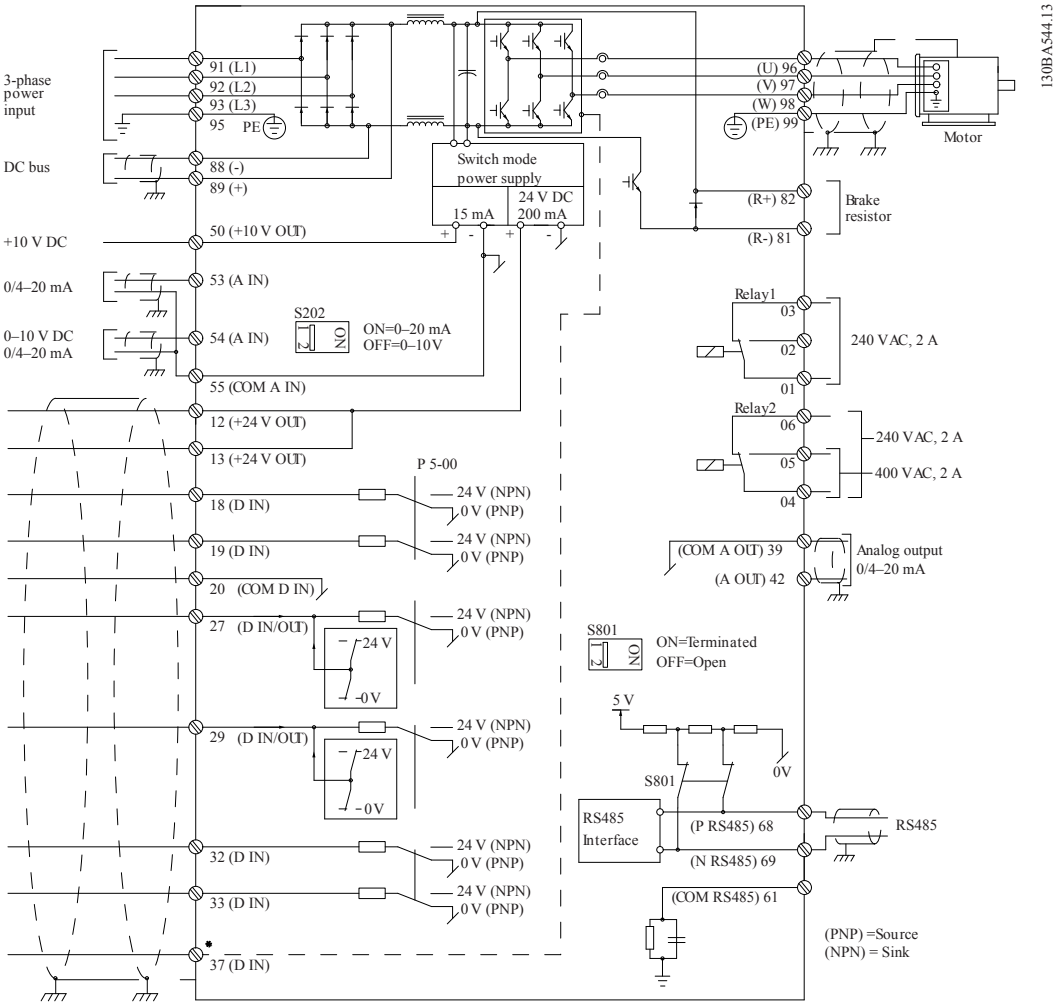

Figure 40: Basic electrical connection

In rare cases, very long cables and analog signals may, depending on installation, result in 50/60 Hz ground loops due to noise from power line supply cables.

If this occurs, it may be necessary to break the shield or insert a 100 nF capacitor between shield and chassis.

Digital and analog inputs and outputs

The digital and analog inputs and outputs must be connected to the adjustable frequency drive common inputs (terminal 20, 55, 39) to avoid ground currents from both groups to

affect other groups. For example, switching on the digital input may disturb the analog input signal.

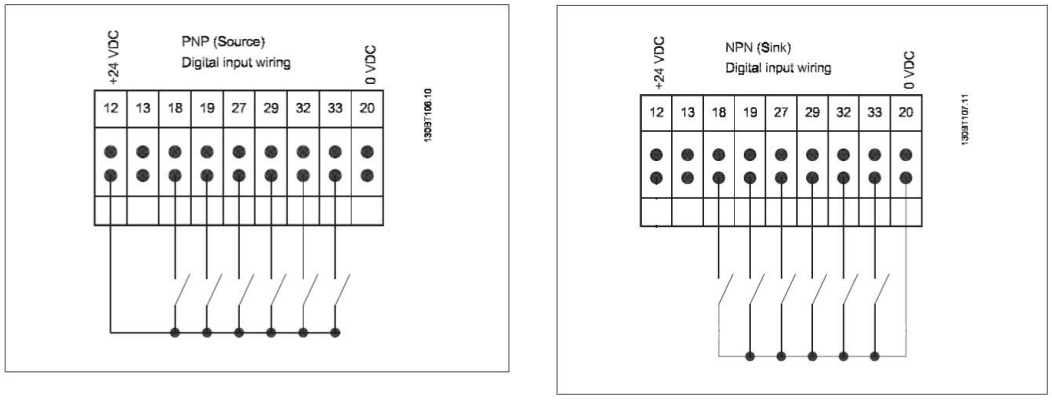

Figure 41: Input polarity of control terminals

Note: To comply with EMC emission specifications, shielded/armored cables are recommended. If an unshielded/unarmored cable is used, see *Power and control wiring for unshielded cables* on page 59.

Connect the wires as described in the Instruction Manual for the adjustable frequency drive. Remember to connect the shields in a proper way to ensure optimum electrical immunity.

5.3 Motor connection

WARNING:

INDUCED VOLTAGE. Run output motor cables from multiple frequency converters separately. Induced voltage from output motor cables run together can charge equipment capacitors even with the equipment turned off and locked out. Failure to run output motor cables separately could result in death or serious injury.

Be sure the following are adhered to:

- For maximum wire sizes, see *Power-dependent specifications* on page 252.
- Comply with local and national electrical codes
- Motor wiring knockouts or access panels are provided at the base of

  IP21

  (Type 1) and higher units
- Do not install power factor correction capacitors between the frequency converter and the motor
- Do not wire a starting or pole-changing device between the frequency converter and the motor
- Connect the 3–phase motor wiring to terminals 96 (U), 97 (V), and 98 (W)
- Ground the cable in accordance with grounding instructions provided
- Torque terminals in accordance with the information provided in *Tightening torques* on page 277
- Follow motor manufacturer wiring requirements

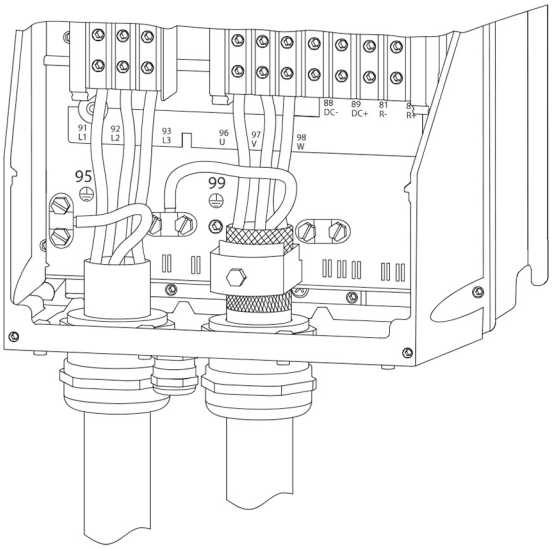

Figure 42: Motor, mains and earth wiring for frame sizes B, C, and D using shielded cable

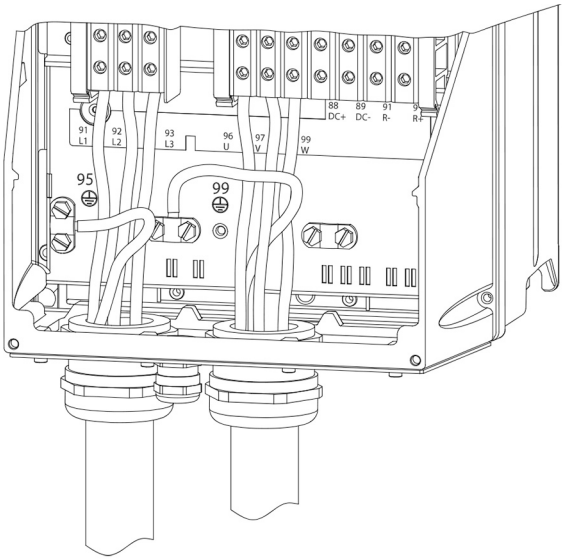

Figure 43: Motor, mains, and earth wiring for frame sizes B, C, and D

The motor must be connected to terminals U/T1/96, V/T2/97, W/T3/98. Ground to terminal 99. All types of three-phase asynchronous standard motors can be used with an adjustable frequency drive unit. The factory setting is for clockwise rotation with the adjustable frequency drive output connected as follows:

Terminal number	Function
96, 97, 98, 99	Line power U/T1, V/T2, W/T3 Ground

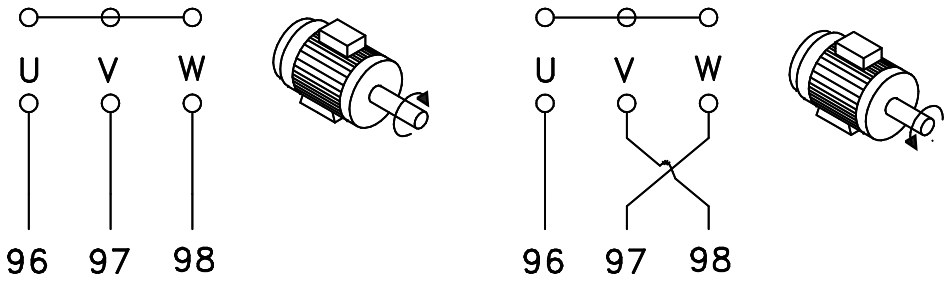

Figure 44: Motor connections

- Terminal U/T1/96 connected to U-phase
- Terminal V/T2/97 connected to V-phase
- Terminal W/T3/98 connected to W-phase

The direction of rotation can be changed by switching two phases in the motor cable or by changing the setting of [4–10] **Motor Speed Direction**. **Motor Rotation Check** can be performed by using [1–28] **Motor Rotation Check** and following the steps that are shown in the display.

Output junction box requirements

The length, minimum 8 ft (2.5 m), and quantity of cables must be equal from each inverter module to the common terminal in the junction box.

- **NOTE:** If the retrofit application requires unequal amounts of wires per phase, consult the factory for requirements and documentation or use the top/bottom entry side cabinet option.

5.3.1 Motor connection for A2 and A3

Follow these drawings step by step for connecting the motor to the frequency converter.

1. Connect the motor earthwire to terminal 99, place motor U, V and W wires in plug and tighten.

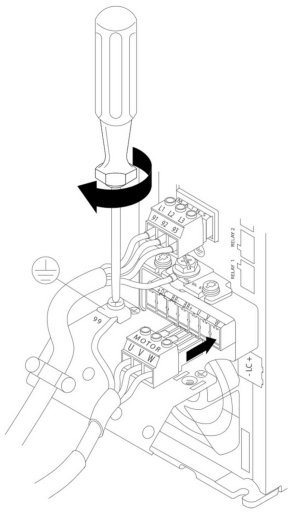

2. Mount cable clamp to ensure 360° connection between chassis and screen, note the outer insulation of the motor cable is removed under the clamp.

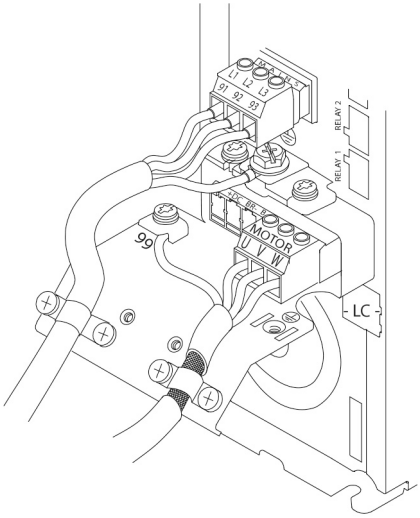

5.3.2 Motor connection for A4 and A5

1. Terminate the motor earth.
2. Place motor U, V and W wires in terminal and tighten.
3. Ensure that the outer insulation of the motor cable is removed under the EMC clamp.

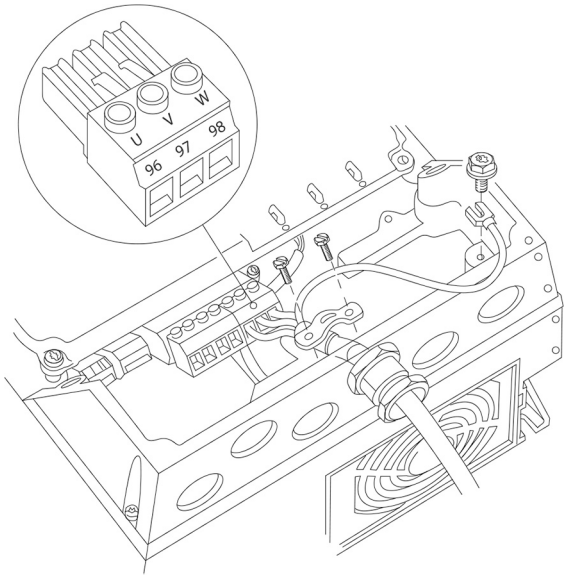

5.3.3 Motor connection for B1 and B2

1. Terminate the motor earth.
2. Place motor U, V and W wires in terminal and tighten.
3. Ensure that the outer insulation of the motor cable is removed under the EMC clamp.

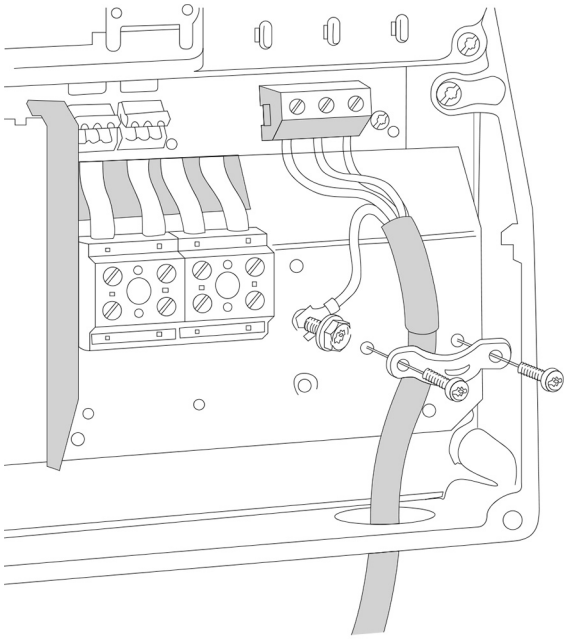

5.3.4 Shielding against electrical noise

Before mounting the line power cable, mount the EMC metal cover to ensure best EMC performance.

- NOTE: The EMC metal cover is only included in units with a H2–RFI Class A2 filter for all D and E frame units.

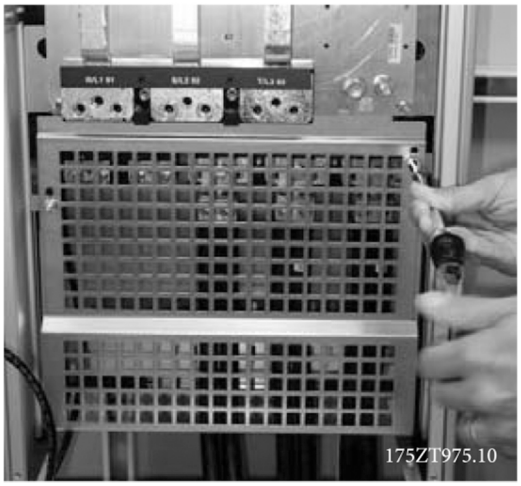

Figure 45: EMC shield

5.4 Power connection

5.4.1 Cable and fusing

WARNING:

For operator's safety, it is important to ground drive properly. Failure to ground drive properly could result in death or serious injury.

NOTICE:

It is the responsibility of the user or certified electrical installer to ensure correct grounding (earthing) of the equipment in accordance with national and local electrical codes and standards.

NOTICE:

All cabling must comply with national and local regulations on cable cross-sections and ambient temperature. UL applications require 167°F (75°C) copper conductors are thermally acceptable for the adjustable frequency drive to use in non-UL applications.

The power cable connections are situated as shown below. Dimensioning of cable cross-section must be done in accordance with the current rating and local regulations. See *Technical Specification* for details.

For protection of the adjustable frequency drive, recommended fuses and/or circuit breaker must be used or the unit must be with built-in fuses. Recommended fuses can be seen in the tables of *Fuses and circuit breakers* on page 267. Always ensure that proper fusing is done according to local regulations.

The AC line input connections are fitted to the line power switch if this is included.

Requirements:

1. Grounding: see *Earth (grounding) requirements* on page 47 and *Grounding* on page 60 for correct grounding.
2. Ensure that the input power source for the controller is locked in the off position.
3. Connect metalized conduit to the controller.
4. Route the power wiring through the conduit.
5. Input power connections:
   - Single-phase drive: Connect the input power wires to terminals labeled L1, L2 on the input side of the disconnect and ⏚ (Ground).

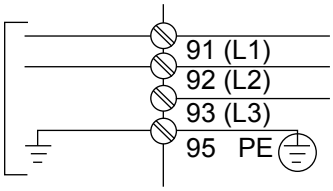

Figure 46: Power input wiring for single-phase drive

   - Three-phase drive: Connect the input power wires to terminals labeled L1, L2, L3 on the input side of the disconnect and ⏚ (Ground).

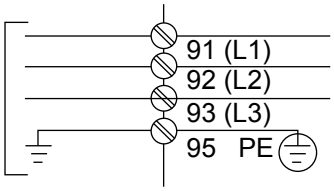

Figure 47: Power input wiring for three-phase drive

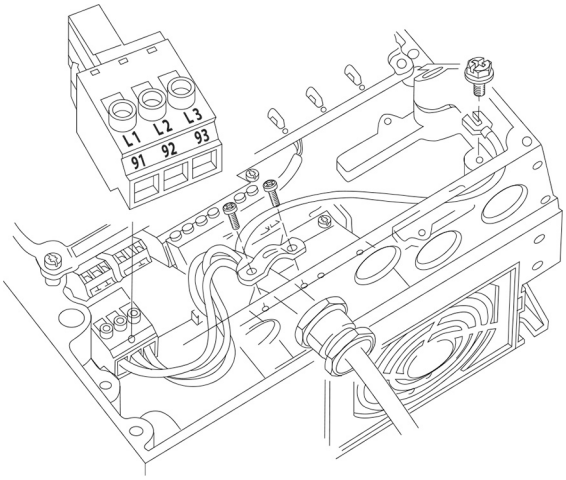

- Depending on the configuration of the equipment, input power will be connected to the mains input terminals or the input disconnect.
- Ground the cable in accordance with grounding instructions in Earth (Grounding) Requirements.
- All frequency converters may be used with an isolated input source as well as with ground reference power lines. When supplied from an isolated mains source (IT mains or floating delta) or TT/TN-S mains with a grounded leg (grounded delta), set 14-50 RFI Filter to OFF. When off, the internal RFI filter capacitors between the chassis and the intermediate circuit are isolated to avoid damage to the intermediate circuit and to reduce earth capacity currents in accordance with IEC 61800-3.

NOTICE:

To comply with EMC emission specifications, shielded/armored cables are recommended. If an unshielded/unarmored cable is used, see *Power and control wiring for unshielded cables* on page 59.

Table 6: EMC categories

Unit size hp [kW]	Power Supply	Classification by categories based on IEC 61800-3
1.5-60 [1.1-45]	3 x 200-240 V	C1(*)
1.5-125 [1.1-90]	3 x 380-480 V	C1(*)

(*) max cable length 164 feet (50 m)

Contact Xylem for information on other sizes and power supply.

NOTICE:

No external EMC filters are required to make the product compliant with the limit values of each category reported in the table above.

See *Technical Specification* for correct dimensioning of motor cable cross-section and length.

5.4.2 Shielding of cables

Avoid installation with twisted shield ends (pigtails). They spoil the shielding effect at higher frequencies. If it is necessary to break the shield to install a motor isolator or motor contactor, the shield must be continued at the lowest possible HF impedence.

Connect the motor cable shield to both the de-coupling plate of the adjustable frequency drive and to the metal housing of the motor.

Make the shield connections with the largest possible surface area (cable clamp). This is done by using the supplied installation devices within the adjustable frequency drive.

5.4.3 Cable-length and cross-section

The adjustable frequency drive has been EMC tested with a given length of cable. Keep the motor cable as short as possible to reduce the noise level and leakage currents.

5.4.4 Switching frequency

When adjustable frequency drives are used together with sine-wave filters to reduce the acoustic noise from a motor, the switching frequency must be set according to the instructions in par. [14–01] Switching Frequency.

Terminal number	96	97	98	99	Description
	U	V	W	PE[1)]	Motor voltage 0–100% of AC line voltage. 3 wires out of motor
	U1 W2	V1 U2	W1 V2	PE[1)]	Delta-connected 6 wires
	U1	V1	W1	PE[1)]	Star-connected U2, V2, W2 U2, V2 and W2 to be interconnected separately

[1)] Protected ground connection

Note: In motors without phase insulation paper or other insulation reinforcement suitable for operation with voltage supply (such as an adjustable frequency drive), fit a sine-wave filter on the output of the adjustable frequency drive.

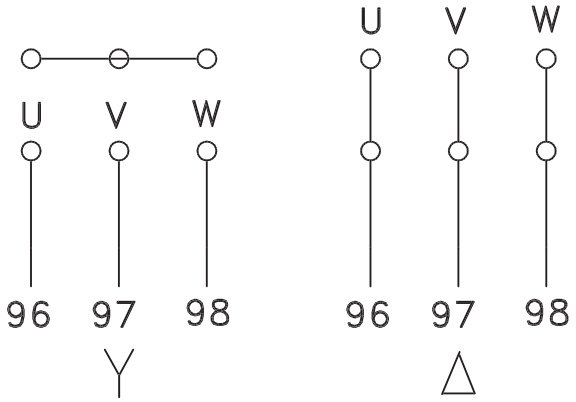

Figure 48: Motor connections

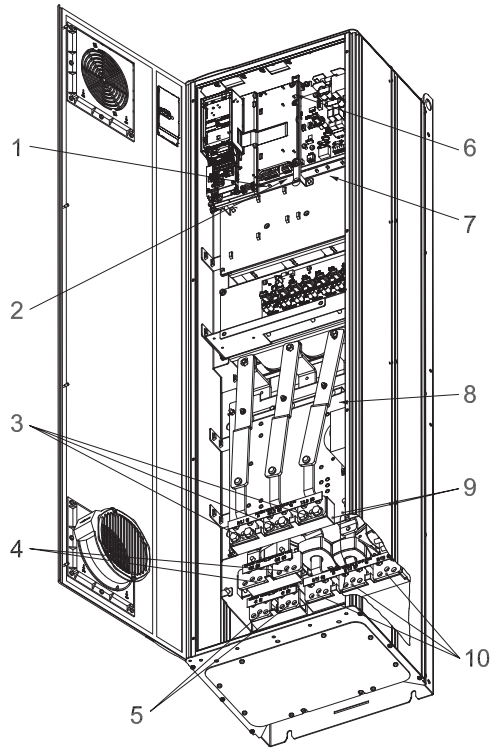

Figure 49: Compact IP 21 (NEMA 1) and IP 54 (NEMA 12), frame size D1

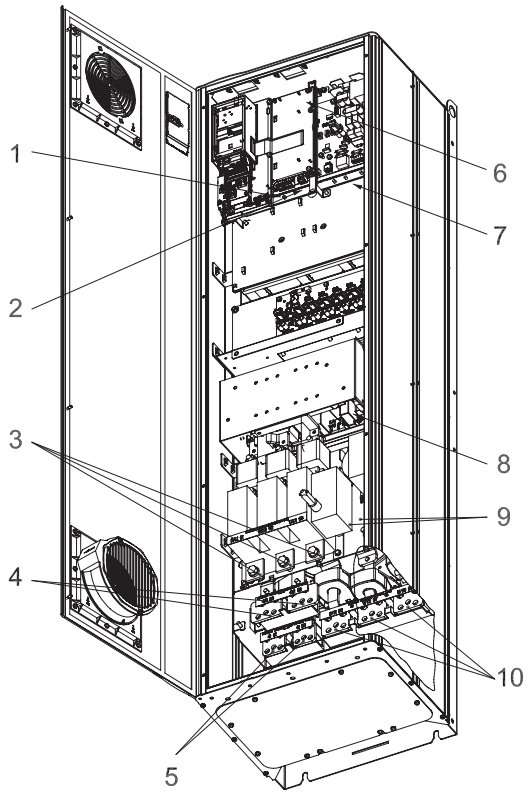

Figure 50: Compact IP 21 (NEMA 1) and IP 54 (NEMA 12) with disconnect, fuse and RFI filter, frame size D2

1. AUX Relay
2. Temperature switch
3. Line
4. Load sharing
5. Brake
6. SMPS Fuse (see *Fuses and circuit breakers* on page 267 for part number)
7. AUX Fan
8. Fan fuse (see *Fuses and circuit breakers* on page 267 for part number)
9. Line power ground
10. Motor

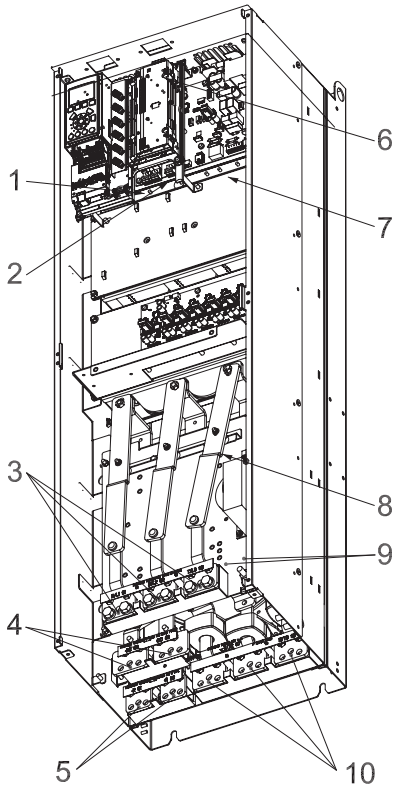

Figure 51: Compact IP 00 (chassis), frame size D3

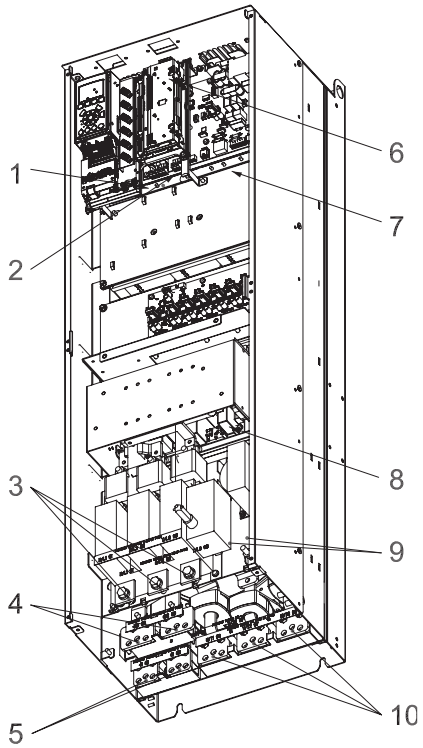

Figure 52: Compact IP 00 (chassis) with disconnect, fuse and RFI filter, frame size D4

1. AUX Relay
2. Temperature switch
3. Line
4. Load sharing
5. Brake
6. SMPS Fuse (see *Fuses and circuit breakers* on page 267 for part number)
7. AUX Fan
8. Fan fuse (see *Fuses and circuit breakers* on page 267 for part number)
9. Line power ground
10. Motor

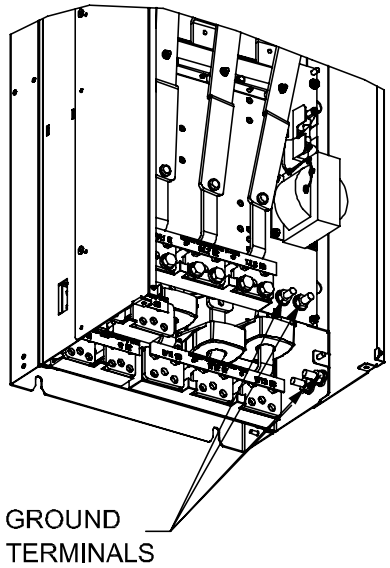

Figure 53: Position of ground terminals IP00, frame sizes D

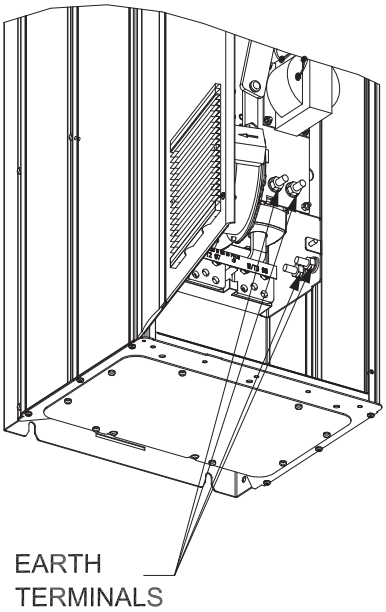

Figure 54: Position of ground terminals IP21 (NEMA type 1) and IP54 (NEMA type 12)

D2 and D4 shown as examples. D1 and D3 are equivalent.

5.5 Power and control wiring for unshielded cables

Electrical Hazard:

Induced Voltage

- Run motor cables from multiple drives separately. Induced voltage from output motor cables run together can change equipment capacitors even with the equipment turned off and locked out. Failure to run output cables separately could result in death or serious injury.

NOTICE:

Run drive input power, motor wiring, and control wiring in three separate metallic conduits or raceways for high frequency noise isolation. Failure to isolate power, motor, and control wiring could result in less than optimum controller and associated equipment performance.

Because the power wiring carries high frequency electrical pulses, it is important that input power and motor power are run in separate conduit. If the incoming power wiring is run in the same conduit as the motor wiring, these pulses can couple electrical noise back onto the building power grid. Control wiring should always be isolated from the high voltage power wiring.

When shielded/armored cable is not used, at least three separate conduits must be connected to the panel option (see figure below).

- Power wiring into the enclosure
- Power wiring from the enclosure to the motor
- Control wiring

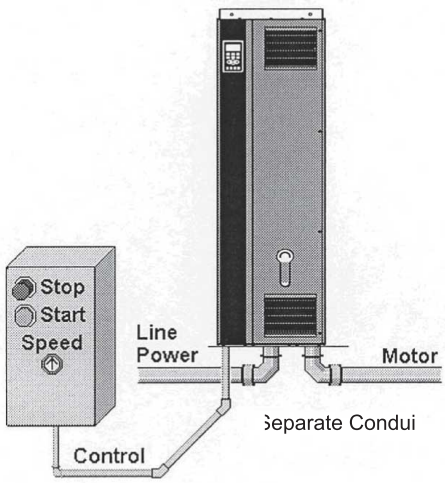

Figure 55: Power and control wiring connection

5.6 Grounding

The following basic issues need to be considered when installing an adjustable frequency drive, so as to obtain electromagnetic compatibility (EMC).

- Safety, grounding: Please note that the adjustable frequency drive has a high leakage current and must be grounded appropriately for safety reasons. Always follow local safety regulations.
- High-frequency grounding: Keep the ground wire connections as short as possible.

Connect the different ground systems at the lowest possible conductor impedance. The lowest possible conductor impedance is obtained by keeping the conductor as short as possible and by using the greatest possible surface area.

The metal cabinets of the different devices are mounted on the cabinet rear plate using the lowest possible HF impedance. This prevents having different HF voltages for the individual devices and prevents the risk of radio interference currents running in connection cables that may be used between the devices, as radio interference is reduced.

In order to obtain a low HF impedance, use the fastening bolts of the devices as HF connections to the rear plate. It is necessary to remove insulating paint and the like from the fastening points.

5.7 Extra protection (RCD)

Earth Leakage Circuit Breaker (ELCB) relays, multiple protective grounding or grounding can be used as extra protection, provided that local safety regulations are complied with.

In the case of a ground fault, a DC component may develop in the fault current.

If ELCB relays are used, local regulations must be observed. Relays must be suitable for protection of 3–phase equipment with a bridge rectifier and for a brief discharge on power-up.

See also the section Special Conditions in the VFD Design Guide FC102.

5.8 Torque

When tightening all electrical connections, it is very important to tighten with the correct torque. Too low or too high torque results in a bad electrical connection. Use a torque wrench to ensure correct torque.

See *Tightening torques* on page 277 for details.

5.9 Shielded cables

It is important that shielded and armored cables are connected properly to ensure high EMC immunity and low emissions.

Connection can be made by either cable connectors or clamps:

- EMC cable connectors: Generally available cable connectors can be used to ensure an optimum EMC connection.
- EMC cable clamp: Clamps allowing for easy connection are supplied with the adjustable frequency drive.

5.10 Control wiring

Make sure that the following are adhered to:

- Run input power and control wiring in separate metallic conduits or raceways for high frequency isolation. Failure to isolate power, motor, and control wiring could result in less than optimum drive and associated equipment performance.
- Use control wiring rated for 600 V for 480 V and 600 V drives and 300 V for 200–240 V drives.
- Isolate control wiring from high power components in the frequency converter.
- If the frequency converter is connected to a thermistor, for Protective Extra Low Voltage (PELV) isolation, optional thermistor control wiring must be reinforced/double insulated. A 24 V DC supply voltage is recommended.

5.11 Control wiring access

- Remove access cover plate with a screwdriver.

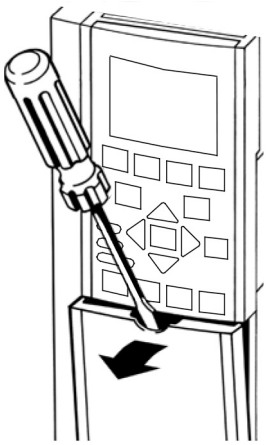

Figure 56: Control wiring access for A2, A3, B3, B4, C3, and C4 enclosures

- Remove front cover by loosening attaching screws.

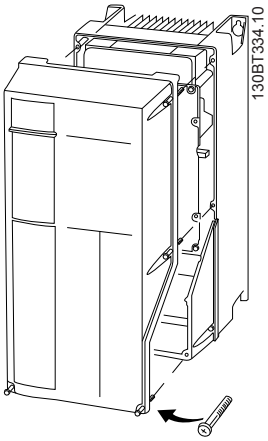

Figure 57: Control wiring access for A4, A5, B1, B2, C1, and C2 enclosures

5.12 Control terminal types

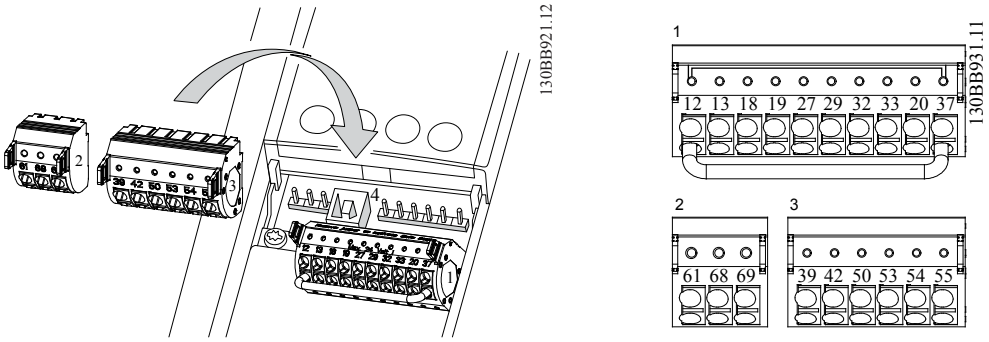

Figure 58: Control terminal locations

- Connector 1 provides four programmable digital inputs terminals, two additional digital terminals programmable as either input or output, a 24 V DC terminal supply voltage, and a common for optional customer supplied 24 V DC voltage.
- Connector 2 terminals (+)68 and (-)69 are for an RS-485 serial communications connection.
- Connector 3 provides two analog inputs, one analog output, 10 V DC supply voltage, and commons for the inputs and output.
- Connector 4 is a USB port available for use with the frequency converter.

- Also provided are two Form C relay outputs that are in various locations depending upon the frequency converter configuration and size.
- Some options available for ordering with the unit may provide additional terminals. See the manual provided with the equipment option for details and configuration.

Table 7: Terminal descriptions

	Terminal number	Parameter number	Default setting or function	Description
Relay outputs	01, 02, 03	[5–40] Relay 1	[51] MCO controlled (North America) [160] No Alarm (International)	Form C Relay output. Usable for AC or DC voltages and either resistive or inductive loads. Refer to *Relay wiring* on page 69 for relay contact current and voltage ratings.
	04, 05, 06	[5–40] Relay 2	[51] MCO controlled (North America) [5] Running (International)	

	Terminal number	Parameter number	Default setting or function	Description
Digital I/O	12, 13	–	+24V DC	24V DC supply voltage. Maximum output current is 200mA total for all 24V loads. Usable for digital inputs and external transducers.
	18	[5–10]	[8] Start	Start/Stop digital input signal for the drive. Connect input to 24V to start. Open the input to stop. This is a required connection.
	19	[5–11]	[0] No Operation	Unused digital input. This input can be configured for use as a Pump Protect/ External Interlock Warning or Alarm Input. See *Pump protect* on page 69 to enable the Warning or Alarm associated with this input.
	27	[5–12]	[0] No Operation	Unused digital input. This input can be configured for use as a Pump Protect/ External Interlock Warning or Alarm Input. See *Pump protect* on page 69 to enable the Warning or Alarm associated with this input.
	29	[5–13]	[75] MCO Specific	Selectable for digital input that is configured for use as a High Suction Cutout warning/alarm signal. Refer to *Pump protect* on page 69 for details.
	32	[5–14]	[1] Reset	Digital input. Configured for use as a Reset for the No Water/Loss of Prime Restart function. Refer to *Pump protect* on page 69 for details.
	33	[5–15]	[75] MCO Specific	Digital input. Configured for use as a **Setpoint 1**/ **Setpoint 2** select (SP1/ SP2).
	20	–	Common	Common for digital inputs and reference for 24V supply

	Terminal number	Parameter number	Default setting or function	Description
Analog I/O	39	–	AO Common	Common for analog output
	42	[6–50]	[137] Speed 4–20 mA	Analog output. Default setting is 4-20mA signal (500Ω max) based on motor speed. Range is 0 to max speed indicated in [4-14].
	50	–	+10V DC	10V DC analog supply voltage. 15mA maximum.
	53	[6–1*]	Transducer feedback	**Analog Input 53**. Default configuration is 300 psi, 4-20mA pressure transducer input.
	54	[6–2*]	Not Used	**Analog Input 54**
	55	–	AI Common	Common for analog input
Comm.	61	–	Shield Connection	Integrated RC filter for cable shield. ONLY for connecting the shield when experiencing EMC problems.
	68	[8–3*]	+	RS485 interface +
	69	[8–3*]	–	RS485 interface –

5.13 Wiring to control terminals

5.13.1 Unplug terminal connectors

Control terminal connectors can be unplugged from the frequency converter for ease of installation.

5.13.2 Control terminal connections

Wiring to the control terminals

Keep control wires as short as possible and separate them from high-power cables to minimize interference.

1. To connect control wiring to the control terminals, do the following:
   a. Strip the control wire back 9–10mm (0.35–0.40 in)
   b. Insert a screwdriver (2.5–3.5 mm) in the rectangular slot in between two circular holes and push the screwdriver slightly upwards.
   c. Insert the bare control wire in the adjacent circular hole.
   d. Remove the screwdriver. The wire is now mounted to the terminal.
2. To remove the wire from the terminal:
   a. Insert a screwdriver (2.5–3.5 mm) in the rectangular slot and push it down.
   b. Pull out the control wire.

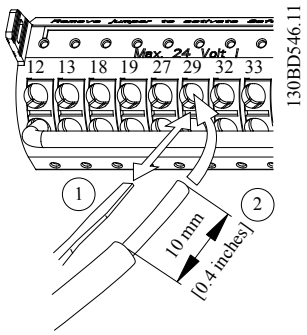

Figure 59: Connecting and disconnecting control wiring

5.13.3 Analog input configuration

There is an analog input switch A54 that can be selected as Voltage (0-10V) or Current (4-20mA).

If the analog input 54 is used, the analog input configuration switch A54 must be set properly.

- Remove power from the controller before changing the analog input configuration switches.
- Remove the local control panel.
- To configure the analog input 54 as a voltage input, set the configuration switch A54 to U (set to the left position).
- Set the configuration switch A54 to I (set to the right position) to enable the input as a current input.

Transducer voltage or current type of switch A54 can be verified at parameter [16-63] Terminal 54 Switch Setting.

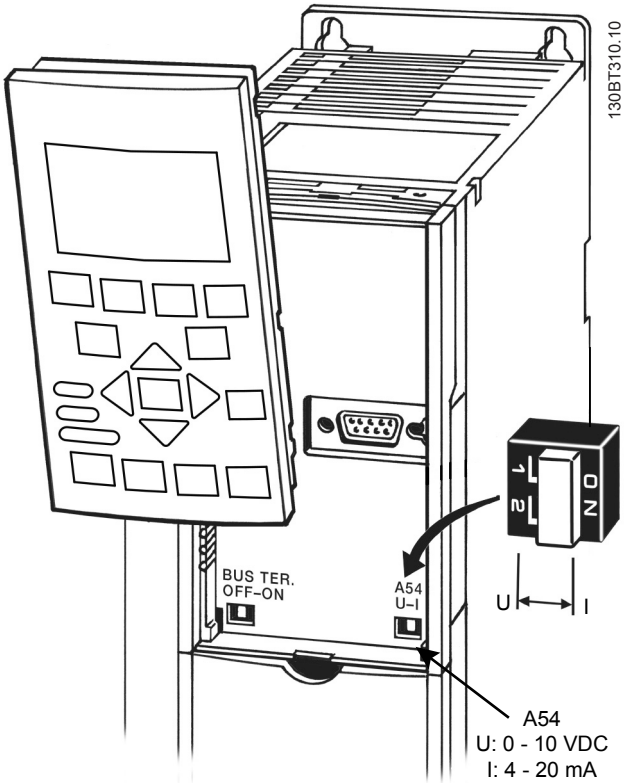

Figure 60: Configuration switch location

WARNING:

Some option cards available for the unit may cover these switches and must be removed to change switch settings. Always remove power to the unit before removing option cards.

Refer to section 1.2 *Safety* on page 5 for safety details.

5.13.4 Control terminal functions

Frequency converter functions are commanded by receiving control input signals.

- Each terminal must be programmed for the function it will be supporting in the parameters associated with that terminal.
- It is important to confirm that the control terminal is programmed for the correct function. See the *Local control panel* on page 75 for detail on accessing parameters and *Programming the controller* on page 106 for details on programming.
- The default terminal programming is intended to initiate frequency converter functioning in a single pump, constant pressure operating more.

5.13.5 Analog input 53

The default operating mode of the frequency converter is “Single Pump Control” for “International” regional setting and “Multipump Control” for “North America” regional setting, Constant Pressure mode. In this mode a feedback signal from a transducer, PLC or other device is required on Analog Input 53 (AI 53) that allows the use of a 300 psi (10 bar), 4-20 mA pressure transducer.

When using the supplied pressure transducer:

1. Connect the feedback (white wire) from the transducer cable to AI 53
2. Connect the power wire (brown wire) to terminal 12 or 13 (24V dc)
3. In cases where the transducer is mounted on ungrounded piping, connect the drain (bare wire) to the spring loaded cable strain relief clamps found below the control terminals.

5.13.6 Using screened control cables

Correct screening

The preferred method in most cases is to secure control and serial communication cables with screening clamps provided at both ends to ensure best possible high frequency cable contact.

If the earth potential between the frequency converter and the PLC is different, electric noise may occur that will disturb the entire system. Solve this problem by fitting an equalizing cable next to the control cable. Minimum cable cross section: 6 AWG or 16 mm^2.

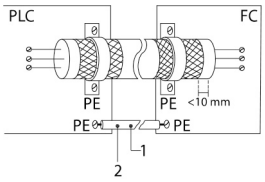

Figure 61: Correct screening

1	Min. 6 AWG or 16 mm^2
2	Equalizing cable

50/60 Hz ground loops

With very long control cables, ground loops may occur. To eliminate ground loops, connect one end of the screen-to-ground with a 100 nF capacitor (keeping leads short).

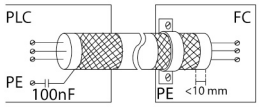

Figure 62: 50/60 Hz ground loops

Avoid EMC noise on serial communication

This terminal is connected to earth via an internal RC link. Use twisted-pair cables to reduce interference between conductors.

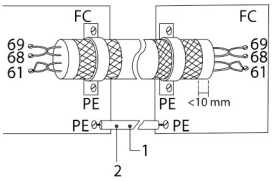

Figure 63: Twisted-pair cables

1	Min. 6 AWG or 16 mm^2
2	Equalizing cable

Alternatively, the connection to terminal 61 can be omitted:

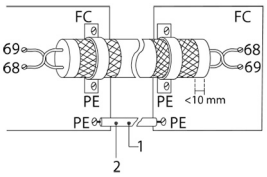

Figure 64: Twisted-pair cables without terminal 61

1	Min. 6 AWG or 16 mm^2
2	Equalizing cable

5.13.7 Serial communication

RS-485 is two-wire bus interface compatible with multi-drop network topology. For example, nodes can be connected as a bus, or via drop cables from a common trunk line. A total of 32 nodes can be connected to one network segment. Repeaters divide network segments. Note that each repeater functions as a node within the segment in which it is installed. Each node connected within a given network must have a unique node address, across all segments. Terminate each segment at both ends, using either the termination switch (BUS TER./S801) of the frequency converters or a biased termination resistor network. Always use screened twisted pair (STP) cable for bus cabling, and always follow good common installation practice.

Low-impedence ground (earth) connection of the screen at every node is important, including at high frequencies. Thus, connect a large surface of the screen to ground (earth) , for example with a cable clamp or a conductive cable gland. It may be necessary to apply potential-equalizing cables to maintain the same ground (earth) potential throughout the network. Particularly in installations with long cables.

To prevent impedence mismatch, always use the same type of cable throughout the entire network. When connecting a motor to the frequency converter, always use screened motor cable.

Table 8: Cable information

Cable	Screened twisted pair (STP)
Impedence	120 Ω

Cable	Screened twisted pair (STP)
Max. cable length [m]	1200 including drop lines 500 station-to-station

5.14 Common terminal wiring configurations

5.14.1 Relay wiring

Each controller has two programmable form C relay outputs. The relay terminals are located in various locations on the controller depending on the frame size. For default settings see *Table 7: Terminal descriptions* on page 63.

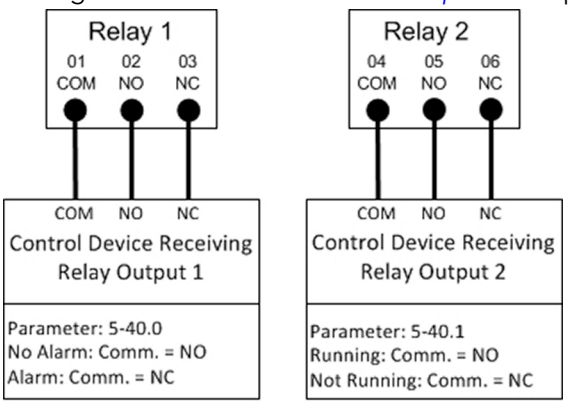

Figure 65: Relay terminal wiring

Table 9: Relay terminal ratings

Programmable relay outputs	2
Relay 01 Terminal number	1–3 (break), 1–2 (make)
Maximum terminal load (AC-1)[1] on 1–3 (NC), 1–2 (NO) (Resistive load)	240 V AC, 2A
Maximum terminal load (AC-15)[1] (Inductive load @ cosφ 0.4)	240 V AC, 0.2A
Maximum terminal load (DC-1)[1] on 1–2 (NO), 1–3 (NC) (Resistive load)	60 V DC, 1A
Maximum terminal load (DC-13)[1] (Inductive load)	24 V DC, 0.1A
Relay 02 Terminal number	4–6 (break), 4–5 (make)
Maximum terminal load (AC-2)[1] on 4–5 (NO) (resistive load)[2,3]	400 V AC, 2A
Maximum terminal load (AC-15)[1] (Inductive load @ cosφ 0.4)	240 V AC, 0.2A
Maximum terminal load (DC-1)[1] on 4–5 (NO) (Resistive load)	80 V DC, 2A
Maximum terminal load (DC-13)[1] on 4–5 (NO) (Inductive load)	24 V DC, 0.1A
Maximum terminal load (AC-1)[1] on 4–6 (NC) (Resistive load)	240 V AC, 2A
Maximum terminal load (AC-15)[1] on 4–6 (NC) (Inductive load @ cosφ 0.4)	240 V AC, 0.2A
Maximum terminal load (DC-1)[1] on 4–6 (NC) (Resistive load)	50 V DC, 2A
Maximum terminal load (DC-13)[1] on 4–6 (NC) (Inductive load)	24 V DC, 0.1A
Minimum terminal load on 1–3 (NC), 1–2 (NO), 4–6 (NC), 4–5 (NO)	24 V DC 10mA, 24 V AC 20mA
Environment according to EN 60664–1	overvoltage category III/pollution degree 2

5.14.2 Pump protect

A *Pump Protect* function can be used to turn off the controller and issue an *alarm 60 (Pump Protect (North America)/External Interlock (International))* when system pressures, temperatures, levels, etc. are outside of the normal operating range for the system. The *Pump Protect* function can be configured on digital input 19, 27 and 29. These inputs can be controlled by an external device such as a suction pressure switch, an over pressure

switch, a temperature switch, a differential pressure switch, etc. The device chosen should be normally closed. The [22-00] **Pump Protect Delay** parameter can be configured to delay the onset of the *Pump Protect (North America)/External Interlock (International) Alarm* to prevent nuisance tripping. When the input is disconnected from the 24V supply, the delay timer will start. If the input remains disconnected for the time indicated in [22-00]**Pump Protect Delay**, the controller stops the motor and issues *Alarm 60 Protect (North America)/External Interlock (International)*. If a *Pump Protect/External Interlock Alarm* is issued, the controller will attempt to restart if the [14-20] **Reset Mode** parameter and the [14-21] **Automatic Restart Time** parameter are set to allow automatic restarting. To prevent an automatic restart set the [14-20] **Reset Mode** to Manual Reset. Note that the [14-20] **Reset Mode** parameter affects all other Alarms that are not listed as a Trip Lock Alarm. Refer to *Warnings and alarms* on page 240 for details.

NOTE: This function can be enabled using the Start-Up Genie (Smart Setup).

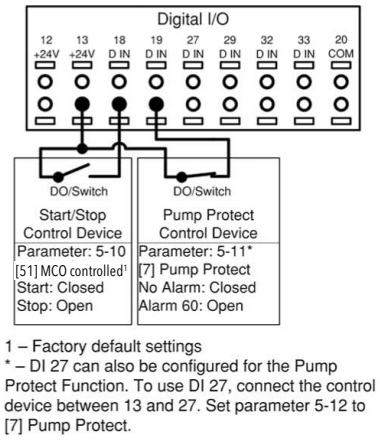

Figure 66: Connections for adding Pump Protect

Table 10: Parameter settings for enabling a Pump Protect/External Interlock Alarm on DI19

Parameter number	Parameter description	Set to
[5–11]*	**Terminal 19 Digital Input**	Pump Protect (North America)/ External Interlock (International)
[22–00]	**Pump Protect Delay**	Set to the desired delay time. If set to 10 seconds, the Pump Protect/ External Interlock Alarm will be issued 10 seconds after the input is disconnected from 24V. The input must remain disconnected for the entire delay time for the alarm to be issued.
[14–20]	**Reset Mode**	Set to the desired number of automatic resets. If a fault occurs more than this setting, a manual reset is required. Set to Manual Reset if no resets are allowed. Default setting is: Automatic reset x 3.
[14–21]	**Automatic Restart Time**	This is the time between when an alarm/warning is issued and when the controller attempts the next restart. Default setting is 30 seconds.

* To configure DI 27, set [5–12] to Pump Protect , and to configure DI 29, also set [5-13] to Pump Protect (North America)/External Interlock (International).

5.14.3 Configuring an additional transducer feedback

An additional transducer can be added to the system to work with closed loop control or for external monitoring. The additional transducer can be either a voltage output or current output transducer. The additional transducer can be added to the unused analog input (AI 53 for current type only or AI 54 for current type or voltage type). The wiring below shows the required connections for an additional transducer on AI 54.

A common use of two pressure transducer feedback signals is to take the difference between the signals to create a differential pressure transducer. To implement a differential pressure transducer with 2 pressure transducers, set [20-20] **Feedback Function** to Difference. The controller will calculate the feedback value as [20-03]**Feedback 2 Source** – [20-00]**Feedback 1 Source**. Be sure to set all unused feedback sources to No Function (parameters [20-00], [20-03] or [20-06]). The parameter listing that follows shows how to configure the additional transducer.

- Analog inputs can be configured using the Start-Up Genie (Smart Setup).
- Be sure to properly set the analog input configuration switch prior to using the analog input. Refer to *Analog input configuration* on page 66 for details.

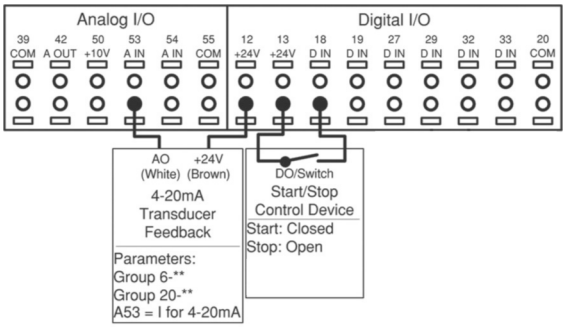

Figure 67: Connections for adding 4–20 mA transducer feedback to AI 53

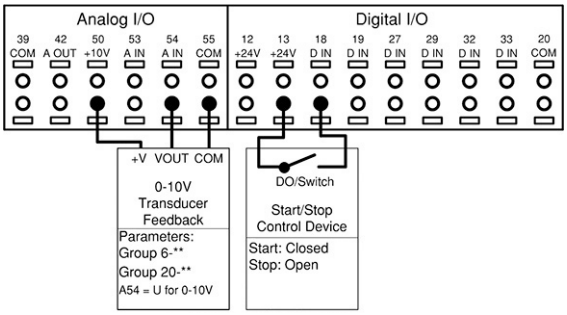

Figure 68: Connections for adding 0–10 V transducer feedback to AI 54

NOTE: Refer to *Analog input configuration* on page 66 for details of setting the DIP switch A54.

In order to set up the controller for closed loop control based on the feedback from an external transducer, set the following parameters:

Table 11: Parameter settings to enable an additional transducer on AI 53

Parameter Number	Parameter Description	Set To
[6-14]*	Terminal 53 Low Ref./Feedb.Value	Minimum transducer feedback value. For example, for a 0-300psi transducer, set to 0.
[6-15]*	Terminal 53 High Ref./Feedb.Value	Maximum transducer feedback value. For example, for a 300psi transducer, set to 300.
[6-17]*	Terminal 53 Sensor Fault (North America) / Live Zero (International)	Enabled

Parameter Number	Parameter Description	Set To
[20-03]	**Feedback 2 Source**	Analog Input 53*
[20-05]	**Feedback 2 Source Unit**	Units for the second feedback source. For a differential pressure transducer, use the same units as found in [20-02], psi is default
[20-12]	**Reference/Feedback Unit**	Select as appropriate for application. For example, set to psi when using pressure feedback.
[20-13]	**Minimum Reference/Feedb.**	Minimum transducer feedback value. For example, for a 0-300psi transducer, set to 0.
[20-14]	**Maximum Reference/Feedb.**	Maximum transducer feedback value. For example, for a 300psi transducer, set to 300.

* To use AI 54 configure parameters [6-24], [6-25], [6-27] and [20-03] for Analog Input 54.

Table 12: Parameter settings for an additional transducer used for monitoring

Parameter number	Description	Set to
[0-24]	**Display Line 3 Large**	Ext. 1 Feedback [Unit]
[21-14]	**Ext.1 Feedback Source**	Analog Input 54*
[21-10]	**Ext.1 Ref./Feedback Unit**	Select as appropriate for application. For example, set to psi when using a pressure transducer.
[21-11]	**Ext.1 Minimum Reference**	Minimum transducer feedback value. For example, for a 0-300psi transducer, set to 0 psi.
[21-12]	**Ext.1 Maximum Reference** Ext. 1 Maximum Reference	Maximum transducer feedback value. For example, for a 300 psi DP transducer, set to 300 psi.
[6-24]*	**Terminal 54 Low Ref./Feedb.Value**	Minimum transducer feedback value. For example, for a 0-300 psi transducer, set to 0.
[6-25]*	**Terminal 54 High Ref./Feedb.Value**	Maximum transducer feedback value. For example, for a 300 psi transducer, set to 300.
[6-27]*	**Terminal 54 Sensor Fault (North America) / Live Zero (International)**	Disabled

* To use AI 53, configure parameters [6-14], [6-15], [6-17] and set [21-14] to Analog Input 53.

5.14.4 Speed control through an analog input

The controller can be configured for speed control through an analog input. The controlling source can be either an external control device such as a PLC, BMS (building management system) or potentiometer. The output from the external control device can be either a voltage or current output signal. Be sure to set the analog input configuration switches based on the type of output signal. The diagrams below show the connections for an external speed command.

- Speed control mode can be configured using the Start-Up Genie (Smart Setup).

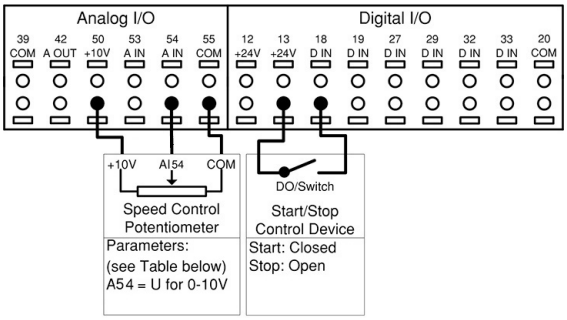

Figure 69: Connections for speed control with external potentiometer on AI 54

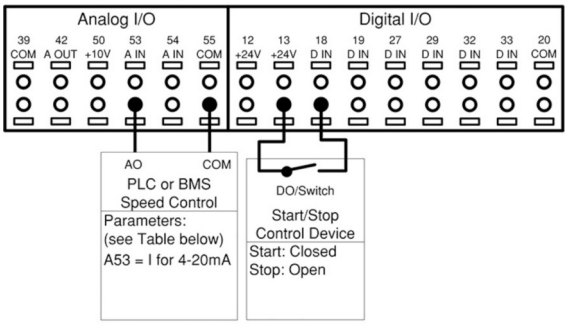

Figure 70: Connections for speed control over current signal from PLC or BMS

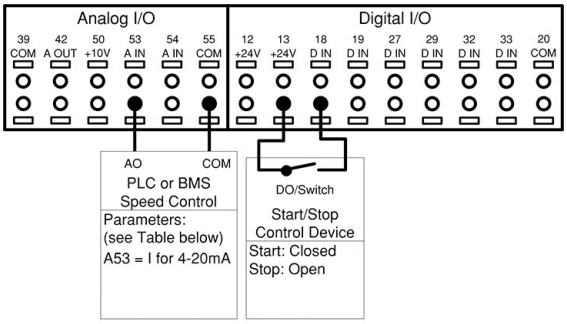

Figure 71: Connections for speed control over voltage signal from PLC or BMS

Table 13: Parameter settings for speed control from external potentiometer, PLC or BMS

Parameter number	Description	Set to
[1-00]	Configuration Mode	Open Loop
[3-02]	Minimum Reference	Set to value corresponding to desired speed at the minimum reference
[3-03]	Maximum Reference	Set to value corresponding to desired speed at the maximum reference
[3-10.0] – [3-10.7]	Preset Reference	0
[3-15]	Reference 1 Source	Analog Input 53
[3-16]	Reference 2 Source	No function
[3-17]	Reference 3 Source	No function
[5-10]	Terminal 18 Digital Input	Start
[6-12]	Terminal 53 Low Current	4 mA
[6-13]	Terminal 53 High Current	20 mA
[6-14]	Terminal 53 Low Ref./Feedb.Value	Set to value corresponding to the commanded speed at the low current.

Parameter number	Description	Set to
[6-15]	**Terminal 53 High Ref./Feedb.Value**	Set to value corresponding to the commanded speed at the high current.
[6-17]	**Terminal 53 Sensor Fault (North America) / Live Zero (International)**	Disabled
[19-00]	**Configuration Mode**	External Reference
[19-40]	**All Zones Failure Function**	Off
[20-00]	**Feedback 1 Source**	Analog Input 53

NOTE: For speed control over voltage signal (DIP switch 54).

- Wire 0-10V signal to terminal #54.
- Set switch A54 = U (left position).
- Set [3-15] **Reference 1 Source** = [20-00] **Feedback 1 Source** = Analog Input 54.
- Set [6-20] **Terminal 54 Low Voltage** = 0 V and [6-21] **Terminal 54 High Voltage** = 10 V.
- Set [6-24] **Terminal 54 Low Ref./Feedb.Value** to value corresponding to the command speed at the low voltage and [6-25] **Terminal 54 High Ref./Feedb.Value** to value corresponding to the command speed at the high voltage.
- Set [6-27] **Terminal 54 Sensor Fault (North America) / Live Zero (International)** to Disable.

5.14.5 Control from external PLC/BMS through communications port

By selecting option [0] External Reference in [19-00] **Configuration Mode**, a BMS or PLC can be connected to the control through the communications port. In this configuration, the BMS or PLC can control the drive by overriding the setpoint, supplying the process variable or by providing a speed command to the drive. Control cables must be braided screened/shielded and the screen must be connected by means of a cable clamp at the controller and at the BMS/PLC. Refer to Using screened control cables section for details on installing shielded/screened cables. The parameter list in the table below shows parameters used to configure communication for two common protocols, Modbus RTU and BACnet. The parameter list in the second table below shows parameters that determine the control source for certain drive functions. Use these parameters to determine whether digital inputs or the BMS/PLC has control of the function.

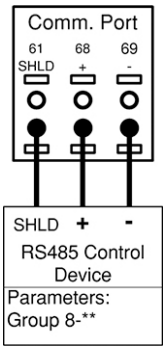

Figure 72: Connections for external control source connected through comm. port

Table 14: Parameter settings for Modbus RTU and BACnet protocols

Parameter Number	Parameter Description	Protocol	
		Modbus RTU	**BACnet**
[8-02]	**Control Source**	FC Port	FC Port
[8-30]	**Protocol**	Modbus RTU	BACnet
[8-31]	**Address**	1	1
[8-32]	**Baud Rate**	19200	9600

Parameter Number	Parameter Description	Protocol	
		Modbus RTU	BACnet
[8-33]	Parity / Stop Bits	Even Parity, 1 Stop bit	No Parity, 1 Stop bit
[8-34]	Estimated Cycle Time	0 ms	0 ms
[8-35]	Minimum Response Delay	10 ms	10 ms
[8-36]	Maximum Response Delay	5000 ms	5000 ms
[8-37]	Maximum Inter-Char Delay	0.86 ms	25 ms

Table 15: Parameters determining control source for controller functions

Parameter number	Description	Set to
[8-01]	Control Site	Determines the location of the control source. Set to Digital and ctrl.word to use both serial bus and digital input control. Set to Digital only to use only the digital inputs. Set to Controlword only to use only the serial bus.
[8-50]	Coasting Select	Determines the control location of the coasting (stop) function. Set to Digital input to use a digital input only. Set to Bus to use only the serial bus only. Set to Logic AND to use the serial bus AND a digital input. Set to Logic OR to use the serial bus OR a digital input.
[8-53]	Start Select	Determines the control location of the start command. Set to Digital input to use a digital input only. Set to Bus to use only the serial bus only. Set to Logic AND to use the serial bus AND a digital input. Set to Logic OR to use the serial bus OR a digital input.
[8-55]	Set-up Select*	Determines the control location of the set-up selection function. Set to Digital input to use a digital input only. Set to Bus to use only the serial bus only. Set to Logic AND to use the serial bus AND a digital input. Set to Logic OR to use the serial bus OR a digital input.
[8-56]	Preset Reference Select*	Determines the control location of the preset reference selection function. Set to Digital input to use a digital input only. Set to Bus to use only the serial bus only. Set to Logic AND to use the serial bus AND a digital input. Set to Logic OR to use the serial bus OR a digital input.

* The Set-up Select and Preset Reference Select functions are used to control other pre-configured functions in the controller. To avoid interfering with these functions, it is recommended to control this function via digital inputs.

5.15 Local control panel

The controller is equipped with a local control panel (LCP). The LCP combines the status screen and keypad found on the front of the controller. The LCP is the user interface to the controller. The LCP allows the user to perform various functions such as:

- Start, stop and control speed with the keypad when in local/Hand mode
- View and display the status of the controller, pump and system
- Provides access to all parameters and start up functions
- Manually reset the controller after a fault

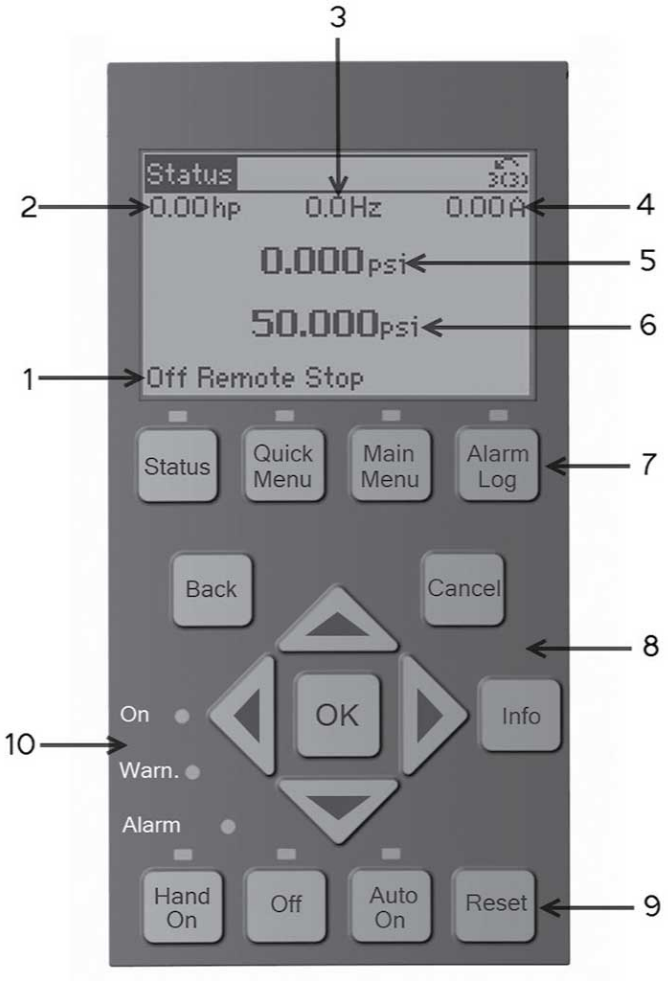

Figure 73: Default configuration

1. Controller Status
2. Motor hp / kW (Parameter [0-20])
3. Motor Frequency (Parameter [0-21])
4. Motor Current (Parameter [0-22])
5. Feedback/Actual Pressure or process variable (Parameter [0-23])
6. Setpoint (Parameter [0-24])
7. Menu keys
8. Navigation keys
9. Operation keys
10. Status lights

The parameters shown are the factory default settings. To display other values, modify parameters [0-20], [0-21], [0-22], [0-23], or [0-24].

5.15.1 Controller status

The controller status line shows operational information about the controller.

The first word in the status line shows the Operation Mode. The table below defines the Operation Mode status.

Off	The controller does not react to any control signal until [Auto On] is pressed.
Auto On	The controller is controlled from the control terminal and/or the serial communication.

Hand On	The controller can be controlled by the navigation keys on the LCP. Stop commands, reset, reversing, DC brake, and other signals applied to the control terminals can override local control.

The second word in the status line shows the Reference Site.

Remote	The speed reference is given from external signals, serial communication, or internal preset references.
Local	The controller converter uses [Hand On] control or reference values from the LCP.

The third word in the status line shows the Operation Status.

AC Brake	AC Brake was selected in [2–10] **Brake Function**. The AC brake over-magnetizes the motor to achieve a controlled slow down.
AMA finish OK	Automatic motor adaptation (AMA) was carried out successfully.
AMA ready	AMA is ready to start. Press [Hand On] to start.
AMA running	AMA process is in progress.
Braking	The brake chopper is in operation. Generative energy is absorbed by the brake resistor.
Braking max.	The brake chopper is in operation. The power limit for the brake resistor defined in [2–12] **Brake Power Limit (kW)** has been reached.
Coast	• Coast inverse was selected as a function for a digital input (parameter group [5–1]* **Digital Inputs**). The corresponding terminal is not connected. • Coast activated by serial communication.
Ctrl. Ramp-down	Control Ramp-down was selected in [14–10] **Mains Failure**. • The mains voltage is below the value set in [14–11] **Mains Voltage at Mains Fault** • The controller ramps down the motor using a controlled ramp down
Current high	The controller output current is above the limit set in [4–51] **Warning Current High**.
Current Low	The controller output current is below the limit set in [4–52] **Warning Speed Low**.
DC Hold	DC hold is selected in [1–80] **Function at Stop** and a stop command is active. The motor is held by a DC current set in [2–00] **DC Hold/Preheat Current**.
DC Stop	The motor is held with a DC current ([2–01] **DC Brake Current**) for a specified time ([2–02] **DC Braking Time**). • DC Brake is activated in [2–03] **DC Brake Cut In Speed [RPM]** and a Stop command is active. • DC Brake (inverse) is selected as a function for a digital input (parameter group [5–1]* **Digital Inputs**). The corresponding terminal is not active. • The DC Brake is activated via serial communication.
Feedback high	The sum of all feedbacks is above the feedback limit set in [4–57] **Warning Feedback High**.
Feedback low	The sum of all actives is below the feedback limit set in [4–56] **Warning Feedback Low**.

Freeze output	The remote reference is active, which holds the present speed. • Freeze output was selected as a function for a digital input (parameter group [5–1]* **Digital Inputs**). The corresponding terminal is active. Speed control is only possible via the terminal functions Speed Up and Speed Down. • Hold ramp is activated via serial communication.
Freeze output request	A freeze output command has been given, but the motor will remain stopped until a run permissive signal is received.
Freeze Reference	Freeze Reference was chosen as a function for a digital input (parameter group [5–1]* **Digital Inputs**). This corresponding terminal is active. The controller saves the actual reference. Changing the reference is now only possible via terminal functions Speed Up and Speed Down.
Jog request	A jog command has been given, but the motor will be stopped until a run permissive signal is received via a digital input.
Jogging	The motor is running as programmed in [3–19] **Jog Speed [RPM]**. • Jog was selected as function for a digital input (parameter group [5–1]* **Digital Inputs**). The corresponding terminal (e.g. Terminal 29) is active. • The Jog Function is activated via the serial communication. • The Jog function was selected as a reaction for a monitoring function (e.g. No signal). The monitoring function is active.
Motor check	In [1–80] **Function at Stop**, *Motor Check* was selected. A stop command is active. To ensure that a motor is connected to the controller, a permanent test current is applied to the motor.
OVC control	Overvoltage control was activated in [2–17] **Over-voltage Control**, *[2] Enabled*. The connected motor is supplying the controller with generative energy. The overvoltage control adjusts the V/Hz ratio to run the motor in controlled mode and to prevent the controller from tripping.
PowerUnit Off	(For controllers with an external 24 V power supply installed only.) Mains supply to the controller is removed, but the control card is supplied by the external 24 V.
Protection md	Protection mode is active. The unit has detected a critical status (an overcurrent or overvoltage). • To avoid tripping, switching frequency is reduced to 4 kHz. • If possible, protection mode ends after approximately 10 s • Protection mode can be restricted in [14–26] **Trip Delay at Inverter Fault**

QStop	The motor is decelerating using [3–81] **Quick Stop Ramp Time**. • Quick stop inverse was chosen as a function for a digital input (parameter group [5–1]* **Digital Inputs**). The corresponding terminal is not active. • The quick stop function was activated via serial communication.
Ramping	The motor is accelerating/decelerating using the active Ramp Up/Down. The reference, a limit value or a standstill is not yet reached.
Ref. high	The sum of all active references is above the reference limit set in [4–55] **Warning Reference High**.
Ref. low	The sum of all active references is below the reference limit set in [4–54] **Warning Reference Low**.
Run on ref.	The controller is running in the reference range. The feedback value matches the setpoint value.
Run request	A start commend has been given, but the motor is stopped until a run permissive signal is received via digital input.
Running	The motor is driven by the controller.
Sleep mode	The energy saving function is enabled. This means that at present the motor has stopped, but that it will restart automatically when required.
Speed high	Motor speed is above the value set in [4–53] **Warning Speed High**.
Speed low	Motor speed below the value set in [4–52] **Warning Speed Low**.
Standby	In Auto On mode, the controller will start the motor with a start signal from a digital input or serial communication.
Start delay	In [1–71] **Start Delay**, a delay starting time was set. A start command is activated and the motor will start after the start delay time expires.
Start fwd/rev	Start forward and start reverse were selected as functions for two different digital inputs (parameter group [5–1]* **Digital Inputs**). The motor will start in forward or reverse depending on which corresponding terminal is activated.
Stop	The controller has received a stop command from the LCP, digital input or serial communication.
Trip	An alarm occurred and the motor is stopped. Once the cause of the alarm is cleared, the controller can be reset manually by pressing [Reset] or remotely by control terminals or serial communication.
Trip lock	An alarm occurred and the motor is stopped. Once the cause of the alarm is cleared, power must be cycled to the controller. The controller can then be reset manually by pressing [Reset] or remotely by control terminals or serial communication.

5.15.2 LCP Parameters

The display configuration shown above represents the default settings. Items 2-6 can be adjusted to display other values. To display other values, modify parameters [0-20], [0-21], [0-22], [0-23] or [0-24] which correspond to 2, 3, 4, 5 and 6 respectively.

5.15.3 Menu keys

Table 16: Function description of menu keys

Key	Function
Status	Pressing the [Status] key switches between different status screens. There are three different status screens; five readouts (default), four line readouts, or Smart Logic Control. • Use the [Status] key for selecting the mode of the LCP or for changing back to Status Display mode from any other menu. • The LCP display contrast can also be adjusted by pressing [Status] plus [▲] or [▼] to adjust the display brightness. • The symbol in the upper-right corner of the display shows the direction of motor rotation (arrow), which setup is active (number) and which is being programmed (number in parenthesis).
Quick Menus	Pressing the [Quick Menu] key provides access to a set of submenus that allows easy access to some common parameters as well as the Start-Up Genie (Smart Setup). The Quick Menus consist of My Personal Menu, Quick Set-up, Function Set-up, Start-Up Genie (Smart Start), Change Made and Loggings.
Main Menu	Pressing the [Main Menu] key allows access to the complete parameter set. Press [Main Menu] twice to access the top-level index. Press [Main Menu] once to return to the last location accessed. Press and hold [Main Menu] for 5 seconds provides access to the Parameter Shortcut. The Parameter shortcut allows the user to enter a parameter number to give direct access to that parameter.
Alarm Log	The [Alarm Log] key allows access to the 5 latest alarms numbers A1–A5. To obtain details about an alarm, use the arrow keys to highlight the alarm number and press OK.

5.15.4 Navigation keys

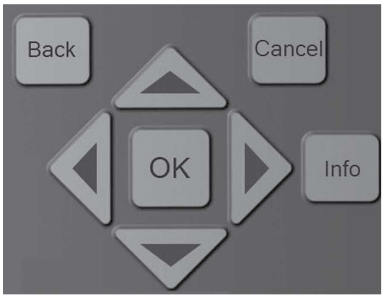

Table 17: Navigation keys functions

Key	Function
Back	Pressing the [Back] key reverts to the previous step or layer in the navigation structure.

Key	Function
Cancel	Pressing the [cancel] button will cancel the last change or command as long as the display has not been changed.
Info	Pressing the [Info] button will display information about a command, parameter, or function in any display window. [Info] provides detailed information when needed. Exit the Info mode by pressing either [Info], [Back], or [Cancel].
OK	[OK] is used for choosing a parameter marked by the cursor and for enabling the change of a parameter.
Arrows	The four navigation arrows are used to navigate between the different choices available in [Quick Menu], [Main Menu] and Alarm Log]. Use these keys to move the cursor.

Table 18: Indicator lights functions

Light	Indicator	Function
Green	ON	The ON light activates when the controller receives power from mains voltage, a DC bus terminal, or an external 24 V supply.
Yellow	WARN	When warning conditions are met, the yellow WARN light comes on and text appears in the display area identifying the problem.
Red	ALARM	A fault condition causes the red alarm light to flash and an alarm text is displayed/

5.15.5 Operation keys

Table 19: Operation keys functions

Hand On	The [Hand On] key enables control of the drive via the LCP interface. Pressing [Hand On] also starts the motor and the speed can be manually adjusted using the arrow keys. The [Hand On] key can be enabled or disabled via parameter [0–40] **[Hand on] Key on LCP**. If [Hand On] is active the drive can be stopped by: • Start signal on DI 18 • The [Off] button • Stop command from serial communication
Off	Pressing the [Off] key will stop the motor. The [Off] key can be enabled or disabled via parameter [0–41] **[Off] Key on LCP**. If no external stop function is selected and the [Off] key is disabled, the motor can only be stopped by disconnecting the mains supply.

Auto On	Pressing the [Auto On] key enables the drive to be controlled via the control terminals and/or serial communication. When a start signal is applied on the control terminals and/or serial communication, the drive will start. This key can be enabled or disabled via [0–42] **[Auto on] Key on LCP**.
Reset	The [Reset] key is used for resetting the controller after an alarm (trip). The key can be enabled or disabled via parameter [0–43] **[Reset] Key on LCP**.

5.15.6 Status lights

If certain threshold values are exceeded, the alarm and/or Warning (Warn.) LED will turn on. If an alarm or warning is active, a status or alarm text will appear on the control panel.

- Yellow Warn. LED: Indicates a warning is active.
- Red Flashing Alarm LED: Indicates an alarm is active.

The On LED is activated when the controller receives power.

- Green On LED: Control section is powered and working.

5.15.7 Parameter backup

Parameter settings are stored internally in the controller. The parameters can be uploaded to the LCP for backup or to easily transfer the parameter settings from one controller to another controller. A factory reset/initialization does not change the data stored in the LCP.

WARNING:

Parameter group [0-5]* **Copy/Save** does not function on the parameter group 19-** Application Parameters. Do not use the parameter group [0-5]* **Copy/Save** to copy or save parameters if the controller has the MCO301 Programmable API option card installed.

To upload parameters (except the parameter group [19-**] **Application Parameters**) to the LCP follow the following procedure:

1. Press [Off] to stop the motor before uploading data.
2. Press [Main Menu] to enter the parameter list.
3. Select [0-**] **Operation / Display**, press [OK].
4. Use the down arrow to scroll to [0-5*] **Copy/Save**, press [OK] to enter the submenu.
5. Press [OK] to enable editing of parameter [0-50] **LCP Copy**.
6. Use the up or down arrows to scroll to ALL to Copy, press [OK] to select.
7. The progress bar will show the status of the process.
8. Press [Status] to return to the main status screen.
9. Press [Auto On] or [Hand On] to resume previous operating mode.

To download parameters (except the parameter group [19-**] **Application Parameters**) to the controller from the LCP follow the procedure below.

1. Press [Off] to stop the motor before uploading data.
2. Press [Main Menu] to enter the parameter list.

3. Select [0-**]**Operation / Display**, press [OK].
4. Use the down arrow to scroll to [0-5*] **Copy/Save**, press [OK] to enter the submenu.
5. Press [OK] to enable editing of parameter [0-50] **LCP Copy**.
6. To copy all data from the LCP, including size dependent data, use the up or down arrows to scroll to *All from LCP*, press [OK] to select. To copy all size independent data, scroll to *Size indep. from LCP*, press [OK] to select.
7. The progress bar will show the status of the process.
8. Press [Status] to return to the main status screen.
9. Press [Auto On] or [Hand On] to resume previous operating mode.

5.15.8 Factory Reset/Initialization

CAUTION:

Before performing the Reset/Initialization, keep the terminal 18 open to avoid an unintended motor rotation.

A factory reset or an initialization can be performed to restore the controller back to default settings. There are multiple ways to perform this function.

Parameter [14-22] **Operation Mode** can be used to perform the factory reset function. Using this method does not change controller data such as operating hours, serial communication selections, fault log, alarm log, and other monitoring functions. To perform the reset through parameter 14-22 perform the following steps.

1. Press [Main Menu] to enter the parameter list.
2. Use the up and down arrows to scroll to [14-**] **Special Functions**, press [OK].
3. Use the up and down arrows to scroll to [14-2*] **Reset Functions**, press [OK].
4. Use the up and down arrows to scroll to [14-22] **Operation Mode**, press [OK].
5. Press [OK] to enable modification of the parameter.
6. Use the up and down arrows to scroll to *Initialization*, press [OK].
7. Remove input power from the unit and wait for the LCP to turn off.
8. Apply power to the unit. The reset is performed at power up.
9. *Alarm 80 Drive Initialized to Default Value* will be displayed.
10. Press [Reset] to return to operation mode.

Another way to perform the factory reset or initialization is to issue a 3 finger reset. The process is described below.

1. Remove power from the unit and wait for the LCP to turn off.
2. Press and hold [Status], [Main Menu], and [OK] at the same time. While holding down the buttons, apply power to the unit.

6 MCO301 Programmable API

6.1 Overview

The MCO301 Programmable API is an advanced option card intended for use with the frequency converters to deploy up to four-pump operation. The MCO301 option cards communicate with each other over RS485 port with proper wiring, shielding and bus termination for satisfactory operation of system as described in the following sections in this chapter.

The MCO301 creates a 19-** parameter group in the frequency converter to support pump control operations. It is required to be pre-programmed in the factory and can be selected as an option A card (For North America only: part number 134B0047, order numbers 9K781 / P2004380) or an option B card (For North America only: part number 134B0048, order numbers 9K782 / P2004381). For other option A or option B cards information, see the Option Card Overview document.

NOTE: Option B is provided by default if no specific option is requested.

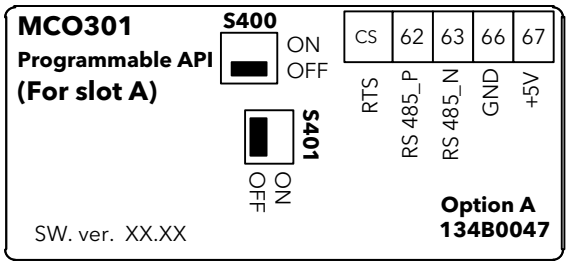

Figure 74: Option A

Table 20: Option A pin descriptions

Option A Terminal No.	Function
CS	RTS
62	RS485_P
63	RS-485_N
66	GND
67	+5VDC

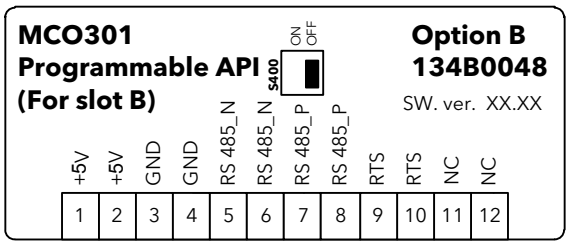

Figure 75: Option B

Table 21: Option B pin descriptions

Option B Terminal No.	Function
1, 2	+5VDC
3, 4	GND
5, 6	RS-485_N
7, 8	RS485_P

Option B Terminal No.	Function
9, 10	RTS
11, 12	NC

6.2 Safety

WARNING:

Refer to section 1.2 *Safety* on page 5 for safety details.

Electrical Hazard:

See section 5.2 *Basic electrical connection* on page 48 in the Electrical Installation chapter.

Be sure that the following are adhered to:

- The mains supply to the frequency converter must be disconnected whenever repair work is to be carried out. Check that the mains supply has been disconnected and that the necessary time has elapsed before removing motor and mains supply plugs.
- The [OFF] button on the control panel of the frequency converter does not disconnect the mains supply and consequently it must not be used as a safety switch.
- The equipment must be properly earthed, the user must be protected against supply voltage and the motor must be protected against overload in accordance with applicable national and local regulations.
- The earth leakage current exceeds 3.5 mA.
- Protection against motor overload is not included in the factory setting. If this function is desired, set par. [1-90] **Motor Thermal Protection** to data value ETR trip 1 [4] or data value ETR warning 1 [3].
- Do not remove the plugs for the motor and mains supply while the frequency converter is connected to mains. Check that the mains supply has been disconnected and that the necessary time has elapsed before removing motor and mains plugs.
- Please note that the frequency converter has more voltage sources than L1, L2 and L3, when load sharing (linking of DC intermediate circuit) or external 24 V DC are installed. Check that all voltage sources have been disconnected and that the necessary time has elapsed before commencing repair work.

6.3 Basic installation instructions for Option A or Option B cards

1. Remove the LCP panel from the frequency converter.
2. Remove the frame located beneath.
3. For the Option A card, push the right connector with the cable terminal facing up into slot A of the control card. For the Option B card, push the connector with the cable terminal facing down into slot B of the control card. The cable up position is frequently most suitable when several frequency converters are installed side by side in a rack, as this position permits shorter cable lengths.
4. Push the LCP frame for the frequency converter into position.
5. Install the LCP panel.
6. Attach cable.
7. Fasten the cable in position by using cable holders. The frequency converter top surface has pre-drilled threaded holes for attaching the cable holders to the unit.

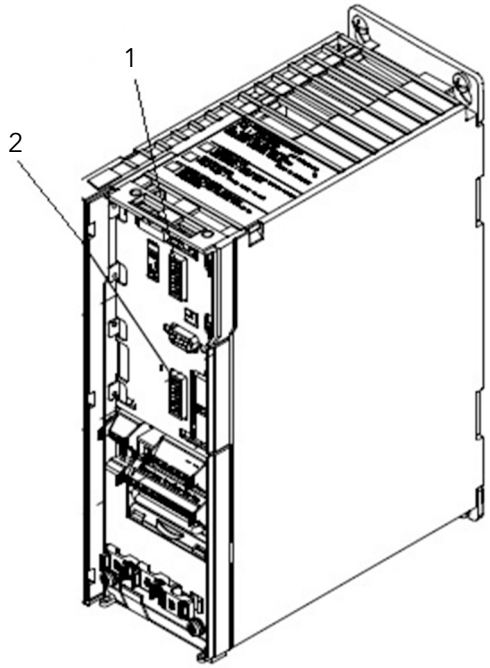

Figure 76: Slot A and Slot B locations

1. Slot A
2. Slot B

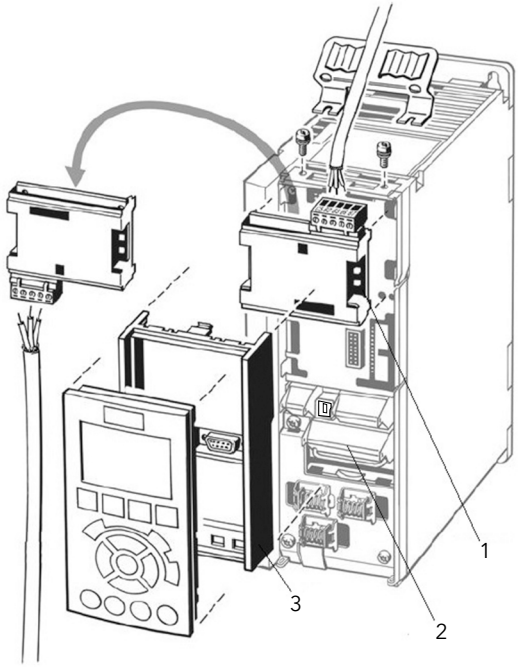

Figure 77: Installation of Option A Card

1. Option A
2. Drive terminals
3. LCP frame

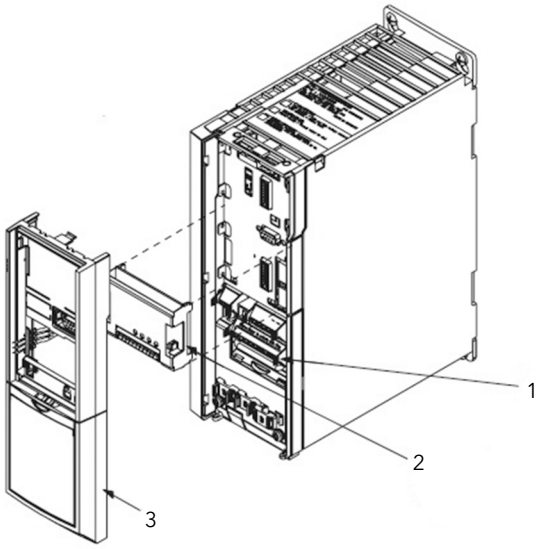

Figure 78: Installation of Option B Card

1. Drive terminals
2. Option B
3. LCP frame

6.4 Installation instructions for additional enclosure sizes

6.4.1 Enclosure Sizes A2, A3, B3, and B4

1. Remove the LCP (local control panel), the terminal cover, and the LCP frame from the frequency converter.
2. Fit the Option A card into slot A or Option B card into slot B.

3. Connect the control cables and relieve the cable. See *Wiring the MCO301 Programmable API* on page 88 and *Shielding for MCO301 Programmable API* on page 91 for details about wiring.
4. Remove the knock-out in the extended LCP frame (supplied).
5. Fit the extended LCP frame and terminal cover on the frequency converter.
6. Fit the LCP or blind cover in the extended LCP frame.
7. installation in enclosure sizes A2, A3, B3, and B4

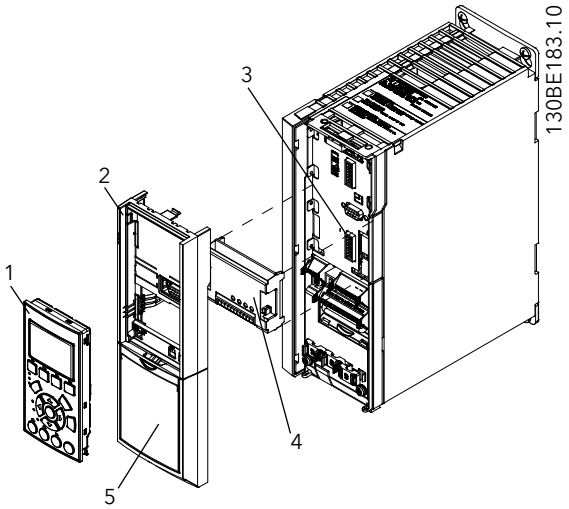

Figure 79: Installation enclosure sizes A2, A3, B3, B4

1	LCP
2	LCP frame
3	Slot B
4	Option B
5	Terminal cover

6.4.2 Enclosure Sizes A5, B1, B2, C, D

1. Remove the LCP (local control panel) and the LCP cradle.
2. Fit the Option A card into slot A or Option B card into slot B.
3. Connect the control cables and relieve the cable. See *Wiring the MCO301 Programmable API* on page 88 and *Shielding for MCO301 Programmable API* on page 91 for details about wiring.
4. Fit the cradle on the frequency converter.
5. Fit the LCP in the cradle.

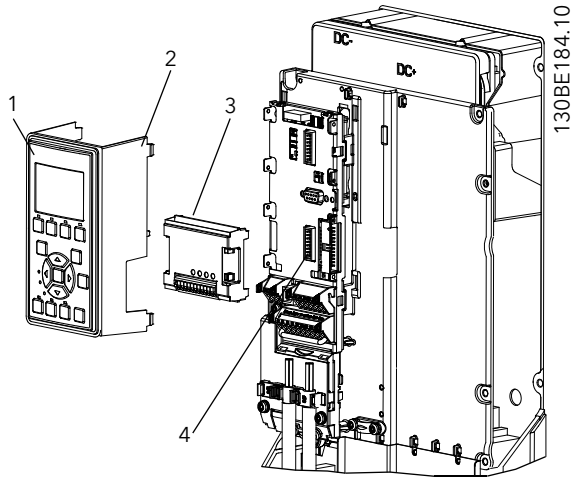

Figure 80: Installation enclosure sizes A5, B1, B2, C, D

1	LCP
2	LCP cradle
3	Option B card
4	Slot B

6.5 Wiring the MCO301 Programmable API

6.5.1 Option A wiring

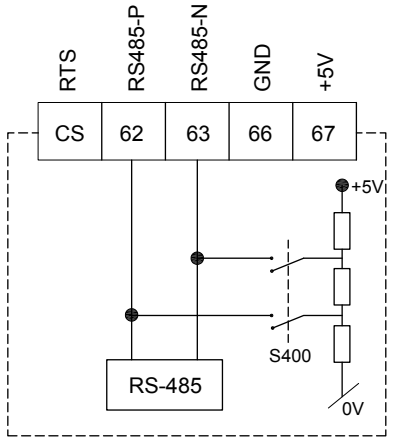

Figure 81: Option A MCO301 Programmable API Termination

6.5.1.1 Fixed Speed Follower wiring

- No wiring connection is required for the MCO301 Programmable API option A card.
- See the following Fixed Speed Follower wiring diagram for the connections from the run relay RR1, run relay RR2 and run relay RR3 (for connecting/disconnecting pump #2, pump #3 and pump # 4 to/from AC power lines) to the 9-pin connector and Relay 1 of the pump controller, and the 9K654/P2002902 General Purpose I/O option B card.

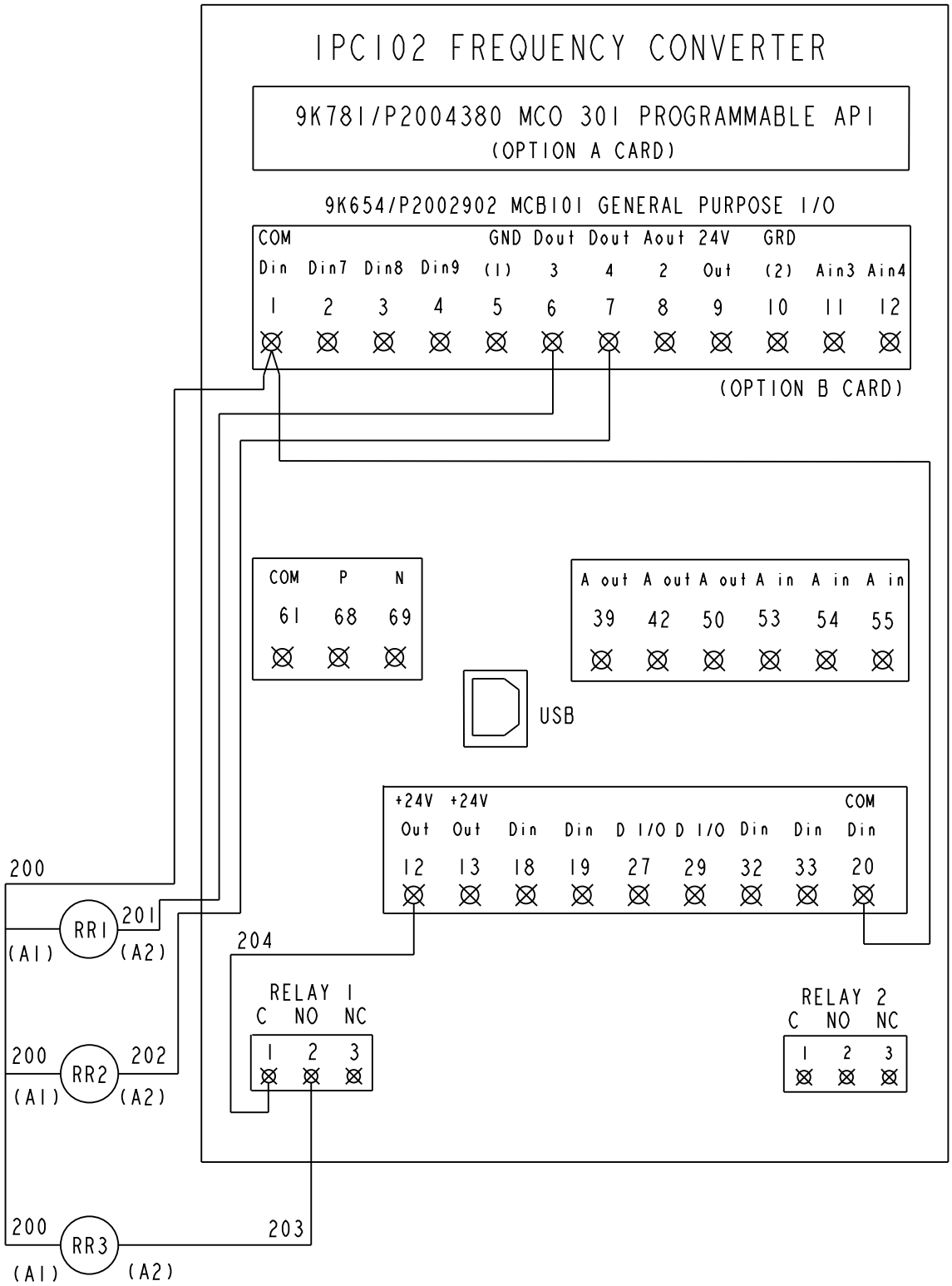

Figure 82: Fixed Speed Follower wiring diagram

6.5.1.2 Fixed Master Synchronous or Fixed Master Multi Control Option A wiring

Daisy chain terminal numbers 62 (RS485-P) and 63 (RS485-N) of the MCO301 Programmable API option card to terminal numbers 68 (+) and 69 (-) of the RS-485 serial communications connectors (see *Control terminal types* on page 62) of the other controllers, respectively.

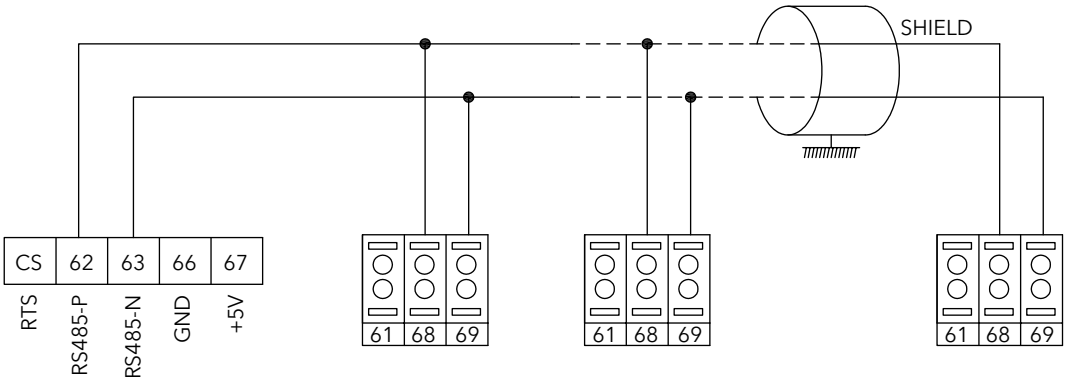

Figure 83: Fixed Master Synchronous or Fixed Master Multi Control option A wiring diagram

6.5.1.3 Multi Master Synchronous or Multi Master Multi Control Option A wiring

Daisy chain the same terminal number 62 (RS485-P) with terminal number 62 (RS485-P), and terminal number 63 (RS485-N) with terminal number 63 (RS485-N) from the first MCO301 Programmable API option card to the last one.

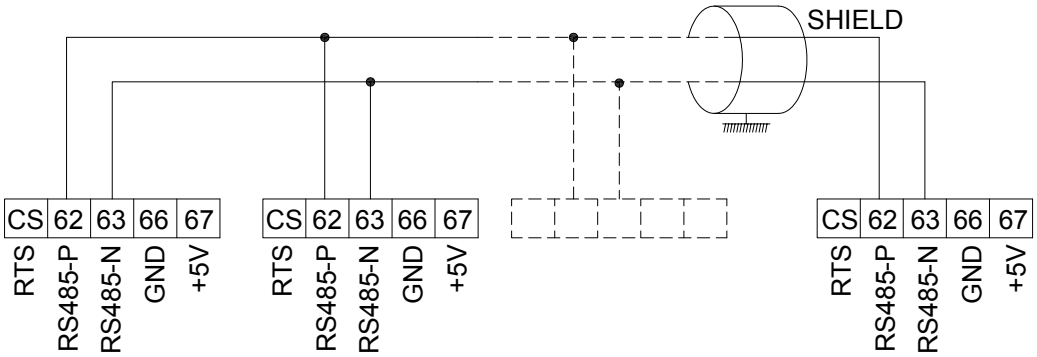

Figure 84: Multi Master Synchronous or Multi Master Multi Control Option A wiring diagram

6.5.2 Option B wiring

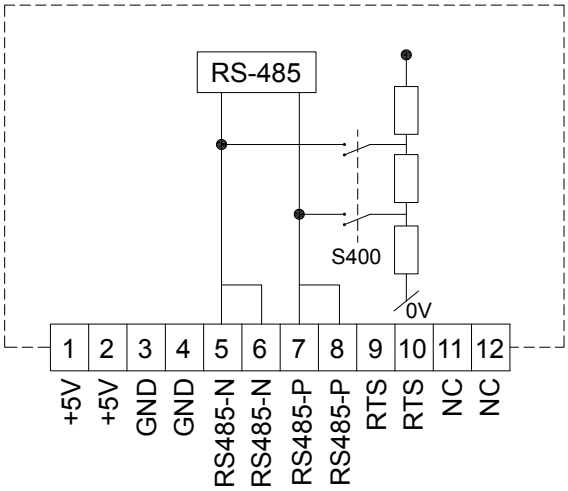

Figure 85: Option B MCO301 Programmable API Termination

NOTE: Two terminals that have the same names are shorted.

6.5.2.1 Fixed Master Synchronous or Fixed Master Multi Control Option B wiring

Daisy chain terminal numbers 5 (RS485-N) and 7 (RS485-P) of the MCO301 Programmable API option card to terminal numbers 69 (-) and 68 (+) of the RS-485 serial communications connectors (see *Control terminal types* on page 62) of the other controllers, respectively.

NOTE: Two pairs of terminal numbers 5 & 6, and 7 & 8 that have the same name are shorted. They can be used separately for a daisy-chain wiring.

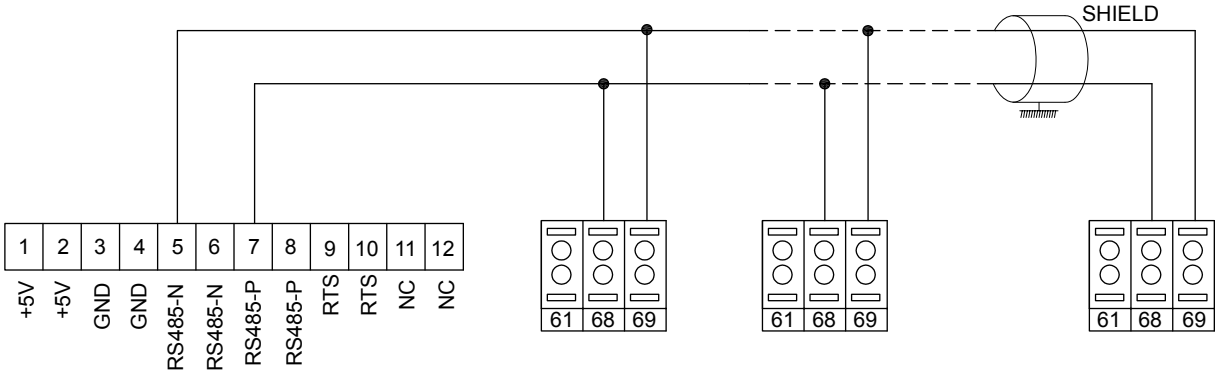

Figure 86: Fixed Master Synchronous or Fixed Master Multi Control Option B wiring diagram

6.5.2.2 Multi Master Synchronous or Multi Master Multi Control Option B wiring

Daisy chain the same terminal number 5 (RS485-N) with terminal number 5 (RS485-N), and terminal number 7 (RS485-P) with terminal number 7 (RS485-P) from the first MCO301 Programmable API option card to the last one.

Two pairs of terminal numbers 5 & 6, and 7 & 8 that have the same name are shorted. They can be used separately for a daisy-chain wiring.

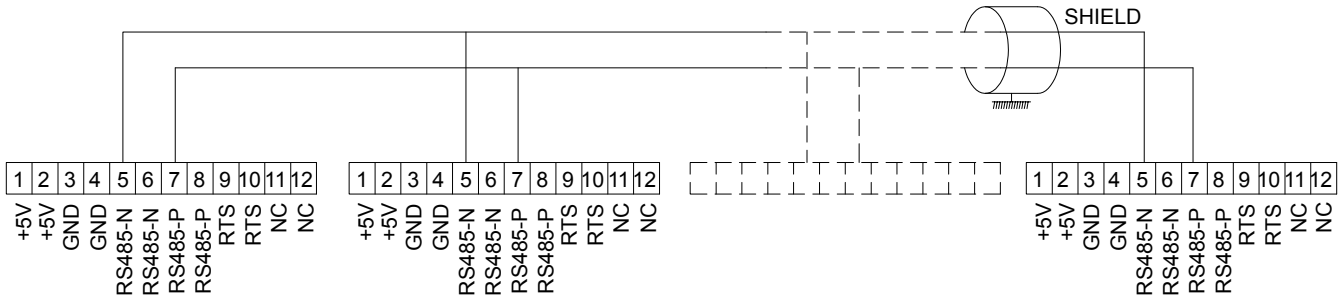

Figure 87: Multi Master Synchronous or Multi Master Multi Control Option B wiring diagram

6.6 Shielding for MCO301 Programmable API

WARNING:

EMC WARNING: Ensure compliance with relevant national and local regulations, for example in protective earth connection.

For installing the communication cables, two different strategies can be followed, Single ground of shield and Multiple ground of shield. Each strategy has both advantages and disadvantages. See the following Single Ground Shielding and Multiple Ground Shielding sections.

6.6.1 Single ground shielding

The single ground shield is specified in the ANSI/ASHRAE 135-1995 standard. The solution benefits by having only one ground connection of the shield, by doing so the possibility for ground loop of equalizing current is heavily reduced. In these systems the

shield of the communication cables has to be isolated from ground at all station, except one. At each station the shield from the two cables has to be connected with each other, and isolated from ground. The best solution for this has been proven to be the use of shrink tubes. The single ground shielding is a good approach where the system uses long communication cables. If two buildings have to be connected over the same communication cable, the use of fiber optic has to be considered. This will prevent that a lightning stroke will be carried from one building to another, and problem with difference in earth potential can be neglected.

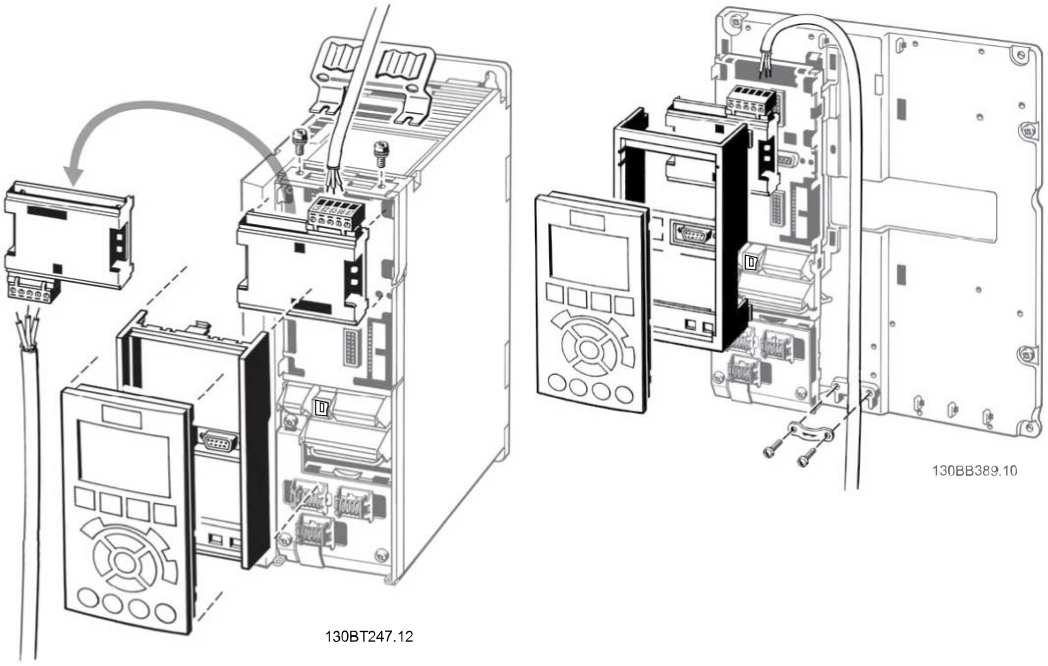

Figure 88: Single ground shielding installation for MCO301 programmable API

6.6.2 Multiple ground shielding

If the distance between the individual drives is limited, connecting the screen to ground at both ends of the bus cable is recommended. This ensures the maximum protection from EMC noise. Connecting the screen at each end requires that each MCO301 Programmable API device has the same earth potential or else an equalizing current flows in the screen of the cable and causes disturbance and poor performance of the system. Low impedance to ground connection of the screen can be achieved by connecting the surface of the screen to ground, by means of a cable clamp or a conductive cable gland. Where this is not possible, the screen can be isolated from the chassis of the drive by use of shrink-tubing. It must be pointed out that the routing of the MCO301 programmable API cable must be established with a maximum distance to other cables such as mains, motor cable, etc.

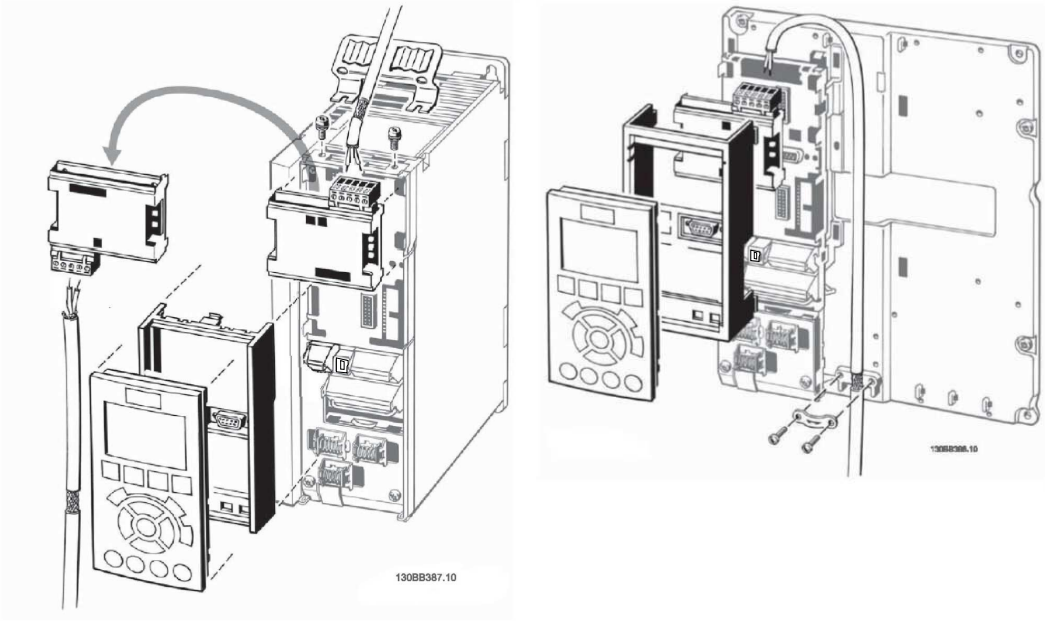

Figure 89: multiple ground shielding installation for MCO301 programmable API

6.7 Troubleshooting the MCO301

1. Identify which drive software (firmware) version is loaded from parameter [15-43] **Software Version**, subgroup [15-4*] Drive Identification. Example shown **Software Version** 5.03.

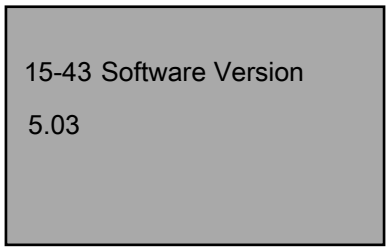

2. Locate the type of option and the location of the MCO301 Programmable API option card (slot A or B) in parameter subgroup [15-6*] **Option Ident**. Select an option and press the OK key. Example shown Option in Slot B and B:A MCO301 Programa... in [15-60] **Option Mounted**.

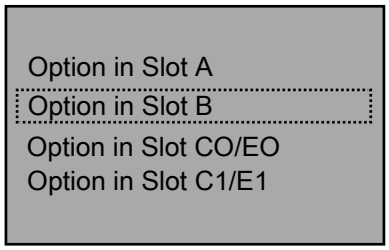

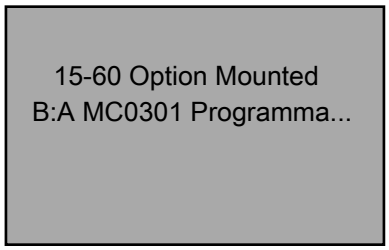

Press Info key for information of mounted option.

Option Mounted:

B:A MC0301
Programmable option

View the installed option type.

3. Find the firmware of the Option card in [15-61] **Option SW Version**. Example shown B:A SW: 03.06.

15-61 Option SW Version

B:A SW: 03.06

4. Find application SW version in [19-99] **Application Version**, parameter group [19-**] Application Parameters. Example shown version 1.66.

19-99 Application Version

1.66

6.8 Group 19 parameter descriptions

NOTE: R is Read only, otherwise Read/Write

Group 19 parameter is not available if the MCO301 Programmable API A/B option card is not installed

Configuration / Status				
ID	Name	Limits	Default	Description
[19–00]	Configuration Mode	[0] External Reference [1] Process Control [2] Test Run	[1]	[0]-Controller changes speed on external reference from PLC/BMS or Analog input, selection in [19-01] is ignored in this mode. [1]-Controller changes speed on feedback source selected in [20-00], make required parameter selection in [19-01]. [2]-Controller in Test Run mode, selection in [19-01] is ignored in this mode.
[19–01]	Multi-pump Control	[0] Disabled [1] Fixed Speed Follower [2] Fixed Master Synchronous [3] Fixed Master Multicontrol [4] Multi Master Synchronous [5] Multi Master Multicontrol	[0]	[0]-Multi-pump control is disabled. [1]-Controller with MCO301 and work as follower. For North America only: [2]-Only one controller with MCO301 work as a master in Synchronous mode of operation For North America only: [3]- Only one controller with MCO301 work as a master in Multicontrol mode of operation [4]-True Multi-Master functionality with MCO301 on all controller in Multicontrol mode of operation [5]-True Multi-Master functionality with MCO301 on all controller in Multicontrol mode of operation

Configuration / Status				
ID	Name	Limits	Default	Description
[19–02]	Appl Alarm Word	32 bit value	R	Application Alarm Word indication
[19–03]	Appl Warning Word	32 bit value	R	Application Warning Word indication
[19–04]	Appl Status Word	32 bit value	R	Application Status Word indication
[19–05]	System Command	0–4	0	0-No Command 1-System Start 2-System Stop 3-Alternate 4-System Reset
[19–06]	Staging Speed [RPM]	0–30,000	R	Indication of Staging Speed in [rpm]
[19–07]	Staging Speed [Hz]	0.0–6500.0	R	Indication of Staging Speed in [Hz]
[19–08]	Destaging Speed [RPM]	0–30,000	R	Indication of Destaging Speed in [rpm]
[19–09]	Destaging Speed [Hz]	0.0–6500.0	R	Indication of Destaging Speed in [Hz]

Application Functions				
ID	Name	Limits	Default	Description
[19–10]	Pump Exercise Idle Time	0–999 hour	0	Pump Exercise Idle Time in hours
[19–11]	Pump Exercise Run Time	0–999 second	0	Pump Exercise Run Time in seconds
[19–12]	Flow Compensation	[0] Disabled [1] Enabled	[0]	Flow compensation Enable/Disable selection
[19–13]	Friction Loss	0.000–999,999.999	0	Total loss of the system at maximum system flow
[19–14]	Friction Loss 1	0.000–999,999.999	0	Friction losses for maximum flow added by pump-1.
[19–15]	Friction Loss 2	0.000–999,999.999	0	Friction losses for maximum flow added by pump-2.
[19–16]	Friction Loss 3	0.000–999,999.999	0	Friction losses for maximum flow added by pump-3.
[19–17]	Friction Loss 4	0.000–999,999.999	0	Friction losses for maximum flow added by pump-4.
[19–18]	Calculated Setpoint	0.000–999,999.999	R	Indicate calculated setpoint.
[19–19]	PID Output [%]	00.0-100.0	R	Indicate PID output in %.

Protection Functions 1				
ID	Name	Limits	Default	Description
[19–20]	No Water Loss of Prime Fault	[0] Disabled [1] Warning [2] Alarm [3] Man.Reset Alarm	3	[0]- No Water / Loss of Prime Fault is disabled. [1]- Controller display “No Water/Loss of Prime” warning, but continue normal operation. [2]- Controller display “No Water/Loss of Prime” alarm [A93] and stop, alarm clear after “No Water/Loss of Prime” condition removed. [3]- Controller display “No Water/Loss of Prime” alarm [A93] and stop. Manual reset required to resume normal operation. Reset can be applied by pressing a reset key on the LCP, through digital input or fieldbus.
[19–21]	No Water Loss of Prime Protection Delay	0–600 Seconds	10	Delay in seconds before controller goes in to No Water/Loss of Prime condition.
[19–22]	No Water Loss of Prime Restart Time	0–999 Minutes	10	Time between each restart attempts in minutes.
[19–23]	No Water Loss of Prime Restart Attempt	0–999	3	Number of attempts made to restart the controller.

Protection Functions 1				
ID	Name	Limits	Default	Description
[19–24]	**No Flow Shutdown**	[0] Disabled [1] Enabled	1	[0]- Sleep Mode and Flow Check functions is disabled. [1]- Sleep Mode and Flow Check functions is enabled, controller enter sleep mode and stop when a No Flow condition is detected.
[19–25]	**No Flow Restart Difference**	0.000–999,999.999	5.000	No Flow Restart Difference sets the pressure drop allowed in absolute units of feedback/setpoint for the pressure (Pset) before canceling the sleep mode.
[19–26]	**High System Fault**	[0] Disabled [1] Warning [2] Alarm [3] Man.Reset Alarm [4] Alarm TripLock	[0]	[0]- High System Cut-out Function is disabled. [1]-Controller display "High System" warning, but continue normal operation. [2]-Controller display "High System" alarm and coast all pumps to stop. System attempts resets as per set in 19-48 & 19-49, then requires manual reset after that. [3]-Controller display "High System" alarm and coast all pumps to stop. Manual reset event require to resume normal operation. Reset can be applied by pressing a reset key on the LCP, through digital input or fieldbus. [4]-Controller display "High System" alarm and coast all pumps to stop. System Power Cycle is required to clear the alarm.
[19–27]	**High System Limit**	0.000–999,999.999	0	System pressure upper threshold value, if feedback pressure goes above this, system generates Alarm/Warning as selected in [19-26] after the delay mentioned in [19-28].
[19–28]	**High System Delay**	0–999 Seconds	0	When System pressure goes above "High System Limit" mentioned in [19-27], Controller wait for this time before asserting Alarm/Warning
[19–29]	**Suction Feedback**	0.000–999,999.999	R	Indicates **Suction Feedback**.

Protection Functions 2				
ID	Name	Limits	Default	Description
[19–30]	**Suction Input**	[0] Not Set [1] Analog input 53 [2] Analog input 54 [7] Analog input X30/11 [8] Analog input X30/12 [9] Analog input X42/1 [10] Analog input X42/3 [11] Analog input X42/5 [100] Bus Feedback 1 [101] Bus Feedback 2 [102] Bus Feedback 3	[0]	Select the available source of suction input, this is applicable to master drive only.
[19–31]	**Cascade Pump Status**	32 bit Value	R	Cascade Pump Status Word indication. See Note #1 for [19-31] **Cascade Pump Status** below this 19 parameter group table.

Protection Functions 2				
ID	Name	Limits	Default	Description
[19–32]	Low Suction Fault	[0] Disabled [1] Warning [2] Alarm [3] Man.Reset Alarm	[0]	[0]- Low Suction Fault is disabled. [1]-Controller display "Low Suction" warning, but continue normal operation. [2]-Controller display "Low Suction" alarm and coast all pumps to stop, alarm clears after "Low Suction" condition removed [3]-Controller display "Low Suction" alarm and coast all pumps to stop. Manual reset event require to resume normal operation. Reset can be applied by pressing a reset key on the LCP, through digital input or fieldbus.
[19–33]	Low Suction Cut-out	0.000–999,999.999	0	Suction pressure lower/cut-out threshold value, if suction pressure goes below this value, system generates Alarm/ Warning as selected in [19-32] after the delay mentioned in [19-34].
[19–34]	Low Suction Delay	0–999 Seconds	0	When Suction pressure goes below "Low Suction Cut-out" mentioned in [19-33], Controller wait for this time before asserting Alarm/Warning
[19–35]	Low Suction Restart Limit	0.000–999,999.999	0	Controller comes out of "Low Suction" condition when feedback value rises above "Low Suction Restart"
[19–36]	High Suction Fault	[0] Disabled [1] Warning [2] Alarm [3] Man.Reset Alarm	[0]	[0]- High Suction Fault is disabled. [1]-Controller display "High Suction" warning, but continue normal operation. [2]-Controller display "High Suction" alarm and coast all pumps to stop, alarm clears after "High Suction" condition removed [3]-Controller display "High Suction" alarm and coast all pumps to stop. Manual reset event require to resume normal operation. Reset can be applied by pressing a reset key on the LCP, through digital input or fieldbus.
[19–37]	High Suction Cut-out	0.000–999,999.999	0	Suction pressure higher threshold value, if suction pressure goes above this value, system generates Alarm/Warning as selected in [19-36] after the delay mentioned in [19-38].
[19–38]	High Suction Delay	0–999 Seconds	0	When Suction pressure goes above "High Suction Fault" mentioned in [19-37], controller waits for this time before asserting Alarm/Warning
[19–39]	High Suction Restart Limit	0.000–999,999.999	0	Controller comes out of "High Suction" condition when feedback value goes below "High Suction Restart Limit"

Protection Functions 3				
ID	Name	Limits	Default	Description
[19–40]	**All Zones Failure Function**	[0] Off [2] Stop [3] Constant Speed [4] Stop and Trip	2	[0]– All Zone Failure monitoring is disabled. [2]– The controller stops all pumps in the system. The "All Zone Failure" warning displays on LCP. Controller resumes normal operation when any of the zone sensors recovers. [3]– The controller runs a number of pumps defined by [19-42] **All Zones Failure Number of Pumps** at the speed defined by parameters [19-42] **All Zones Failure Speed [RPM]** or [19-43] **All Zones Failure Speed [Hz]**. The "All Zone Failure" warning displays on LCP. Controller resumes normal operation when any of the zone sensors recovers. [4]– The controller stop all pumps in the system. The "All Zone Failure" alarm display on LCP. Manual Reset event required to resume normal operation. Reset can be applied by pressing a reset key on the LCP, through digital input or fieldbus.
[19–41]	**All Zones Failure Number of Pumps**	1–4	1	All zone failure occurs when all pressure feedback signals are lost (i.e. drop below 2 mA). During this condition, a predefined number of pumps runs at a predefined speed. This parameter sets the number of pumps and [19-42] or [19-43] determines the speed.
[19–42]	**All Zones Failure Speed [RPM]**	0 - 30,000 RPM	0	All zone failure speed in rpm
[19–43]	**All Zones Failure Speed [Hz]**	0.0 - 6500.0 Hz	0	All zone failure speed in Hz
[19–44]	**Zone Status**	32 bit value	R	Indicate zone status word. See Note #2 for [19-44] **Zone Status** below this 19 parameter group table.
[19–45]	**Low System Fault**	[0] Disabled [1] Warning [2] Alarm [3] Man.Reset Alarm [4] Alarm TripLock	[0]	[0]- Low System Fault is disabled. [1]-Controller display "Low System" warning, but continue normal operation. [2]-Controller display "Low System" alarm and coast all pumps to stop. System attempts resets as per set in [19-48] & [19-49], then requires manual reset after that. [3]-Controller display "Low System" alarm and coast all pumps to stop. Manual reset event require to resume normal operation. Reset can be applied by pressing a reset key on the LCP, via digital input or fieldbus. [4]-Controller display "Low System" alarm and coast all pumps to stop. System Power Cycle is required to clear the alarm.
[19–46]	**Low System Limit**	0.000–999,999.999	0	System pressure lower threshold value, if feedback pressure goes below this, system generates Alarm/ Warning as selected in [19-45] after the delay mentioned in [19-47].
[19–47]	**Low System Delay**	0–999 Seconds	0	When System pressure goes below "Low System Cut-out Threshold" mentioned in [19-46], Controller wait for this time before asserting Alarm/Warning
[19–48]	**System Restart Time**	0–999 seconds	0	Time between each restart attempts in seconds, applicable to "Low System Cut-out Function", "High System Cut-out Function" and "Underpressure".
[19–49]	**System Restart Attempts**	1–5	1	Number of attempts made to restart the controller, applicable to **Low System Fault**, "High System Fault" and "Underpressure"

Multi-Pump Functions				
ID	Name	Limits	Default	Description
[19–50]	**Number of Pumps**	2–4	2	Total number of pumps in the system
[19–51]	**Standby Pumps**	0–2	0	Total number of standby pumps in the system
[19–52]	**Alternation Function**	[0] Disabled [1] On Run Time [2] On Clock Time	2	[0]- Automatic alternation is disabled. [1]- The lead pump functionality transferred to the next available pump by pump's address [2]- The lead pump functionality transferred to the pump with the least running hours
[19–53]	**Alternation Time Interval**	0–999 hours	24	This determines the number of hours of pump operation before pump alternation occurs. When the pumps are manually alternated using the right or left arrow keys on the Local Control Panel, this timer is reset.
[19–54]	**Pump Status**	32 bit value	R	Pump status of Advance pump controller. See the Note #3 for [19-54] **Pump Status** below this 19 parameter group table.
[19–55]	**Lead Pump**	1–4	R	Indicate current lead pump number used by the controller for sequential staging and destaging in Multi-Master/ Fixed-Master configuration.
[19–56]	**Pump Address**	1–4	1	Pump address in Multi-Master/Fixed-Master configuration, it must be unique for all controller in system.
[19–57]	**Timed Destage**	0–999 Minutes	0	Destage time in minutes, this parameter Allows to destage pumps when PV destaging fails to detect drop in the demand
[19–58]	**Bypass Drives Fail**	0–4	0	When the total number of controllers fail because of non-pump related alarms, rises to or above the number defined by this parameter, Bypass operation starts
[19–59]	**Bypass Run Pumps**	0–4	0	When Bypass Operation is started, application put the number of controllers into bypass mode as defined by par this parameter or the maximum number available, whichever is less

PV Staging				
ID	Name	Limits	Default	Description
[19–60]	**Stage Speed**	0–100 %	95	When controller reaches this percentage of maximum speed, the controller start a timer, set in [19-61]. After this timer expires, the controller stage on another pump.
[19–61]	**Stage Proof Time**	0–999 Seconds	30	After controller reaches the speed percentage set in [19-60], this timer starts. After this timer expires the controller stage on next available pump in system
[19–62]	**Stabilization Time**	0–999 Seconds	60	After a pump has been staged on, the speed that the system reaches after this timer expires is used to calculate the de-stage speed.
[19–63]	**Destage Percentage**	0–100 %	80	After Controller staged on, the controller waits until the stage stabilization proof timer expires. It then calculates the de-stage speed by multiplying the pump speed by the value in this parameter. The controller de-stages a pump when the system speed reaches this value.
[19–64]	**Destage Proof Time**	0–999 Seconds	30	After the controller drops speed below the calculated destaging speed set at [19- 08] (RPM) or [19-09] (Hz), the timer starts. After the timer expires the controller destages the last pump in the system.

PV Staging				
ID	Name	Limits	Default	Description
[19–65]	**Analog Output 42 Function**	[0] Control feedback [1] System speed [2] System power [3] System frequency	[0]	Select Analog Output AO42 output function
[19–66]	**Forced Destage Speed**	0–100 %	50	Force destage threshold in percentage of maximum speed, system force destage the running and available pump in system.
[19–67]	**Forced Destage Proof Time**	0–999 Seconds	30	Force destage time in seconds, this parameter allows to force destage the pumps.
[19–68]	**Relay 1 Function**	[0] Sys alarm/warning [1] System Pump alarm [2] System VFD alarm [3] System Running [4] Sensor Fault [5] Suction alarm [6] Discharge alarm [7] Sleep mode [8] System Bypass [9] All Zone Failure	[0]	Allocation of Advanced specific functions to Relay-1, this function represents system status, this function works with master drive.
[19–69]	**Relay 2 Function**	[0] Sys alarm/warning [1] System Pump alarm [2] System VFD alarm [3] System Running [4] Sensor Fault [5] Suction alarm [6] Discharge alarm [7] Sleep mode [8] System Bypass [9] All Zone Failure	[0]	Allocation of Advanced specific functions to Relay-2, this function represents system status, this function works with master drive.

EOC Staging				
ID	Name	Limits	Default	Description
[19–70]	**Flow Feedback Input**	[0] Not Set [1] Analog input 53 [2] Analog input 54 [7] Analog input X30/11 [8] Analog input X30/12 [9] Analog input X42/1 [10] Analog input X42/3 [11] Analog input X42/5 [100] Bus Feedback 1 [101] Bus Feedback 2 [102] Bus Feedback 3	[0]	Select the system flow feedback input, this is applicable to master drive only, flow input is required for EOC and flow based stage/destage function.
[19–71]	**Flow Feedback**	0.000–999,999.999	R	Indicates the flow feedback in absolute value
[19–72]	**EOC Staging Function**	[0] Disabled [1] Enabled	[0]	[0]-End of curve based stage/destage function enable [1]- End of curve based stage/destage function disable

EOC Staging				
ID	Name	Limits	Default	Description
[19–73]	**Max.Pump Flow**	0.000–999,999.999		This is used to initiate end-of-curve staging on of an additional pump. This represents the maximum flow per pump at the end of the pump curve.
[19–74]	**EOC Stage Percentage**	0–100 %	80	This represents the percentage of [19-73] **Max.Pump Flow**, when the flow per pump is greater than this value times the pump speed in percent, the controller begin to stage on an additional pump.
[19–75]	**EOC Stage Proof Time**	0–999 Seconds	30	After the feedback signal from the flow meter indicates that the flow per pump is greater than the expected flow, this timer starts. The expected flow is calculated by the product of the maximum flow from the pump times the percent of output speed If the condition continues until the timer expires, an additional pump staged on.
[19–76]	**EOC Destage Percentage**	0–100 %	45	This represents the percentage of [19-73] **Max.Pump Flow**, when the flow per pump is less than this value times the pump speed in percent, the controller destage a pump
[19–77]	**EOC Destage Proof Time**	0–999 Seconds	30	After the controller calculates that end of curve destaging is required, this timer starts. If the condition continues until the timer expires, a pump destage
[19–78]	**Flow Destage Value**	0.000–999,999.999	0	If the flow per pump measured by the flow meter is less than this value, the controller initiate the process of destaging a pump, regardless of the pressure feedback.
[19–79]	**Flow Destage Proof Time**	0–999 Seconds	0	When the controller initiates a flow destage, this timer start. If the condition continues until the timer expires a pump destage.

Appl Closed Loop				
ID	Name	Limits	Default	Description
[19–80]	**Feedback 4 Source**	[0] No Function [1] Analog input 53 [2] Analog input 54 [7] Analog input X30/11 [8] Analog input X30/12 [9] Analog input X42/1 [10] Analog input X42/3 [11] Analog input X42/5 [100] Bus Feedback 1 [101] Bus Feedback 2 [102] Bus Feedback 3	[0]	Select the feedback-4 input, this is applicable to master drive only, any unused feedback must be set to "No Function" in Feedback Source parameters by the user.
[19–81]	**Feedback 4**	0.000–999,999.999	R	Indicates **Feedback 4** value in absolute unit.
[19–82]	**Control Feedback**	0.000–999,999.1000	R	Indicates feedback value currently controlling the system in absolute unit
[19–83]	**Setpoint 4**	0.000–999,999.999	0	**Setpoint 4** value in absolute unit, system consider value in this parameter based on selection in [20-20] – **Feedback Function**.
[19–84]	**Alternate Setpoint 1**	0.000–999,999.999	0	**Alternate Setpoint 1** value, switch between alternate setpoint by applying signal on digital input-33, require to set [5-15] DI-33 to [75] MCO Specific
[19–85]	**Alternate Setpoint 2**	0.000–999,999.999	0	**Alternate Setpoint 2** value, switch between alternate setpoint by applying signal on digital input-33, require to set [5-15] DI-33 to [75] MCO Specific

Appl Closed Loop				
ID	Name	Limits	Default	Description
[19–86]	**Alternate Setpoint 3**	0.000–999,999.999	0	**Alternate Setpoint 3** value, switch between alternate setpoint by applying signal on digital input-33, require to set [5-15] DI-33 to [75] MCO Specific
[19–87]	**Alternate Setpoint 4**	0.000–999,999.999	0	**Alternate Setpoint 4** value, switch between alternate setpoint by applying signal on digital input-33, require to set [5-15] DI-33 to [75] MCO Specific
[19–88]	**Control Zone**	1–4	R	Indicates control zone of system
[19–89]	**Control Setpoint**	0.000–999,999.999	R	Indicates control setpoint of system
[19–90]	**Pipe Fill Function**	[0] Disabled [1] Enabled	[0]	[0]- Disabled [1]- Enabled, **Pipe Fill Function** run only once when controller is powered up (application is initialized) and started (is put into "Auto On" mode and is permitted to run)
[19–91]	**Triggered Pressure**	0.000–999,999.999	0	**Pipe Fill Function** achieve this pressure before it pass control to system PID
[19–92]	**Speed Step**	0.0–100.0 %	0	**Pipe Fill Function** increase the system speed by this percentage of maximum speed.
[19–93]	**Steady Time**	0.000–999,999.999 Secs	0	**Steady Time** defines the time for which system pressure must remain stable within dead band defined by [19-94].
[19–94]	**Dead Band**	0.000–999,999.999	0	System pressure must remain within this band for time specified in [19-93] before **Pipe Fill Function** increase speed by step size
[19–95]	**Pipe Fill Max Pump**	0–4	0	Maximum number of pumps can be staged in **Pipe Fill Function**.
[19–96]	**System Speed [Hz]**	0.0–6500.0 Hz	R	Indicates system speed in Hz
[19–97]	**Priming Delay**	0–999 Seconds	0	Ensure proper system priming before protection is enabled. When controller is powered it starts the priming proof timer defined by this parameter
[19–98]	**System kW**	0–2147483647 kW	R	Indicates system power in kW.
[19–99]	**Application Version**	0-999.99	R	**Application Version** number, indicates the application software version installed in system.

Note #1 for [19-31] **Cascade Pump Status**:

- Cascade Pump Status will be updated only when system operates in Fixed Speed Follower Mode, Cascade Status is 32-bit hexadecimal value with pump at index 1 data at MSB and pump at index 4 data at LSB, where only one pump runs on variable speed and other will run at fixed speed.

Bit	Description
00 - 07	Status of Fixed Speed Pump 3
08 - 15	Status of Fixed Speed Pump 2
16 - 23	Status of Fixed Speed Pump 1
24 - 31	Status of Variable Speed Pump

- Pump status of Variable Speed remains as per [19-54] **Pump Status** and the following table shows status for each of three fixed speed Pump designations:

Bit	Bit = 0	Bit = 1
0	Pump is not Running	Pump Running
1	Pump is not Fail (Default)	Pump Fail
2	Not a Lead Pump	Lead Pump

Note #2 for [19-44] Zone Status:

Zone Status is 32-bit hexadecimal value with one hexadecimal digit per zone with first zone at the most significant position to be read left to right:

Hexadecimal Digit	Description
0	Indicates inactive zone that has not being set up.
1	Sensor Fault of Active Zone
5	Displayed across all zones indicates Open Loop or Test Run Configuration Mode
A	Indicates Active zone that is set up and functioning properly
D	Feedback Defined / Inactive Zone

Note #3 for [19-54] Pump Status:

Pump Status is a binary value with eight bits allocated per pump, with pump at index 1 data at MSB and pump at index 4 data at LSB. The following table shows status designations:

Bit	Name	Bit = 0	Bit = 1
0	Ready	Drive is not available or powered by 24V supply	Drive is ready to run pump
1	Auto	Drive is in "Hands On" or "Off" mode	Drive is in "Auto On" mode and is part of the system
2	Running	Motor is not running	Motor is running
3	Drive Alarm	No Alarm	Drive is stopped due to drive related alarm
4	Pump Alarm	No Alarm	Drive is stopped due to pump related alarm
5	Bypass	Pump is operated on drive	Pump is operated on Bypass
6	Overload	No Alarm	Overload Failure
7	Enabled	Not Enabled / Stand By	Enabled

7 Operation

7.1 Pre-start procedure

Electrical Hazard:

If input and output connections have been connected improperly, there is potential for high voltage on these terminals. If power leads for multiple motors are improperly run in same conduit, there is potential for leakage current to charge capacitors within the frequency converter, even when disconnected from mains input. For initial start up, make no assumptions about power components. Follow pre-start procedures. Failure to follow pre-start procedures could result in personal injury or damage to equipment.

1. Make sure the input power to unit is OFF and locked out per OSHA requirements for North America or local regulation for International. Do not rely on panel disconnect switches.
2.

Condition	Action
Single-phase drive	Use an AC voltmeter to verify that there is no voltage on input terminals L1 and L2, and from these terminals to ground, and output terminals T1, T2, and T3, phase-to-phase, and phase to ground for one phase power supply.
Three-phase drive	Use an AC voltmeter to verify that there is no voltage on input terminals L1, L2, and L3, phase-to-phase and phase-to-ground and output terminals T1, T2, and T3, phase-to-phase, and phase-to-ground for three phase power supply.

3. Use an ohmmeter to confirm continuity of the motor by measuring T1–T2, T2–T3, and T3–T1.
4.

Condition	Action
Single-phase drive	Use an ohmmeter to confirm open on input by measuring L1 and L2 for one phase power supply.
Three-phase drive	Use an ohmmeter to confirm open on input by measuring L1–L2, L2–L3, and L3–L1 for three phase power supply.

   If an isolation transformer is between the power source and panel, continuity will be present. In this case, visually confirm that motor and power leads are not reversed.
5. Inspect the controller for loose connections on terminals.
6. Check for proper ground: controller to main building distribution ground, and to motor ground.
7. Confirm control connections are terminated per connection diagrams that are supplied with the equipment.
8. Check for external devices between drive and motor.

   It is recommended that no devices be installed between the motor and drive.
9. Record motor nameplate data; power, voltage, full load amps (FLA), and RPM. Ensure the nameplate data matches the drive ratings.
10. Confirm that incoming power matches drive label voltage and motor nameplate voltage.
11. For multiple winding motors, motors must be wired on run winding Delta, not Y-start winding.

CAUTION:

EQUIPMENT DAMAGE. If motor FLA (full load amperage) is greater than unit maximum amps, controller must be replaced with one of appropriate ratings. Do not attempt to run the unit. Failure to match FLA to the unit maximum amp rating may result in equipment damage.

12. Confirm that the motor FLA is equal to or less than the maximum controller output current. Some motors have higher than normal NEMA (North America) / rating (International) currents.

7.2 Pre-startup inspections

Item to Inspect	Description	Checked
Auxiliary equipment	• Look for auxiliary equipment, switches, disconnects, or input fuses/circuit breakers that may reside on input power side of the frequency converter or output side to motor. Ensure they are ready for full speed operation. • Check function and installation of any sensors used for feedback to the frequency converter. • Remove power factor correction caps on motor(s), if present.	
Cable routing	• Ensure that input power, motor wiring and control wiring are separated or in three separate metallic conduits for high frequency noise isolation.	
Control wiring	• Check for broken or damaged wires and connections. • Check that control wiring is isolated from power and motor wiring for noise immunity. • Check the voltage source of the signals, if necessary. • The use of shielded cable or twisted pair is recommended. Ensure that the shield is terminated correctly.	
Cooling clearance	• Measure that top and bottom clearance is adequate to ensure proper air flow for cooling.	
EMC considerations	• Check for proper installation with regard to electromagnetic capability.	
Environmental conditions	• See equipment tech label for the maximum ambient operation temperature limits. • Humidity levels must be 5–95% non-condensing.	
Fusing and circuit breakers	• Check for proper fusing or circuit breakers. • Check that all fuses are inserted firmly and in operational condition and that all circuit breakers are in the open position.	
Grounding (earthing)	• The unit requires an earth wire (ground wire) from its chassis to the building ground (earth) . • Check for good earth connections (ground connections) that are tight and free of oxidation. • grounding (earthing) to conduit or mounting the back panel to a metal surface is not a suitable ground (earth) .	
Input and output power wiring	• Check for loose connections. • Check that motor and mains are in separate conduit or separated screened cables.	
Panel interior	• Inspect that the unit interior is free of dirt, metal chips, moisture, and corrosion.	
Switches	• Ensure that all switch and disconnect settings are in the proper positions.	
Vibration	• Check that the unit is mounted solidly or that shock mounts are used, as necessary. • Check for an unusual amount of vibration.	

Checked by:

Date:

7.3 Start-up procedure

WARNING:

EQUIPMENT HAZARD. The drive contains dangerous voltages when connected to line voltage. See section 1.2.3 *Safety precautions* on page 6 for details of the safety precaution for Equipment Hazard.

WARNING:

- HIGH VOLTAGE. See section 1.2.3 *Safety precautions* on page 6 for details of the safety precaution for High Voltage.
- DISCHARGE TIME. See section 1.2.3 *Safety precautions* on page 6 for details of the safety precaution for Discharge Time.
- LEAKAGE CURRENT. See section 1.2.3 *Safety precautions* on page 6 for details of the safety precaution for Leakage Current Hazard.
- UNINTENDED START. See section 1.2.3 *Safety precautions* on page 6 for details of the safety precaution of Unintended Start.
- INTERNAL FAILURE HAZARD. Refer to section 1.2.3 *Safety precautions* on page 6 for details of the safety precaution for Internal Failure Hazard.
- WINDMILLING. See section 1.2.3 *Safety precautions* on page 6 for details of the safety precaution for Windmilling.

1. Perform pre-start procedure.
2. Ensure that all operator devices are in the OFF position.
3. Keep the built-in disconnect switch in the OFF position. Apply voltage to the unit. DO NOT operate drive now.
4.

Condition	Action
Single-phase drive	Not applicable
Three-phase drive	Confirm input line voltage is balanced within 3% for three phase drive. If it is not, correct input voltage imbalance before proceeding. Repeat this procedure after voltage correction, when applicable.

5. Confirm that the wiring matches the installation diagram that is supplied with the unit.
6. Ensure control wiring matches the installation application.
7. Turn the built-in disconnect to the ON position.

7.4 Programming the controller

CAUTION:

See section 1.2.3 *Safety precautions* on page 6 for details of the safety precaution before using the Genie.

The following CAUTION screen is displayed after a reinitialization or after selecting Q4 Start-Up Genie (North America regional setting) or Q4 Smart Start (International regional setting).

CAUTION: Before proceeding, set DI 18 to Stop (terminal 18 open) to prevent the unit from starting the motor.
[OK]

The controller can be programmed by using either the Start-Up Genie for the North America regional setting or Smart Setup for International regional setting, Quick Menus mode or the Main Menu mode. The Main Menu mode allows access to all parameters. To modify a parameter or make a selection in the Start-Up Genie (Smart Setup), enter the Quick Menus mode or the Main Menu mode by following the procedure below:

- To enter the Quick Menus mode, press [Quick Menu]

```
Quick Menus
01 My Personal Menu
02 Quick Setup
03 Function Setups
04 Start-Up Genie
```

- To enter the Main Menu mode, press [Main Menu]

```
Main Menu
0-** Operation/Display
1-**  Load and Motor
2-**  Brakes
3-**  Reference and Ramps
```

- The Start-Up Genie (Smart Setup) will begin automatically after the first power up or it can be rerun by selecting Start-Up Genie for the North America regional setting or Smart Start for the International regional setting under *Quick Menus*.
- Select the desired selection in the Start-Up Genie (Smart Setup) or parameter group in *Main Menu* by using the up and down arrows.
- Press [OK] to enter the sub-menu or selected parameter group.
- Once in the sub-menu or parameter group, use the up and down arrows to highlight the desired parameter. Press [OK] to select the parameter and enable editing.
- To edit the parameter use the up and down arrows to scroll through the parameter settings or selections. For numeric values with more than one digit, use the left and right keys to select the position within the number. The highlighted area can be modified by using the up and down arrows.
- Press [OK] to accept and save or [Cancel] to disregard the change.

Array parameters allow the modification of a group of parameters through one parameter address. An example of an array parameter is [5-40] **Function Relay**. This parameter allows configuration of the 2 programmable relays included with the controller. To modify an array parameter follow the procedure below:

- Enter the Main Menu as previously described.
- Use the up and down arrows to scroll to [5-**] **Digital In/Out**. Press [OK] to enter the parameter group.
- Use the up and down arrows to scroll to [5-4*] **Relays**. Press [OK] to enter the parameter sub-group. The screen is shown below.

```
Relay 1
Relay 2
```

```
5-40 Function Relay
160  No alarm
```

  - To edit Relay 1, use the up and down arrows to highlight Relay 1 and press [OK] to select Relay 1.
  - Press [OK] again to enable editing of Relay 1.
  - Use the up and down arrows to select the desired relay function.
  - Press [OK] to save the selection.
  - Use the up and down arrows to select the [5-41] **On Delay, Relay** or [5-42] **Off Delay, Relay**. Repeat the steps above to edit these parameters.
  - Press [BACK] to return to the Relays screen and repeat the above steps to edit the function for Relay 2.
  - Press [Main Menu] to return to the Main Menu.

7.4.1 Quick Menus

The Quick Menus mode contains various sub-menus that allow quick and easy access to common parameters. There are 6 sub-menus under Quick Menus. The 6 sub-menus are shown in the table below.

Table 22: Quick Menus

Sub-menu	Sub-menu Group Name	Description
Q1	My Personal Menu	Contains parameters commonly used to configure pump applications.
Q2	Quick Setup	Contains parameters commonly used to configure the controller.
Q3	Function Setups	Provides quick access to parameters commonly required for HVAC applications.
Q4	Start-Up Genie (North America) Smart Start (International)	Guides the user to configure the controller for various applications.
Q5	Changes Made	Shows the last 10 changed parameters, changes since factory defaults and input assignments.
Q6	Loggings	Displays graph line readouts of the LCP parameters. To change displayed LCP parameters use parameters 0–20 to 0–24.

7.4.2 My Personal Menu

My Personal Menu (Q1) has been configured at the factory to contain 20 parameters commonly used in pumping applications. Use My Personal Menu to change parameters while the system is running, such as changing Setpoint.

NOTE: Per the factory default setting, the active setup is Setup 1 for all applications. The parameters found in My Personal Menu are shown below.

7.4.2.1 My personal menu – North America parameters

Parameter number	Parameter Name	Default Value	Parameter Description
[20-21]	**Setpoint 1**	• Booster: 50 [Unit] • HVAC: 15 [Unit]	Process **Setpoint 1**. The controller will adjust speed to maintain this value.
[20-00]	**Feedback 1 Source**	Analog Input 53	Feedback source for the PID controller, transducer input source. Note: DIP switch 54: set to I (right position) for current input type or set to U (left position) for voltage input type.
[20-12]	**Reference/Feedback Unit**	• Pressure Control: psi • Flow Control: GPM • Level Control: ft	Unit used for the Feedback Source, prior to applying the feedback conversion.
[22-20]	**Low Power Auto Set-up**	Off	Start of auto set-up of power data for no-flow power tuning.

Parameter number	Parameter Name	Default Value	Parameter Description
[20-84]	**On Reference Bandwidth**	0%	When the difference between the feedback and the setpoint reference is less than the value of this parameter, the drive will run on Ramp 2.
[3-41]	**Ramp 1 Ramp Up Time**	10.0 s	Ramp up time (0 to full speed). Increasing this time will produce a lower ramp up.
[3-42]	**Ramp 1 Ramp Down Time**	5.0 s	Ramp down time (full speed to 0). Increasing this time will produce a slower ramp down.
[20-93]	**PID Proportional Gain**	5.0	Proportional correction gain for PID controller. Increasing this value will produce a faster system response. CAUTION: Increasing this value too high can make the system unstable and produce severe oscillations.
[20-94]	**PID Integral Time**	3.3 s	Integration time for the PID controller. Increasing this value will produce a slower system response. CAUTION: Decreasing this value too low can make the system unstable and produce severe oscillations.
[19-12]	**Flow Compensation**	Disabled	This parameter is used for enabling or disabling the flow-compensated setpoint operation.
[19-60]	**Stage Speed**	95%	When a variable speed pump reaches this percentage of maximum speed, the controller will start a timer, set in [19-61]. After this timer expires, the controller will stage on another available pump.
[19-63]	**Destage Percentage**	80%	After a pump is staged on, the controller waits until the stage stabilization proof timer expires. It then calculates the de-stage speed by multiplying the pump speed by the value in this parameter. The controller will de-stage a pump when the system speed stays below this value for de-stage proof time.

Parameter number	Parameter Name	Default Value	Parameter Description
[19-56]	**Pump Address**	1	Pump address in Multi-Master configuration. It must be unique for all controllers in the system.
[19-01]	**Multi-pump Control**	Multi Master Multicontrol	This parameter configures the Multi-pump Control mode until a different option other than Disabled is selected for Single Pump.
[19–20]	**No Water Loss of Prime Fault**	Alarm	This parameter configures the **No Water Loss of Prime Fault**.
[22-39]	**No Water/Loss of Prime Limit [HP]**	0	Set power consumption at 85% speed level. This parameter is used for storing values needed to tune no-flow detection.
[22-50]	**Under Pressure Function** (North America) / **End of Curve Function** (International)	Off	This parameter configures the **Under Pressure Function**. The Under Pressure Alarm/Warning is issued when the system pressure falls below the [22-52] **End of Curve Tolerance** for longer than the [22-51] **Under Pressure Delay Time** (North America) / **End of Curve Delay** (International).
[22–51]	**Under Pressure Delay Time**)North America) / **End of Curve Delay** (International).	30 s	This parameter specifies the time between detection of an Under Pressure event and when the action defined in **Under Pressure Function** is issued.
[22–52]	**End of Curve Tolerance**	20%	This parameter is used to select desired tolerance for the end of curve function.
[19–25]	**No Flow Restart Difference**	10.0	This parameter sets the pressure drop allowed in absolute units of feedback/ setpoint for the pressure (Pset) before canceling the sleep mode.

7.4.2.2 My personal menu – International parameters

Parameter number	Parameter name	Default value	Description
[20–21]	**Setpoint 1**	Booster: 3.5 [Unit] HVAC: 1 [Unit]	Process Setpoint 1. The controller will adjust speed to maintain this value. If multiple setpoints are enabled, this parameter will display and allow adjustment of the active setpoint.

Parameter number	Parameter name	Default value	Description
[19–18]	Calculated Setpoint	Booster: 3.5 [Unit] HVAC: 1 [Unit]	This parameter indicates a calculated setpoint.
[19–25]	No Flow Restart Difference	0.2	This parameter sets the pressure drop allowed in absolute units of feedback/ setpoint for the pressure (Pset) before canceling the sleep mode.
[19–12]	Flow Compensation	Disabled	This parameter is used for enabling or disabling the flow-compensated setpoint operation.
[19–13]	Friction Loss	0	This parameter calculates the total loss of the system at the maximum system flow.
[20–84]	On Reference Bandwidth	20%	The On Reference Bandwidth is calculated as a percentage of the setpoint reference. When the difference between the feedback and the setpoint reference is less than the value of this parameter, drive will run on Ramp 2.
[3–41]	Ramp 1 Ramp Up Time	4s	Ramp up time (0 to full speed). Increasing this time will produce a slower ramp up.
[3–42]	Ramp 1 Ramp Down Time	4s	Ramp down time (full speed to 0). Increasing this time will produce a slower ramp down.
[3–51]	Ramp 2 Ramp Up Time	70s	Ramp up time (0 to full speed). Increasing this time will produce a slower ramp up.
[3–52]	Ramp 2 Ramp Down Time	70s	Ramp down time (full speed to 0). Increasing this time will produce a slower ramp down.
[19–60]	Stage Speed	95%	When the controller reaches this percentage of maximum speed, the controller starts a timer set in [19-61]. After this timer expires, the controller will stage on another pump.

Parameter number	Parameter name	Default value	Description
[19–63]	**Destage Percentage**	40%	After a pump is staged on, the controller waits until the stage stabilization proof timer expires. It then calculates the de-stage speed by multiplying the pump speed by the value in this parameter. The controller will de-stage a pump when the system speed stays below this value for destage proof time.
[20–12]	**Reference/Feedback Unit**	bar	Unit used for the Feedback Source, prior to applying the feedback conversion.
[20–14]	**Maximum Reference/ Feedb.**	300	This setting determines the highest value obtainable by summing all reference sources for closed loop operation.
[22–20]	**Low Power Auto Set-up**	Off	This is the start of auto set-up of power data for no-flow power tuning.
[19–20]	**No Water Loss of Prime Fault**	Disabled	This parameter configures the **No Water Loss of Prime Fault**. Set this value to Man. Reset Alarm in order to utilize the No Water/Loss of Prime Restart Function. (are you saying about auto restart function? If yes, then it has to set as Alarm. If set to Man. Rest Alarm it has to be manually reset by the user)
[19–21]	**No Water Loss of Prime Protection Delay**	10s	Delay in seconds before controller goes in to No Water/Loss of Prime condition.
[22–50]	**End of Curve Function**	Off	This parameter configures the **End of Curve Function**. The End of Curve Alarm/ Warning is issued when the system pressure falls below the [22-52] **End of Curve Tolerance** for longer than the [22-51] **End of Curve Delay**.
[22–51]	**End of Curve Delay**	30	This parameter specifies the time between detection of an End of Curve event and when the action defined in End of Curve Function is issued.

Parameter number	Parameter name	Default value	Description
[22–52]	End of Curve Tolerance	20%	This parameter sets the pressure drop allowed in absolute units of feedback/ setpoint for the pressure (Pset) before canceling the sleep mode.

7.4.3 Start-Up Genie (Smart Setup)

This controller is equipped with a Start-Up Genie for the North America regional setting or Smart Setup for the International regional setting which allows the user to easily configure the pump controller for various pump control applications. The Start-Up Genie (Smart Setup) configures parameters that are based on the selections that are made by the user for sensor source in Booster pump application (open loop in hydraulic systems), or for sensor or sensorless source in HVAC pump application (closed loop in hydraulic systems). The Start-Up Genie (Smart Setup) allows the user to configure the Motor, Application, Multipump Setup, Feedback, Setpoint, Flow Compensation, Pump Protection, Digital Input, Relay & Analog Output, Communication, Bypass, and Maintenance. The application types include Single Pump Control, Multipump Control, Speed Control, Follower Control (only available for North America regional setting) and Test Run Mode. See *Setup and commissioning* on page 119 for details.

7.4.3.1 Start-Up Genie (Smart Setup) block diagram

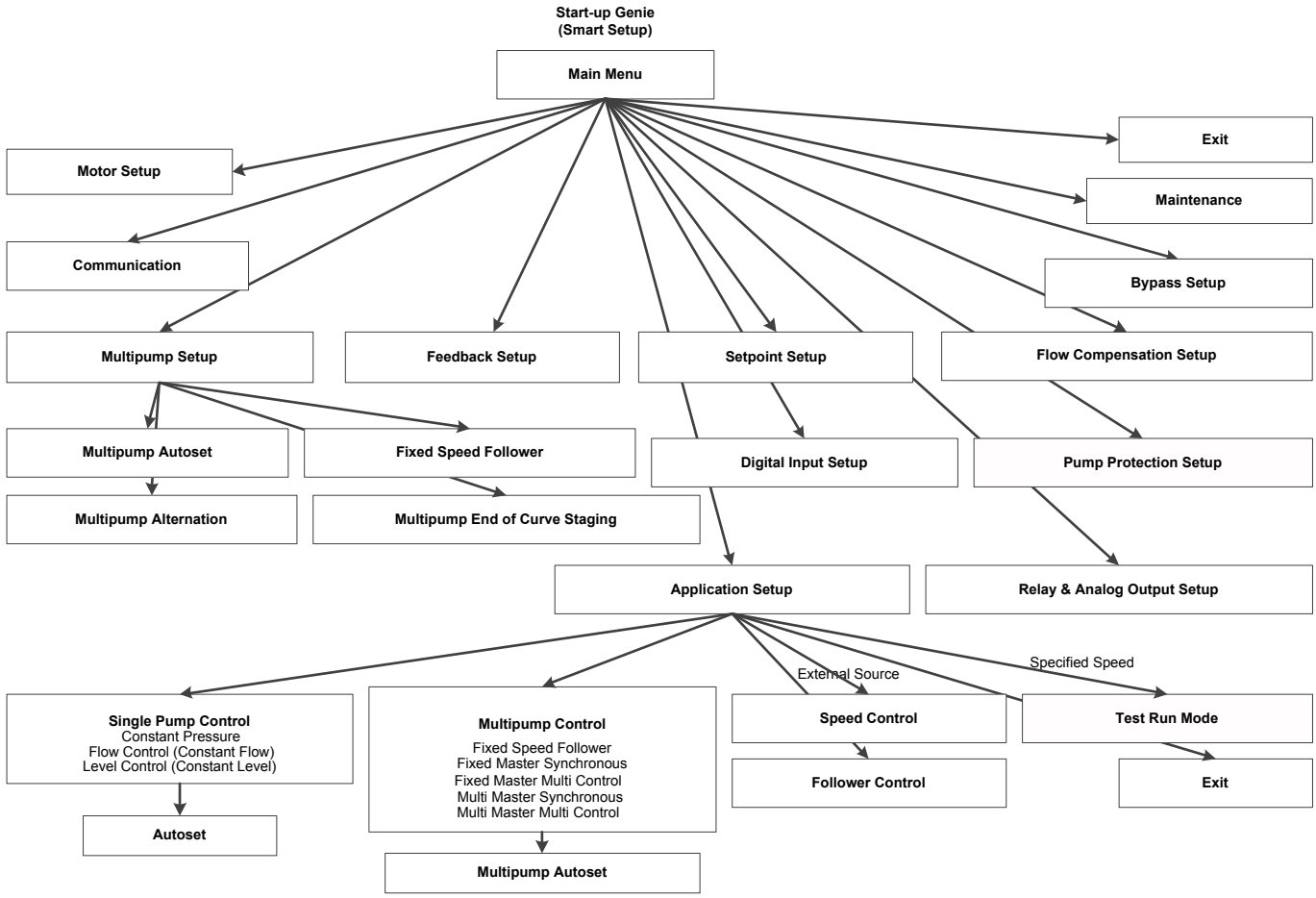

Figure 90: Start-Up Genie (Smart Setup) block diagram

Start-Up Genie (Smart Setup) block diagram notes:

- Multipump Setup is only visible after Multipump Control has been selected in Application Setup.
- Multipump Control requires an MCO301 Programmable API option A or B card.
- Feedback Setup is not available for Sensorless mode.
- Bypass Setup requires a bypass panel that has a MCO104 Electronic Controlled Bypass card.
- Follower Control setup is only available in Application Setup for North America regional setting.
- Fixed Master Synchronous and Fixed Master Multi Control are only available in Multipump Control Setup for North America regional setting.

7.4.3.2 Start-Up Genie (Smart Setup) setup functions

The following table shows all functions that can be configured by Start-Up Genie (Smart Setup).

Note: When the MCO301 Programmable API option card (option A or B) is not installed, the pump controller will operate on standard configuration. Not all functions in the following table can be configured.

Table 23: Start-Up Genie (Smart Setup) Setup functions

Flow Diagrams	Setup Information	Flow-Diagram No.	Screen Table No.	Section
Main Menu	• Regional Settings • Language • Sensor Source: – Sensor – Sensorless • Booster and HVAC Pump • Pump Application Type: – HVAC – Booster • Setup Selection: – Motor – Application – Multipump Setup – Feedback – Setpoint – Flow Compensation – Pump Protection – Digital Input – Relay & Analog Output – Communication – Bypass – Maintenance – Exit	*Figure 91: Main Menu Flow Diagram* on page 123	*Table 25: Main Menu Screens* on page 124	*Main Menu setup* on page 122
Motor Setup	Power, Voltage, Frequency, Speed, Current and Current Limit, Motor Type (Surface and Submersible), Sleep Speed/Low Limit, Filter Type, Automatic Motor Adaptation (AMA)	*Figure 92: Motor Setup Flow Diagram* on page 127	*Table 26: Motor Setup Screens* on page 128	*Motor setup* on page 126

Flow Diagrams	Setup Information	Flow-Diagram No.	Screen Table No.	Section
Application Setup	• Operating Mode: – Single Pump Control – Multipump Control – Speed Control – Test Run Mode – Exit	*Figure 93: Application Setup Flow Diagram* on page 130	*Table 28: Application Setup Screens* on page 131	*Application setup* on page 129
Single Pump Control Setup	Pump Application Type: • Booster: – Constant Pressure – Flow Control – Level Control • HVAC: – Constant Pressure – Flow Control Units, Tank Fill/Empty, Ramp Time	*Figure 95: Single Pump Control Flow Diagram* on page 134	*Table 31: Single Pump Control Setup Screens* on page 135	*Single Pump Control setup* on page 131
Autoset	Setpoint 1, Autoset for Constant Pressure, Flow Control and Level Control	*Figure 96: Autoset Flow Diagram* on page 143	*Table 34: Autoset Screens* on page 144	*Autoset* on page 138
Multipump Control Setup	• Fixed Speed Follower • Fixed Master Synchronous • Fixed Master Multi Control • Multi Master Synchronous • Multi Master Multi Control	*Figure 97: Multipump Control Flow Diagram* on page 148	*Table 35: Multipump Control Screens* on page 148	*Multipump Control setup* on page 147
Speed Control Setup	Speed Reference Source, Terminal 53 and 54 Low/High Ref./Feedb. Values, Min/Max Speed Reference	*Figure 98: Speed Control Setup Flow Diagram* on page 153	*Table 36: Speed Control Setup Screens* on page 153	*Speed Control setup* on page 152
Follower Control Setup	• IPC Follower Control • PLC Follower Control	*Figure 100: Follower Control Flow Diagram* on page 156	*Table 37: Follower Control Setup Screens* on page 157	*Follower Control setup* on page 155
Test Run Mode Setup	Test Run Speed and Ramp Time	*Figure 101: Test Run Mode Flow Diagram* on page 159	*Table 38: Test Run Mode Setup Screens* on page 159	*Test Run Mode setup* on page 158
Multipump Setup	Number of Pumps/Standby Pumps, Digital Output Pin 6 & 7/Controls Pump 1 & 2, Relay 1 controls Pump 3, Staging/ Destaging Threshold/Delay, Forced Destaging Threshold/ Delay, Timed Destage/Delay	*Figure 102: Multipump Setup Flow Diagram* on page 160	*Table 39: Multipump Setup Screens* on page 161	*Multipump setup* on page 160
Multipump Autoset	Setpoint 1, Constant Pressure, Flow Control and Level Control	*Figure 103: Multipump Autoset Flow Diagram* on page 169	*Table 42: Multipump Autoset Screens Table* on page 170	*Multipump Autoset* on page 163
Fixed Speed Follower Setup	Staging Bandwidth, Stage Proof Time, Destage Proof Time, Fixed Speed Bandwidth	*Figure 104: Fixed Speed Follower Flow Diagram* on page 173	*Table 43: Fixed Speed Follower Screens* on page 174	*Fixed Speed Follower setup* on page 173

Flow Diagrams	Setup Information	Flow-Diagram No.	Screen Table No.	Section
Multipump End of Curve Staging Setup	Flow Feedback Input, High/Low Feedback Value, Maximum Pump Flow, EOC Staging Threshold/Proof Time, EOC Destaging Threshold/Proof Time, Flow Destage, Flow Destaging Threshold/Proof Time	*Figure 105: Multipump End of Curve Staging Flow Diagram* on page 176	*Table 44: Multipump End of Curve Staging Flow Diagram* on page 176	*Multipump End of Curve Staging setup* on page 175
Multipump Alternation Setup	Alternation, Alternation Time Interval, Pump Exercise, Pump Exercise Idle Time/Run Time	*Figure 106: Multipump Alternation Flow Diagram* on page 179	*Table 45: Multipump Alternation Screens* on page 179	*Multipump Alternation setup* on page 178
Feedback Setup	Control feedback sources , Feedback Function, Feedback 1, 2, 3 & 4 Sources, Low/High Feedback 1, 2, 3 & 4 Values, Sensor Faults, All Zone Failure Function/Speed/Frequency, Number of Pumps Running	*Figure 107: Feedback Setup Flow Diagram* on page 182	*Table 46: Feedback Setup Screens* on page 183	*Feedback setup* on page 180
Setpoint Setup	Number of Setpoints, Setpoints 1, 2, 3 & 4 Alternative Setpoint Selection	*Figure 108: Setpoint Setup Flow Diagram* on page 189	*Table 47: Setpoint Setup Screens* on page 190	*Setpoint setup* on page 188
Pipe Fill Function Setup	Triggered Pressure, Speed Step, Steady Time, Dead Band, Pipe Fill Max Pump	*Figure 109: Pipe Fill Function Flow Diagram* on page 193	*Table 48: Pipe Fill Function Screens* on page 194	*Pipe Fill Function setup* on page 192
Flow Compensation Setup	Total Friction Loss, Flow Feedback Input, High/Low Feedback Value, Maximum Pump Flow, Flow Meter, Flow approximation	*Figure 111: Flow Compensation Setup Flow Diagram* on page 196	*Table 50: Flow Compensation Setup Screens* on page 197	*Flow Compensation setup* on page 195
Pump Protection Setup	Sleep Mode, No Water/Loss of Prime, Suction Protection, System Protection, Digital I/O Protection, Priming Delay	*Figure 112: Pump Protection Setup Flow Diagram* on page 199	*Table 51: Pump Protection Setup Screens* on page 200	*Pump Protection setup* on page 198
Sleep Mode	Minimum/Sleep Frequency/ Speed, Restart Different, Wake-up Speed, Minimum Run/ Sleep Time, No Flow Power Calibration	*Figure 113: Sleep Mode Flow Diagram* on page 202	*Table 52: Sleep Mode Screens* on page 203	*Sleep Mode setup* on page 201
No Water/Loss of Prime	Prime Fault, Protection Delay, Restart Time/Attempts, No Flow Power Calibration	*Figure 114: No Water/ Loss of Prime Flow Diagram* on page 205	*Table 53: No Water/Loss of Prime Setup Screens* on page 205	*No Water/Loss of Prime setup* on page 204
Suction Protection	High/Low Suction Source, High/Low Feedback Value, High/Low Suction Fault/Cut-out/Delay/ Restart Limit	*Figure 115: Suction Protection Flow Diagram* on page 207	*Table 54: Suction Protection Screens* on page 207	*Suction Protection setup* on page 206

Flow Diagrams	Setup Information	Flow-Diagram No.	Screen Table No.	Section
Digital Suction Protection	Low Suction Protection through Digital Input 27, Low Suction Cut-out Delay, High Suction Protection through Digital Input 29, High Suction Cut-out Delay	*Figure 116: Digital Suction Protection Flow Diagram* on page 209	*Table 55: Digital Suction Protection Screens* on page 209	*Digital Suction Protection setup* on page 208
System Protection	Under Pressure Function/ Delay/Difference, Low System Cut-out/Limit/Delay, High System Cut-out/Limit/Delay, System Restart Time/Attempts	*Figure 117: System Protection Flow Diagram* on page 211	*Table 56: System Protection Screens* on page 211	*System Protection setup* on page 210
Digital I/O Protection	Pump Protection through Digital Input 19, 27 & 29, Pump Protect Delay	*Figure 118: Digital I/O Protection Setup Flow Diagram* on page 213	*Table 57: Digital I/O Protection Setup Screens* on page 214	*Digital I/O Protection setup* on page 213
Bypass Setup	Bypass Function/Drives Fail/ Pumps Running	*Figure 119: Bypass Setup Flow Diagram* on page 217	*Table 58: Bypass Setup Screens* on page 217	*Bypass setup* on page 215
Digital Input Setup	Terminals Digital Input 19/ 27/ 29/ 32/33	*Figure 120: Digital Input Setup Flow Diagram* on page 221	*Table 61: Digital Input Setup Screens* on page 222	*Digital Input setup* on page 218
Relay & Analog Output Setup	Relay 1/Relay 2 Function , Terminal 42 Current Setting/ Output Function, Terminal, Terminal 42 Output Min Scale/Max Scale	*Figure 121: Relay & Analog Output Setup Flow Diagram* on page 225	*Table 64: Relay & Analog Output Setup Screens* on page 225	*Analog Output* on page 224
Communication Setup	Modbus RTU/BACnet, Address, Baud Rate, Parity/Stop Bits, BACnet Device Instance	*Figure 122: Communication Setup Flow Diagram* on page 226	*Table 65: Communication Setup Screens* on page 227	*Communication setup* on page 226
Maintenance	Reset running hours	*Figure 123: Maintenance Flow Diagram* on page 228	*Table 66: Maintenance Setup Screens* on page 228	*Maintenance* on page 228

7.4.3.3 Start-Up Genie (Smart Setup) flow-diagram symbols

Flow diagrams and detailed screen tables are provided in each setup function for step-by-step accessing the Start-Up Genie (Smart Setup) configuration. The following shapes and connector symbols are used for the flow diagrams.

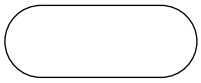

Starting or ending Start-Up Genie (Smart Setup) configurations.

Flow direction from a screen to the next screen or to branching.

Start-Up Genie (Smart Setup) function. The number in the circle indicates the function number for connecting different flow diagrams together.

Screen without selection(s). The number in the square shape indicates the screen number on the first column of the screen tables.

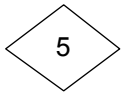

Screen with selection(s). The number in the diamond shape indicates the screen number on the first column of the screen tables.

Branching for selections that were selected in the previous screen(s) and cannot be changed at the current screen. This symbol doesn't have a number.

( )

Text condition(s) included in the parenthesis were selected in the previous screen(s).

Note: some previous conditions may be changed by directly accessing the Main Menu screen and changing the value in the related parameter(s).

Note: in screen tables the parentheses also indicate the included text condition(s) that were selected in the previous screen(s).

7.4.4 Main menu

The parameters in the Main Menu are grouped by category. Note that some groups are not visible unless the appropriate option card is installed. The parameter groups in the Main Menu are shown below.

Parameter Group	Parameter Group Name
0	Operation / Display
1	Load and Motor
2	Brakes
3	References
4	Limits / Warnings
5	Digital In/Out
6	Analog In/Out
8	Comm.and Options
9	Profibus*
10	CAN Fieldbus*
11	LonWorks*
12	Ethernet
13	Smart Logic
14	Special Functions
15	Drive Information
16	Data Readouts
18	Info & Readouts
19	Application Parameters **
20	Drive Closed Loop
21	Ext.Closed Loop
22	Appl.Functions
23	Time-based Functions
24	Appl.Functions 2

Parameter Group	Parameter Group Name
25	Cascade ControllerConstant Slave Controller
26	Analog I/O Option
31	Bypass Option ***

* Appropriate option card must be installed.

** MCO301 Programmable API A/B option card is installed and functioning.

*** Bypass panel that has a MCO104 Electronic Controlled Bypass card installed and functioning is required.

Refer to the appendix for a complete parameter list.

7.5 Setup and commissioning

7.5.1 Start-Up Genie (Smart Setup) setup

CAUTION:

When a Start (Closed) signal is present on DI18, the controller can start the pump/motor at any time without warning. Set DI18 to Stop (Open) or press the [Off] operation key before using the Start-Up Genie (Smart Setup). Apply the Start signal to the controller only when pump/motor operation is desired.

The Start-Up Genie (Smart Setup) provides a fast and easy method for configuring the controller for various pump applications. The Navigation keys are used to make selections and the [Info] button can be pressed at any time while in the Start-Up Genie (Smart Setup) to retrieve additional information about the current screen or parameter.

To navigate through the Start-Up Genie (Smart Setup), press [OK] to enable editing of a screen or parameter. Use the up and down arrows to highlight the desired selection then press [OK] to confirm the selection. Next use the down arrow to save the parameter and navigate to the next screen. The up arrow transitions to the previous screen. If the screen shows the desired setting is already selected for a particular parameter or function, simply use the down arrow to proceed to the next screen.

NOTE: **Be sure to press the down arrow key to save the parameter after confirming the selection.** This ensures all associated parameter settings and background calculations are performed and saved properly. After pressing the down arrow to save the parameter the Start-Up Genie (Smart Setup) may be slow to respond as these settings and calculations are performed.

Press [Cancel] to exit parameter editing without saving or to change a saved parameter or selection back to the previously saved while still in the current screen. Pressing [Back] will also exit parameter editing without saving. To exit the Start-Up Genie (Smart Setup) at any time, first exit parameter editing then press [Back] then [OK].

The arrows shown in the lower right hand corner of the LCP indicate the options for navigation. When an up arrow is displayed, pressing the up arrow will transition to the previous screen. When a down arrow is displayed, pressing the down arrow will transition to the next screen. When both an up and down arrow are displayed then pressing the up arrow will transition to the previous screen and pressing the down arrow will transition to the next screen.

NOTE: **Ensure the controller is set to Stop (DI 18 Open) and is set to Setup 1 prior to running the Start-Up Genie (Smart Setup).**

The Start-Up Genie (Smart Setup) starts automatically the first time the controller has been powered in the field or if the Start-Up Genie (Smart Setup) has not been used previously or after a factory reset or an initialization. The Start-Up Genie (Smart Setup) can be started at any time by accessing the *Quick Menus* screen by pressing [Quick Menu] then using the

up and down arrows to highlight Q4 Start-Up Genie for North America regional setting or Q4 Smart Start for International regional setting.

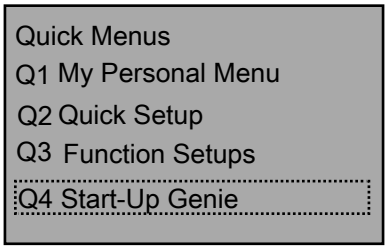

Press [OK] to enter the Start-Up Genie (Smart Setup).

The first menu requires the user to set the region. To select a region, press [OK] to enable parameter editing. Use the up and down arrows to highlight the North America or International regional setting then press [OK] to save the selection.

- A Start-Up Genie text is displayed for the North America region setting or a Smart Setup text is displayed for the International region setting on the top left line of the LCP screen for general information through out the setting of Start-Up Genie (Smart Setup) configuration.

Next use the down arrow to proceed to the next section.

The second menu requires the user to set the language.

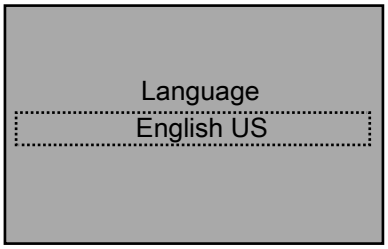

The next screen is the Sensor Source screen for the user to select Sensor or Sensorless source if the sensorless data have been pre-programmed at the factory.

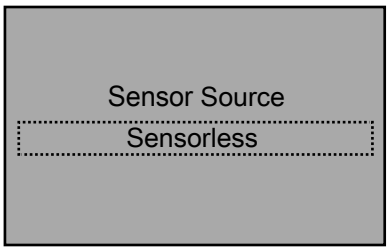

Note:

- Sensor mode is a default mode. The Sensor Source screen is not displayed if the sensorless data have not been detected.
- Sensorless information can be found in the parameter group [20-6*] Sensorless.

The next screen will be the Pump Application Type for the user to select Booster or HVAC pump application type if the sensor source is Sensor.

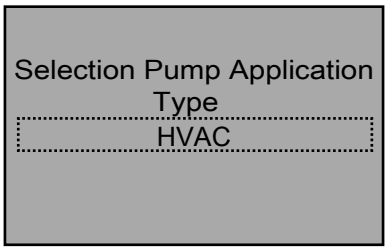

Note: HVAC is the default pump application type in Sensorless mode. The Pump Application Type screen is not displayed if Sensorless was selected in the previous Sensor Source screen since the Booster pump application type is not available in Sensorless mode.

If this is the first time the Start-up Genie (Smart Setup) has run, it will guide the user through the setup of the motor parameters.

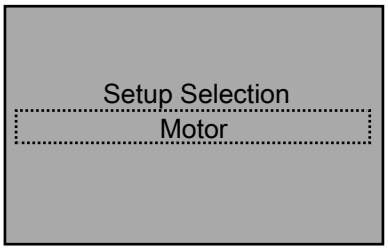

If the Start-up Genie (Smart Setup) has run previously, the user can choose the desired *Setup Selection* to configure a specific function in the controller. Use the up and down arrows to highlight the desired setup and press [OK] to enter the setup. The choices for the *Setup Selection* menu are described in the Setups with the Start-up Genie (Smart Setup) table below.

There are various screen types in the Start-Up Genie (Smart Setup). One of these is the dual parameter screen.

To navigate the dual parameter screen use the up and down arrows to highlight the desired parameter. Press [OK] to enable editing of the highlighted parameter. Use the up and down arrows to set the parameter to the desired setting. Press [OK] to confirm the selection. To modify the other parameter shown, use the up and down arrows to highlight the other parameter and repeat the steps used to set and confirm the setting the previous parameter.

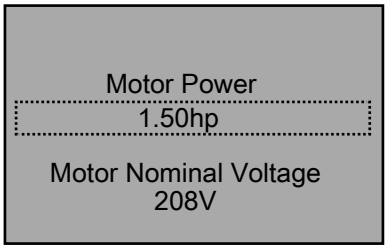

Within the Start-Up Genie (Smart Setup) some screens will display "[unit]" after a parameter value. This nomenclature is used when a parameter is entered in the control units selected in the setup. For example, when entering the Setpoint for closed loop pressure control, the value could be entered in psi, bar, in HG, etc. In this case "[unit]" is used to account for this variation in units.

Table 24: Setups with the Start-up Genie (Smart Setup)

Setup	Description
Motor	This setup allows configuration of the motor parameters. These settings are found on the motor nameplate.
Application	The Application setup allows the user to configure the motor type, operating mode, units and ramps.

Setup	Description
Multipump Setup	This setup configures the controller to operate up to 4 multi pumps using up to 4 MCO301 Programmable API option cards.
Feedback	This setup allows configuration of up to 3 feedback sources. The feedbacks can be taken in to the controller through analog inputs or communications. Note: The Feedback setup is not available for sensorless source.
Setpoint	This setup allows configuration of up to 2 setpoints. If multiple setpoints are used, the setpoint is selected by using DI 33.
Flow Compensation	This setup configures the Flow Compensation function which can automatically adjust the system setpoint to offset the affect of friction loss in the system.
Pump Protection	This setup configures Sleep Mode, No Water/Loss of Prime, Digital I/O Protection, Suction Protection and System Protection functions. NOTE: This setup is only visible after the Multipump Control setup under Application operating mode has been selected and invisble again after the Multipump Control setup has been de-selected.
Digital Input	This setup allows configuration of the digital inputs.
Relay and Analog Output	This setup allows configuration of the relay and analog outputs.
Communication	This setup configures the on board fieldbus communications.
Bypass	This setup allows the bypass panel to connect the motor to the drive or to the power line. NOTE: The Bypass selection is only available with a Bypass panel.
Maintenance	This setup allows the running hours counter to be reset.

7.5.2 Main Menu setup

The Main Menu setup configures the Start-Up Genie (Smart Setup) setup that was run before, or was not run before or after a factory reset/initialization.

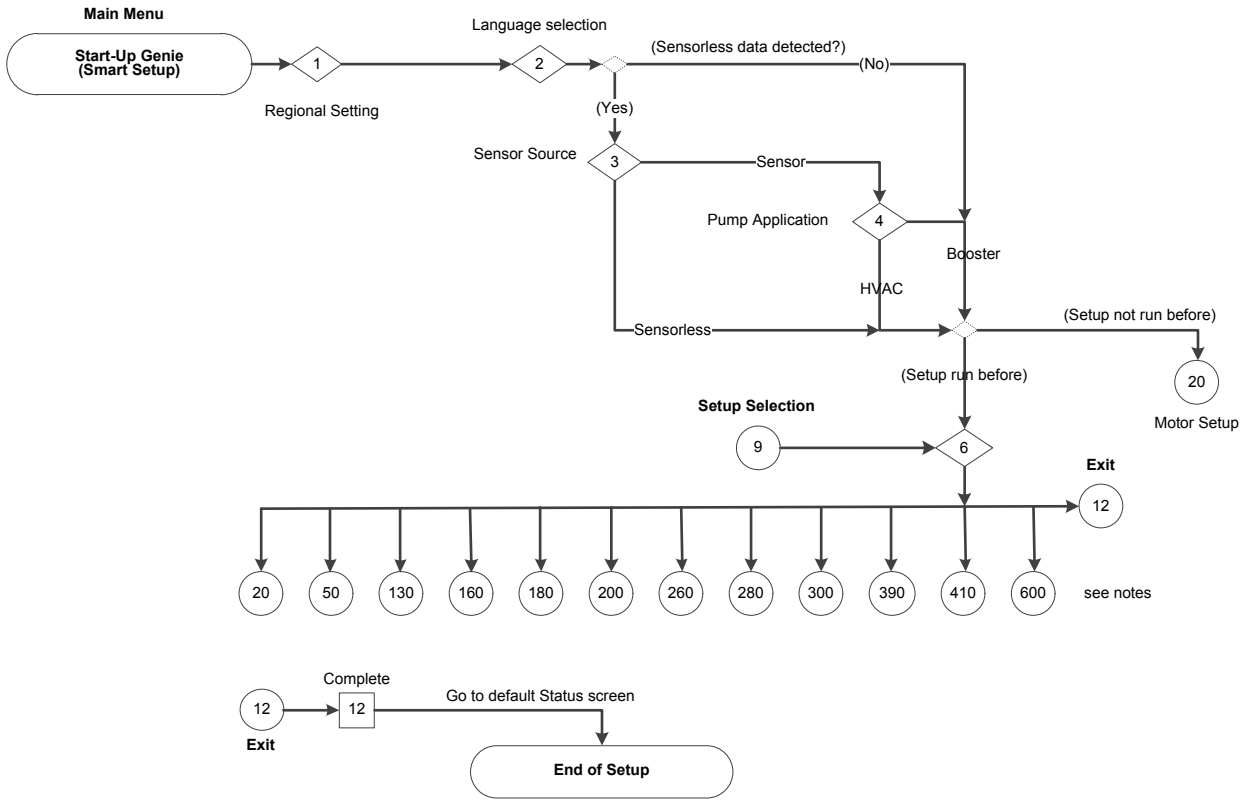

Figure 91: Main Menu Flow Diagram

Main Menu flow diagram notes:

20: Motor Setup

50: Application Setup

130: Feedback Setup (not available in Sensorless mode)

160: Setpoint Setup

180: Flow Compensation Setup

200: Pump Protection Setup

260: Digital Input Setup

280: Relay & Analog Output Setup

300: Communication Setup (not available in Test Run mode)

390: Maintenance

410: Multipump Setup (only available after Multipump Control operating mode was selected)

600: Bypass Setup (only available with a Bypass panel)

Table 25: Main Menu Screens

Screen ID No.	Screen	Selection	Parameters Setup Information	Screen Information
1	Regional Settings North America	[North America] [International]	• (Setup not run before): [22-00] = 20s, [22-36] = 1500 RPM (All Setup), [22-37] = 50 Hz (All Setup), [5-10] = MCO Specific, [0-24] = 1989, [5-12] = No Operation, [3-04] = External/Preset. • (Setup run before): [22-00] = 20 sec only if [22-00] < 1 sec. • North America: Set [0-03] = North America, [0-02] = Hz , [3-03] = 60 Hz if Setup not run before. • International: Set [0-03] = International.	Continue to screen ID #2.
2	Language English US	• North America: [English US] [French] [Spanish] • International [English] [German] [French] [Danish] [Spanish] [Italian] [Swedish] [Dutch] [Chinese] [Finnish] [Portuguese] [Slovenian] [Korean] [Turkish] [Czech] [Polish] [Russian]	Note: The language can be changed in [0-01] **Language**.	• (Sensorless data is detected): continue to screen ID #3. • (Sensorless data is not detected): – (Setup not run before): continue to the Motor Setup Screens table. – (Setup run before): continue to screen ID #6.

Screen ID No.	Screen	Selection	Parameters Setup Information	Screen Information
3	Sensor Source Sensorless	[Sensorless] [Sensor]	Sensorless: Pump Application Type = HVAC: [20-21] = 15, [1-25] = 1750RPM.	• Sensor: continue to screen ID #4. • Sensorless: – (Setup not run before): continue to the Motor Setup Screens table. – (Setup run before): continue to screen ID #6.
4	Selection Pump Application Type HVAC	[HVAC] [Booster]	• (Setup not run before): – (International): [19-20]=[22-21]=Disabled, 22-26=Off. If HVAC: [4-12]=30Hz, [20-21]=1. If Booster: [4-12]=20Hz, [20-21]=3.5, [19-61]=[19-64]=1. – (North America): If HVAC: [20-21]=15, [1-25]=1750RPM. If Booster: [20-21]=50, [19-61]=[19-62]=[19-64]=5, [1-25]=3450RPM. [1-00]=Open Loop, [22-50]=Off. • (Setup run before): – If Sensorless: Pump application type = HVAC, [19-20]=[19-24]=Disabled. If (Active Setup=1): [0-10]=[0-11]= Setup 1.	• (Setup not run before): continue to the Motor Setup Screens table. • (Setup run before): continue to screen ID #6.

Screen ID No.	Screen	Selection	Parameters Setup Information	Screen Information
6	Setup Selection Application	[Motor] [Application] [Multipump Setup] [Feedback] [Setpoint] [Flow Compensation] [Pump Protection] [Digital Input] [Relay & Analog Output] [Communication] [Maintenance] [Bypass] [Exit]		• Exit: continue to screen ID #12. • Other selections: continue to the selected Setup Selection Screens table. NOTE: • Multipump Setup is only visible after Multipump Control has been selected in Application Setup. • Bypass is only visible for a Bypass panel.
12	Start-Up Genie Complete Press [OK] to Exit	[OK]		OK: The default Status screen is displayed.

7.5.3 Motor setup

The motor data required to complete the Motor Setup can be found on the motor nameplate. The Start-Up Genie (Smart Setup) will prompt the user for Motor Power (kW or hp), Motor Nominal Voltage, Motor Nominal Frequency (Hz), Motor Nominal Speed (RPM), Motor Current (FLA) and Current Limit (only for Booster mode). The [1–80] **Function at Stop** will be set to Coast and [1–82] **Min Speed for Function at Stop [Hz]** to 10 Hz for both Booster and HVAC pump application types.

1. If a Booster pump application was selected, Current Limit (%) can be set as a percentage of the Motor Current (FLA). For example, if the Motor Current (FLA) indicated on the motor nameplate is 10A and the Motor Service Factor Current (SFA) is 11.5A, enter 115% for Current Limit (%). Be sure to correctly set the Motor Current (FLA) and Current Limit. These parameters configure the motor overload protection feature.
   - If a Submersible motor is selected, the controller is configured to have a 30 Hz minimum speed at [4-12] **Sleep Frequency/Low Limit [Hz]** (North America), ramp from stop to 29 Hz in 1 second ([1-78] **Compressor Start Max Speed [Hz]** = 29 Hz and [3-82] **Starting Ramp Up Time** = 1s, and [14-01] **Switching Frequency** is set to 2KHz.
   - If a Surface motor is selected, select the Sleep Speed/Low Limit for configuring parameter [4-11] **Motor Speed Low Limit [RPM]** (International) or [4-12] **Sleep Frequency/Low Limit [Hz]** (North America). The [1-78] **Compressor Start Max Speed [Hz]** is inactive and [3-82] **Starting Ramp Up Time** is set at 3s, and [14-01] **Switching Frequency** is set at 5KHz.
   - Next select a type for the Filter Type. Parameter [14-55] **Output Filter** will be set at No Filter for None, Reactor, Dv/Dt or HVAC, and Sine Wave Filter Fixed for Sine Wave. Parameter [14-01] **Switching Frequency** will be set at 4 kHz for Reactor, Dv/Dt or HVAC, and at 5 kHz for Sine Wave.
2. If an HVAC pump application was selected, the Current Limit (%) and Motor Type are not available for setting. For the North America regional setting, the controller is

configured to have a 18 Hz minimum speed ([4-12] **Sleep Frequency/Low Limit [Hz]**) for Sensor type and 24 Hz for Sensorless type. For the International regional setting, the Sleep Speed/Low Limit screen is next with the same configurations as for the surface motor type in the Booster pump application.

If the Regional setting is International, the Automatic Motor Adaptation (AMA) [1-29] can be performed. Select Off, Enable Complete AMA or Enable Reduced AMA for AMA settings.

The stop ramp is controlled by the default deceleration ramps [3-42] **Ramp 1 Ramp Down Time** and [3-52] **Ramp 2 Ramp Down Time**.

NOTE: There are various parameters that are linked to the motor parameter settings. Changing the motor parameter settings will also change the settings of these linked parameters. It is required to set the motor parameters first to avoid overwriting any settings that are made in the Start-Up Genie (Smart Setup).

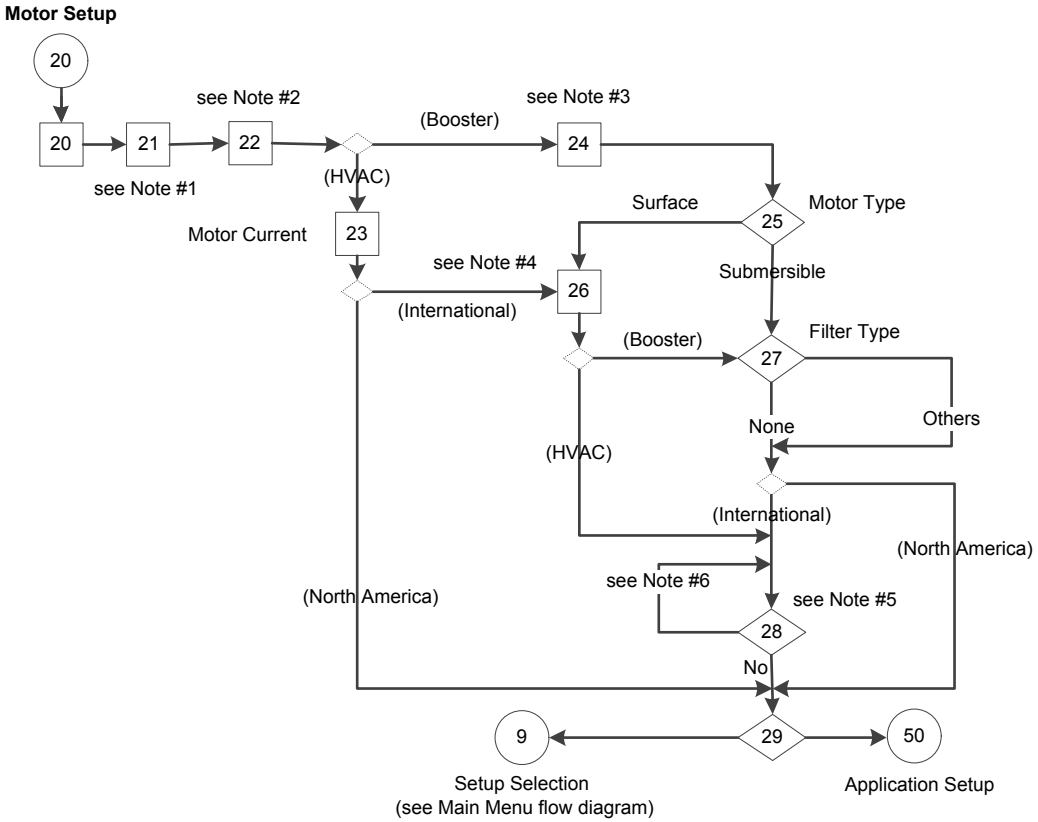

Figure 92: Motor Setup Flow Diagram

Motor Setup flow diagram notes:

- Note #1: Motor Power and Nominal Voltage
- Note #2: Motor Frequency and Nominal Speed
- Note #3: Motor Current and Current Limit
- Note #4: Sleep Speed/Low Limit
- Note #5: Automatic Motor Adaptation (AMA)
- Note #6: Follow instructions on the Status screen for Enabled Reduced AMA and Enabled Complete AMA

Table 26: Motor Setup Screens

20 Motor Setup				
Screen ID No.	Screens	Selections	[Parameters] Setup Information	Screen Information
20	Setup Selection Motor			The Motor setup is required to be completely configured at the first time of running Start-Up Genie (Smart Setup) setup or after a factory reset or an initialization.
21	Motor Power 1.50hp Motor Nominal Voltage 208V	_____ [kW/hp] _____ V	kW: [1-20] = first entry hp: [1-21] = first entry [1-22] = second entry.	Continue to screen ID #22.
22	Motor Frequency 60Hz Motor Nominal Speed 1704RPM	_____ Hz _____ RPM	[1-23] = first entry. [1-25] = second entry. [3-03] & [4-14] = [1-23] [22-37] = [1-23] * 0.85. [1-80] = Coast [1-82] = 10 Hz [22-33] = 4.14 x 0.5	• (HVAC): continue to screen ID #23. • (Booster): continue to screen ID #24.
23	Motor Current 5.48A	_____ A	[1-24] = entry. [3-82] = 3 s. [1-78] = 0 Hz [14-01] = 5 kHz (HVAC): [14-55] = No Filter • Sensor: [4-12] = 18 Hz • Sensorless: [4-12] = 24 Hz	• (International): continue to screen ID #26. • (North America): continue to screen ID #29. Note: This screen is only displayed in the HVAC pump application.
24	Motor Current 5.48A Current Limit 110.0%	_____ A _____%	[1-24] = first entry. [4-18] = second entry. [22-39] = [1-21] * [4-18] * 0.46, [22-35] = [22*39] * ([22-33] / [4-14]) ^3.	Continue to screen ID #25. Note: This screen is only displayed in the Booster pump application.
25	Motor Type Surface	[Submersible] [Surface]	• Submersible: [4-12] = 30 Hz [1-78] = 29 Hz [3-82] = 1 s [14-01] = 2 kHz	• Surface: continue to screen ID #26. • Submersible: continue to screen ID #27.

20 Motor Setup				
Screen ID No.	Screens	Selections	[Parameters] Setup Information	Screen Information
26	Sleep Speed / Low Limit 18.0Hz	_____ [RPM/Hz]	Rpm: [4–11] = entry Hz: [4-12] = entry [1-78] = 0 Hz [3-82] = 3 s [14-01] = 5 kHz	• (Booster): continue to screen ID #27. • (HVAC): continue to screen ID #28.
27	Filter Type Dv/Dt	[None] [Reactor] [Dv/Dt] [Sine wave]	• None: [14-55] = No Filter • Sine wave: [14-55] = Sine Wave Filter Fixed, [14-01] = 5 kHz • Reactor or Dv/Dt: [14-55] = No Filter, [14-01] = 4 kHz	• (International): Continue to screen ID #29. • (North America): Continue to screen ID #30.
28		[RPM/Hz]	Rpm: [4–11] = entry Hz: [4-12] = entry [1-78] = 0 Hz [3-82] = 3 s [14-01] = 5 kHz [14-55] = No Filter	See the above screen ID #27.
29	Automatic Motor Adaption (AMA) Off	[Off] [Enable Complete AMA] [Enable Reduced AMA]		• Off: continue to screen ID #29. • Others: follow instructions on the Status screen.
30	Continue to the Application Setup? Yes	[Yes] [No]		• Yes: continue to the Application Setup Screens table. • No: return to the Setup Selection screen ID #6 in the Main Menu Screens table.

7.5.4 Application setup

The next menu set is the Application setup which will allow selection and configuration of the application type and control response. Select the application type by first selecting the Operating Mode. Selecting the Operating Mode will configure specific parameters to configure the selected mode.

Note: If the Operating Mode is changed, any changes made to configure the previously configured Operating Mode will be overwritten.

The Operating Mode can be set to Single Pump Control, Multipump Control, Speed Control, Follower Control, or Test Run Mode.

NOTE:

- Setup 1 is the active setup for all operating modes.
- Multipump Control is the default value for the North America regional setting and Single Pump control is the default value for the International regional setting.
- Follower Control is only available for the North America regional setting.

The various Operating Modes are defined below.

Table 27: Operating modes

Operating Mode	Description
Single Pump Control	This mode is the default Operating Mode. Use this mode for constant pressure, flow or level applications that uses one controller operating a single pump. Parameters [19-56] and [8-31] should be set at 1 in single pump mode.
Multipump Control	This mode requires up to four MCO301 Programmable API option cards installed to the controllers to configure a system that has one master with up to three followers, or multipimp applications. There will always be one master at one time. All pumps can run synchronously or configured multiple application. Note: Multipump Control selection is only available when a MCO301 Programmable API option cards is installed and functioning.
Speed Control	This mode configures the controller to accept a speed command through an analog input, pulse input or extended PI loop [21–**]. A start signal on DI 18 [5–10] is required.
Follower Control	This mode configures the controller to be operated as IPC Follower Control or PLC Follower Control.
Test Run Mode	Test Run Mode allows the controller to be configured to run the pump at specified speed for a specified amount of time. The action will be started by a digital input (DI 18).

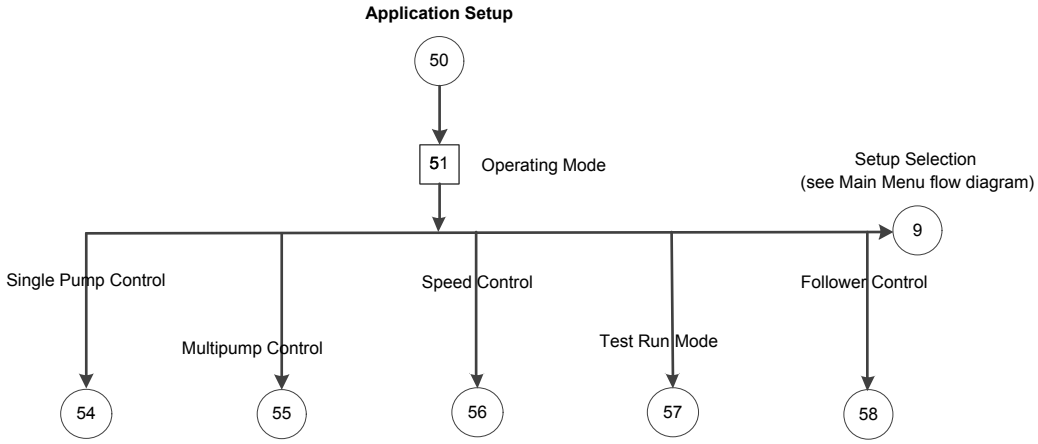

Figure 93: Application Setup Flow Diagram

Table 28: Application Setup Screens

50 Application Setup				
Screen ID No.	**Screens**	**Selections**	**Parameters Setup Information**	**Screen Information**
50	Setup Selection Application			The Application setup is recommended to be completely configured for the first time of running Start-Up Genie (Smart Setup) setup or after a factory reset or an initialization.
51	Operating Mode CHANGING OPERATING MODE WILL OVERWRITE CURRENT SETUP! Single Pump Control	[Single Pump Control] [Multipump Control] [Speed Control] [Follower Control] [Test Run Mode] [Exit]	If (Old) Operating Mode = selection: [5-10]=[75] MCO Specific. If Selection = Multipump Control: [19-01] = [5] Multi Master MulCtl.	• Exit: continue to the Setup Selection in Main Menu Screens table. • Continue to the screens table of the selected Operating Mode.

7.5.5 Single Pump Control setup

The Single Pump Control is the default operating mode for the International regional setting. Use this mode for Constant Pressure, Flow Control (Constant Flow), or Level Control (Constant Level) applications that use one controller operating a single pump.

- The Application Type screen allows selection of the type of control. For Booster pump application select either Constant Pressure, Flow Control or Level Control for the North America regional setting, or Constant Pressure, Constant Flow or Constant Level for International regional setting. For HVAC pump application, select either Constant Pressure or Flow Control for the North America region or Constant Pressure or Constant Flow for the International region. Level Control (Constant Level) is not available in HVAC pump application. Sensorless mode is not available in Booster pump application.
- Select the appropriate units for the application.
- Select whether the application is a Tank Fill or Tank Empty application.
- In a 'Fill' application the pump will speed up when the level in the tank drops below the setpoint level.
- In an 'Empty' application the pump will speed up when the level in the tank is above setpoint level.
- The [20-81] **PID Normal / Inverse Control** parameter is set to Inverse for the 'Empty' application and to Normal for the 'Fill' application.

If Booster mode is the pump application, the ramp times for North America or International regional setting are selected next. Select from either a Fast, Medium or Slow ramp.

Acceleration ramps are set in [3-41] **Ramp 1 Ramp Up Time**. Deceleration ramps are set in [3-42] **Ramp 1 Ramp Down Time**.

Table 29: Ramp Time values for North America Region

Parameters	Level Control			Constant Pressure/Flow Control		
	Slow	Medium	Fast	Slow	Medium	Fast
[3-41] **Ramp 1 Ramp Up Time**	80 secs	40 secs	20 secs	20 secs	10 secs	5 secs

Parameters	Level Control			Constant Pressure/Flow Control		
	Slow	Medium	Fast	Slow	Medium	Fast
[3-42] **Ramp 1 Ramp Down Time**	80 secs	40 secs	20 secs	10 secs	5 secs	3 secs
[3-51] **Ramp 2 Ramp Up Time**	90 secs	90 secs	90 secs	70 secs	70 secs	70 secs
[3-52] **Ramp 2 Ramp Down Time**	90 secs	90 secs	90 secs	70 secs	70 secs	70 secs

Table 30: Ramp Time values for International Region

Parameters	Constant Level			Constant Pressure/Constant Flow		
	Slow	Medium	Fast	Slow	Medium	Fast
[3-41] **Ramp 1 Ramp Up Time**	16 secs	12 secs	8 secs	8 secs	6 secs	4 secs
[3-42] **Ramp 1 Ramp Down Time**	16 secs	12 secs	8 secs	8 secs	6 secs	4 secs
[3-51] **Ramp 2 Ramp Up Time**	90 secs	90 secs	90 secs	70 secs	70 secs	70 secs
[3-52] **Ramp 2 Ramp Down Time**	90 secs	90 secs	90 secs	70 secs	70 secs	70 secs

In Sensorless mode, ramp time selection is not available. 10 seconds are set by the Start-up Genie (Smart Setup) for both acceleration and deceleration Ramp 1 time in both Sensor and Sensorless modes.

The Regulation Band is the next screen if the [Regional Setting] = International and Pump Application Type = Booster.

- Regulation Band (International only): a percentage of the required value, centered on it. When the read pressure is close to the required value, inside the regulation band, the system uses slow ramps. Outside the regulation band the system uses fast ramps. See the Regulation band information in the below Ramp Control description.
- Ramp Control description (International only): System control uses fixed ramps to regulate system variable to follow setpoint as described below.
- Ramps can be set to one of the preset values:
  - **Slow**: big pump size
  - **Medium**: medium pump size
  - **Fast**: small pump size

Ramp time	Booster				HVAC			
	Ramp 1		Ramp 2		Ramp 1		Ramp 2	
	Up	Down	Up	Down	Up	Down	Up	Down
Fast	4	4	70	70	8	8	90	90
Medium	6	6	70	70	12	12	90	90
Fast	8	8	70	70	16	16	90	90

The ramp is expressed in seconds and represents the time needed for the motor to go from 0 Hz to the maximum frequency, or from maximum frequency to 0 Hz.

Ramp 1 (up or down) is always used below minimum frequency/sleep frequency and when feedback value is outside the regulation band.

Ramp 2 (up or down) is used when feedback value is inside the regulation band.

The motor control will use the ramp-up (1 or 2) till the feedback value reaches the upper limit of the regulation band. Once the upper limit is reached, the motor control will use the ramp-down (1 or 2) till the feedback value reaches the lower limit of the regulation band.

Parameter	Description
3-41	Ramp 1 Ramp Up Time
3-42	Ramp 1 Ramp Down Time
3-51	Ramp 2 Ramp Up Time
3-52	Ramp 2 Ramp Down Time

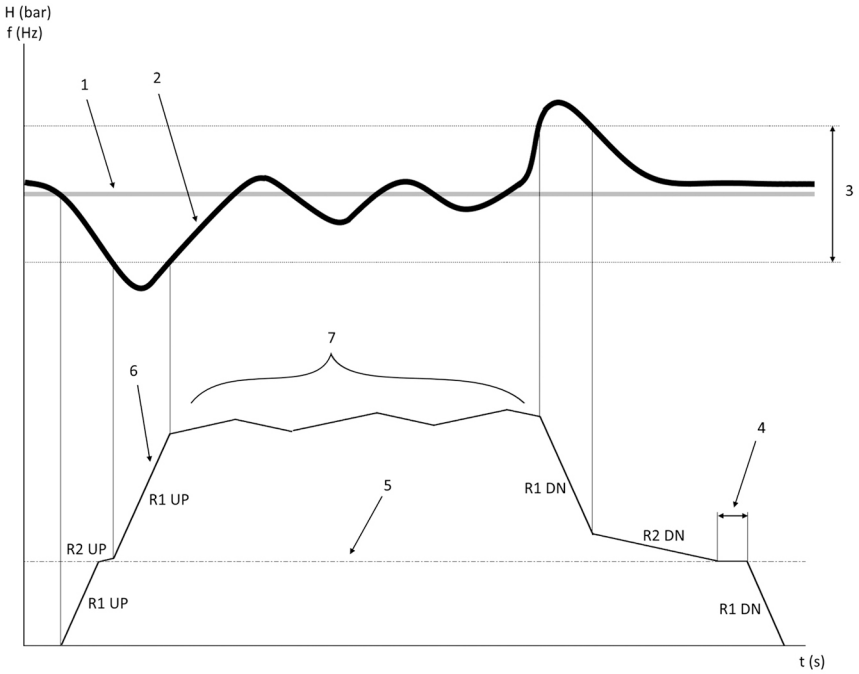

Figure 94: Chart

1. Setpoint
2. Control feedback (actual value)
3. Regulation band
4. Sleep delay
5. Sleep frequency
6. Output frequency
7. Regulating with Ramp 2 Up and Ramp 2 Down (slow ramps)

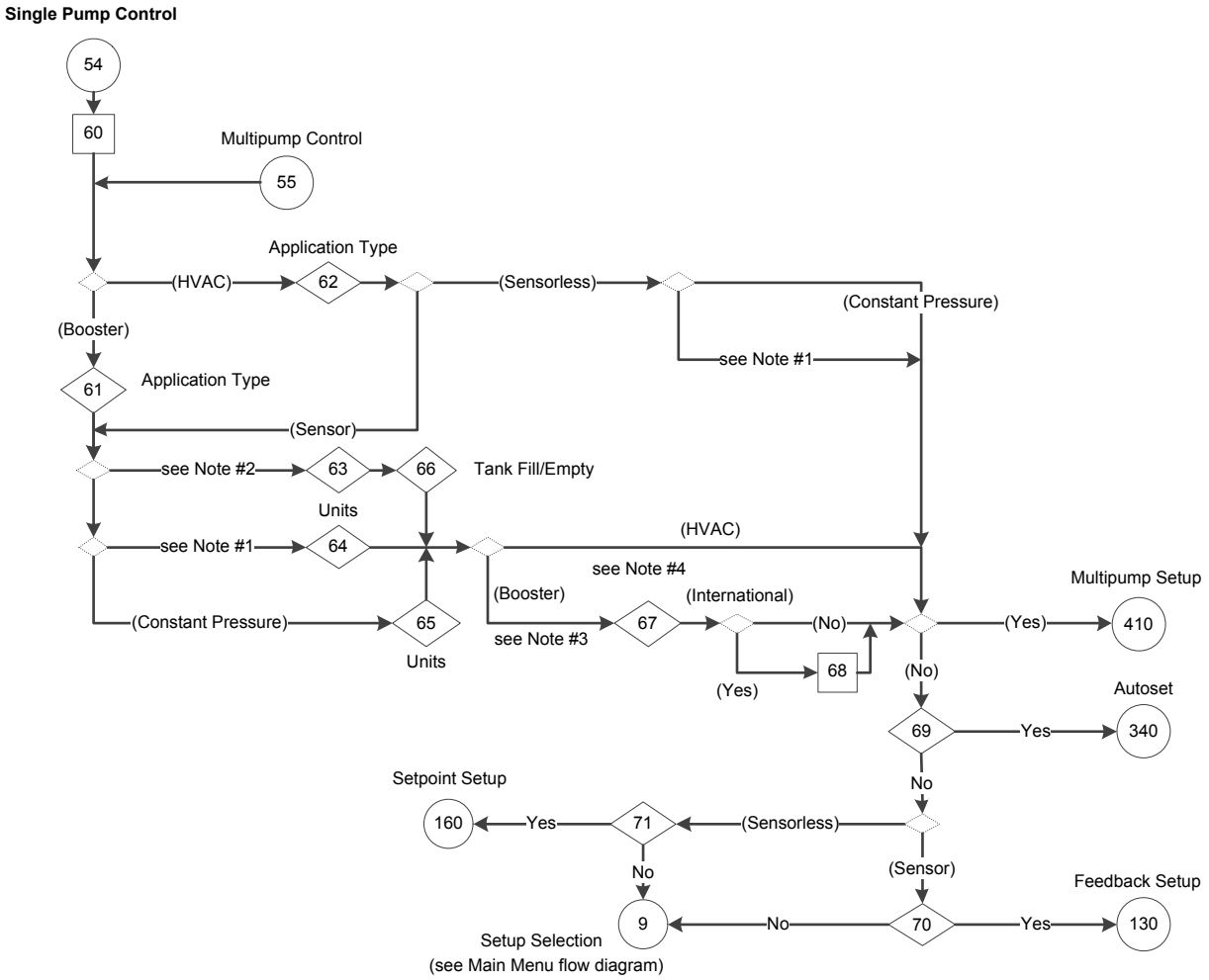

Figure 95: Single Pump Control Flow Diagram

Single Pump Control flow diagram notes:

1. Note #1:
   - North America: (Flow Control)
   - International: (Constant Flow)
2. Note #2:
   - North America: (Level Control)
   - International: (Constant Level)
3. Note #3:
   - (North America or International)
4. Note #4: Ramp Time
   - Slow, Medium or Fast for Level Control (Constant Level), or Constant Pressure/Flow Control (Constant Flow)

Table 31: Single Pump Control Setup Screens

54 Single Pump Control Setup				
Screen ID No.	**Screens**	**Selections**	**Parameters Setup Information**	**Screen Information**
60	Operating Mode CHANGING OPERATING MODE WILL OVERWRITE CURRENT SETUP! Single Pump Control		[19-01] = Disabled, [19-00] = [1] Process Control, [19-50] = [19-56] = [25-20] = [25-22] = 1, [0-24] = 1989, [0-21] = Frequency, [0-22] = Motor current, [0-23] = Feedback [Unit]. • (North America): [0-20] = Power [hp] • (International): [0-20] = Power [kW]	(Pump application type): • (Booster): continue to screen ID #61. • (HVAC): continue to screen ID #62.
61	Application Type Level Control	• North America – [Constant Pressure] – [Flow Control] – [Level Control] • International – [Constant Pressure] – [Constant Flow] – [Constant Level] Note: Level Control (Constant Level) is only available for Booster pump application mode.	• Level Control (Constant Level): [20-93] = 3s & [20-94] = 10s. • Flow Control (Constant Flow) & Constant Pressure: [20-93] = 5s and [20-94] = 3.3s.	• These application types are available for the Booster pump application. • Application Type: – Level Control (Constant Level): continue to screen ID #63. – Flow Control (Constant Flow): continue to screen ID #64. – Constant Pressure: continue to screen ID #65.

54 Single Pump Control Setup				
Screen ID No.	Screens	Selections	Parameters Setup Information	Screen Information
62	Application Type Constant Pressure	• North America – [Constant Pressure] – [Flow Control] • International – [Constant Pressure] – [Constant Flow]	• (Sensor): [20-93] = 5s; [20-94] = 3.3s. • (Sensorless): [20-03] = [20-06] = No Function; [20-20] = Minimum; [6-17] = Disabled; [20-13] = 0; [3-41] = [3-42] = 10s. – Constant Pressure: [20-00] = Sensorless Pressure; [20-02] = [20-12] = PSI; [20-60] = GPM; [6-15] = 300; [20-14] = 300 PSI. – Flow Control (Constant Flow): [20-00] = Sensorless Flow; [20-02] = [20-12] = GPM; [20-60] = PSI; [6-15] = 4000; [20-14] = 4000 GPM	• These application types are available for the HVAC pump application. • (Sensor): – Flow Control (Constant Flow): continue to screen ID #64. – Constant Pressure: continue to screen ID #65. • (Sensorless): – (Single Pump Control): continue to screen ID #68. – (Multipump Control): continue to the Multipump Setup Screens table.
63	Level control units ft	[ft] [in WG] [ft WG] [m] [m WG]	[20-02] = [20-05] = [20-08] = [20-12] = selection	Continue to screen ID #66.
64	Flow control units GPM	[GPM] [gal/s] [gal/min] [gal/h] [CFM] [ft^3/s] [ft^3/min] [ft^3/h] [m^3/h]	[20-02] = [20-05] = [20-08] = [20-12] = selection [20-81] = Normal (HVAC): [3-41] = [3-42] = 10s	• (Booster): continue to screen ID #67 • (HVAC): – If (Multipump Control): continue to the Multipump Setup Screens table. – Else: continue to screen ID #68.

54 Single Pump Control Setup				
Screen ID No.	Screens	Selections	Parameters Setup Information	Screen Information
65	Pressure control units psi	[psi] [lb/in^2] [in Hg] [mbar] [bar] [Pa] [kPa] [mm Hg]	See the above screen ID #64.	See the above screen ID #64.
66	Tank Fill or Tank Empty Application Fill	[Fill] [Empty]	• Fill: [20-81] = Normal • Empty: [20-81] = Inverse	See the above screen ID #64.
67	Ramp Time Fast	[Fast] [Medium] [Slow]	(North America): see *Table 29: Ramp Time values for North America Region* on page 131. (International): see *Table 30: Ramp Time values for International Region* on page 132.	• This screen is only available for Booster pump application type. • (North America): if (Multipump Control) then continue to the Multipump Setup Screens table, else continue to screen ID #69. • (International): continue to screen ID #68.
68	Regulation Band 20%	_____ %	[20-84] = entry	• If (Multipump Control): continue to the Multipump Setup Screens table. • Else: continue to screen ID #69. Note: only for International regional setting and Booster mode. See the Regulation Band description in *Single Pump Control setup* on page 131.

54 Single Pump Control Setup				
Screen ID No.	**Screens**	**Selections**	**Parameters Setup Information**	**Screen Information**
69	Would you like to Autoset the rest of the settings? No	[Yes] [No]		• Yes: continue to the Autoset Screens table. • No: continue to screen ID #70. – (Sensor): continue to screen ID #69. – (Sensorless): continue to screen ID #71.
70	Continue to the Feedback Setup? No	[Yes] [No]		• Yes: continue to the Feedback Setup Screens Table. • No: return to the Setup Selection screen ID #6 the Main Menu Screens table.
71	Continue to the setpoint Setup? Yes	[Yes] [No]		• Yes: continue to the Setpoint Setup Screens Table. • No: return to the Setup Selection screen ID #6 the Main Menu Screens table.

7.5.5.1 Autoset

The Autoset allows users to automatically configure the rest of the parameters to default settings. After the setpoint is configured, the setup of the controller for Sensor control in the Booster pump application, or Sensor/Sensorless control in HVAC pump application is complete.

NOTE: Setup 1 is the active setup for all applications.

The default configurations are described in the tables below.

Note that [unit] will reflect the control units selected previously.

Table 32: Autoset Configuration for Booster Pump Application (Sensor Control)

Autoset Configuration	**North America**			**International**		
	Constant Pressure	**Flow Control**	**Level Control**	**Constant Pressure**	**Constant Flow**	**Constant Level**
Transducer Type	4-20mA	4-20mA	4-20mA	4-20mA	4-20mA	4-20mA
[3-10.0] **Preset Reference**	2.5	2.5	2.5	2.5	2.5	2.5
[4–12] **Sleep Frequency/Low Limit [Hz]**	30 Hz	30 Hz	30 Hz	20Hz	20Hz	20Hz
[5–40.0] **Relay 1 Function**	MCO Controlled	MCO Controlled	MCO Controlled	No Alarm	No Alarm	No Alarm
[5–40.1] **Relay 2 Function**	MCO Controlled	MCO Controlled	MCO Controlled	Running	Running	Running

Autoset Configuration	North America			International		
	Constant Pressure	Flow Control	Level Control	Constant Pressure	Constant Flow	Constant Level
[6–15] **Terminal 53 High Ref./ Feedb.Value**	300 [unit]	4000 [unit]	300 [unit]	10 [unit]	100 [unit]	10 [unit]
[6–17] **Terminal 53 Sensor Fault (North America) / Live Zero (International)**	Disabled	Disabled	Disabled	Disabled	Disabled	Disabled
[6–27] **Terminal 54 Sensor Fault (North America) / Live Zero (International)**	Disabled	Disabled	Disabled	Disabled	Disabled	Disabled
[13-20.0] **SL Controller Timer**	10 Min	10 Min	10 Min	30 secs	30 secs	30 secs
[14-20] **Reset Mode**	Manual Reset	Manual Reset	Manual Reset	Manual Reset	Manual Reset	Manual Reset
[19-10] **Pump Exercise Idle Time**	0	0	0	100	100	100
[19-11] **Pump Exercise Run Time**	NA	NA	NA	10	10	10
[19-12] **Flow Compensation**	Disabled	Disabled	Disabled	Disabled	Disabled	Disabled
[19–20] **No Water Loss of Prime Fault**	Alarm	Alarm	Alarm	Disabled	Disabled	Disabled
[19–21] **No Water Loss of Prime Protection Delay**	60	60	60	60	60	60
[19–22] **No Water Loss of Prime Restart Time**	10 min.	10 min.	10 min.	10 min.	10 min.	10 min.
[19–23] **No Water Loss of Prime Restart Attempt**	3	3	3	3	3	3
[19-24] **No Flow Shutdown**	Enabled	Disabled	Enabled	Enabled	Disabled	Enabled
[19–25] **No Flow Restart Difference**	10	10	10	NA	NA	NA
[19-26] **High System Fault**	Disabled	Disabled	Disabled	Disabled	Disabled	Disabled
[19-27] **High System Limit**	100	100	100	10	100	10
[19-28] **High System Delay**	3	3	3	3	3	3
[19-32] **Low Suction Fault**	Disabled	Disabled	Disabled	Disabled	Disabled	Disabled
[19-36] **High Suction Fault**	Disabled	Disabled	Disabled	Disabled	Disabled	Disabled
[19-40] **All Zones Failure Function**	Stop	Stop	Stop	Stop and Trip	Stop and Trip	Stop and Trip
[19-45] **Low System Fault**	Disabled	Disabled	Disabled	Disabled	Disabled	Disabled

Autoset Configuration	North America			International		
	Constant Pressure	Flow Control	Level Control	Constant Pressure	Constant Flow	Constant Level
[19-51] **Standby Pumps**	0	0	0	0	0	0
[19-68] **Relay 1 Function**	System Alarm or Warning	System Alarm or Warning	System Alarm or Warning	NA	NA	NA
[19-69] **Relay 2 Function**	System Running	System Running	System Running	NA	NA	NA
[19-90] **Pipe Fill Function**	Disabled	Disabled	Disabled	Disabled	Disabled	Disabled
[19-92] **Speed Step**	10	10	10	10	10	10
[19-93] **Steady Time**	10	10	10	10	10	10
[19-94] **Dead Band**	5	5	5	1	1	1
[19-95] **Pipe Fill Max Pump**	1	1	1	1	1	1
[19-97] **Priming Delay**	NA	NA	NA	0	0	0
[20–00] **Feedback 1 Source**	AI 53	AI 53	AI 53	AI 53	AI 53	AI 53
[20–03] **Feedback 2 Source**	No function	No function	No function	No function	No function	No function
[20–06] **Feedback 3 Source**	No function	No function	No function	No function	No function	No function
[20-14] **Maximum Reference/Feedb.**	300 [unit]	4000 [unit]	300 [unit]	10 [unit]	100 [unit]	10 [unit]
[22-21] **Low Power Detection**	Enabled	Enabled	Enabled	Disabled	Disabled	Disabled
[22-40] **Minimum Run Time**	1	1	1	1	1	1
[22-41] **Minimum Sleep Time**	1	1	1	1	1	1
[22-50] **End of Curve Function**	Off	Off	Off	Off	Off	Off
[22-52] **End of Curve Tolerance**	20	20	20	20	20	20
[22–33] **Low Speed [Hz]**	[4-14] * 0.5 in Setup 1					
[22–37] **High Speed [Hz]**	[4-14] * 0.85 in Setup 1					
[22-39] **No Water/ Loss of Prime Limit [HP]**	[1-21] * [4-18] * 0.46 in Setup 1					
[22–35] **Low Speed Power [HP]**	[22-39] * ([22-33] / [4-14])^3 in Setup 1					

Table 33: Autoset Configuration for HVAC Pump Application (Sensor and Sensorless Control)

Autoset Configuration	North America				International			
	Sensor		Sensorless		Sensor		Sensorless	
	Constant Pressure	Flow Control	Constant Pressure	Flow Control	Constant Pressure	Constant Flow	Constant Pressure	Constant Flow
Transducer Type	4-20mA	4-20mA	Sensorless Control	Sensorless Control	4-20mA	4-20mA	Sensorless Control	Sensorless Control
[4–12] **Sleep Frequency/Low Limit [Hz]**	18 Hz	18 Hz	24 Hz	24 Hz	30 Hz	30 Hz	30 Hz	30 Hz
[5–40.0] **Relay 1 Function**	MCO Controlled	MCO Controlled	MCO Controlled	MCO Controlled	No Alarm	No Alarm	No Alarm	No Alarm
[5–40.1] **Relay 2 Function**	MCO Controlled	MCO Controlled	MCO Controlled	MCO Controlled	Running	Running	Running	Running
[6–15] **Terminal 53 High Ref./ Feedb.Value**	300 [unit]	4000 [unit]	36 [unit]	4000 [unit]	10 [unit]	100 [unit]	10 [unit]	100 [unit]
[6–17] **Terminal 53 Sensor Fault (North America) / Live Zero (International)**	Disabled	Disabled	Disabled	Disabled	Disabled	Disabled	Disabled	Disabled
[6–27] **Terminal 54 Sensor Fault (North America) / Live Zero (International)**	Disabled	Disabled	Disabled	Disabled	Disabled	Disabled	Disabled	Disabled
[14-20] **Reset Mode**	Manual Reset	Manual Reset	Automatic Reset x 3	Automatic Reset x 3	Manual Reset	Manual Reset	Automatic Reset x 3	Automatic Reset x 3
[19-10] **Pump Exercise Idle Time**	0	0	0	0	100	100	100	100
[19-11] **Pump Exercise Run Time**	NA	NA	NA	NA	10	10	10	10
[19-12] **Flow Compensation**	Disabled	Disabled	Disabled	Disabled	Disabled	Disabled	Disabled	Disabled
[19–20] **No Water Loss of Prime Fault**	Disabled	Disabled	Disabled	Disabled	Disabled	Disabled	Disabled	Disabled
[19-24] **No Flow Shutdown**	Disabled	Disabled	Disabled	Disabled	Disabled	Disabled	Disabled	Disabled
[19-26] **High System Fault**	Disabled	Disabled	Disabled	Disabled	Disabled	Disabled	Disabled	Disabled
[19-27] **High System Limit**	100	100	100	100	10	100	10	100
[19-28] **High System Delay**	3	3	3	3	3	3	3	3

Autoset Configuration	North America				International			
	Sensor		Sensorless		Sensor		Sensorless	
	Constant Pressure	Flow Control	Constant Pressure	Flow Control	Constant Pressure	Constant Flow	Constant Pressure	Constant Flow
[19-32] **Low Suction Fault**	Disabled	Disabled	Disabled	Disabled	Disabled	Disabled	Disabled	Disabled
[19-36] **High Suction Fault**	Disabled	Disabled	Disabled	Disabled	Disabled	Disabled	Disabled	Disabled
[19-40] **All Zones Failure Function**	Stop	Stop	Stop	Stop	Stop	Stop	Stop	Stop
[19-45] **Low System Fault**	Disabled	Disabled	Disabled	Disabled	Disabled	Disabled	Disabled	Disabled
[19-51] **Standby Pumps**	0	0	0	0	0	0	0	0
[19-68] **Relay 1 Function**	System Alarm or Warning	System Alarm or Warning	System Alarm or Warning	System Alarm or Warning	NA	NA	NA	NA
[19-69] **Relay 2 Function**	System Running	System Running	System Running	System Running	NA	NA	NA	NA
[19-72] **EOC Staging Function**	Disabled	Disabled	Disabled	Disabled	Disabled	Disabled	Disabled	Disabled
[19-90] **Pipe Fill Function**	Disabled	Disabled	Disabled	Disabled	Disabled	Disabled	Disabled	Disabled
[19-92] **Speed Step**	10	10	10	10	10	10	10	10
[19-93] **Steady Time**	10	10	10	10	10	10	10	10
[19-94] **Dead Band**	5	5	5	5	1	1	1	1
[19-95] **Pipe Fill Max Pump**	1	1	1	1	1	1	1	1
[19-97] **Priming Delay**	NA	NA	NA	NA	0	0	0	0
[20–00] **Feedback 1 Source**	AI 53	AI 53	Sensorless Pressure	Sensorless Flow	AI 53	AI 53	Sensorless Pressure	Sensorless Flow
[20–03] **Feedback 2 Source**	No function	No function	No function	No function	No function	No function	No function	No function
[20–06] **Feedback 3 Source**	No function	No function	No function	No function	No function	No function	No function	No function
[20-14] **Maximum Reference/ Feedb.**	300 [unit]	4000 [unit]	300 [unit]	4000 [unit]	10 [unit]	100 [unit]	10 [unit]	100 [unit]
[22-21] **Low Power Detection**	Enabled	Enabled	Enabled	Enabled	Disabled	Disabled	Disabled	Disabled
[22-50] **End of Curve Function**	Off	Off	Off	Off	Off	Off	Off	Off

Autoset Configuration	North America				International			
	Sensor		Sensorless		Sensor		Sensorless	
	Constant Pressure	Flow Control	Constant Pressure	Flow Control	Constant Pressure	Constant Flow	Constant Pressure	Constant Flow
[22-52] End of Curve Tolerance	20	20	20	20	20	20	20	20

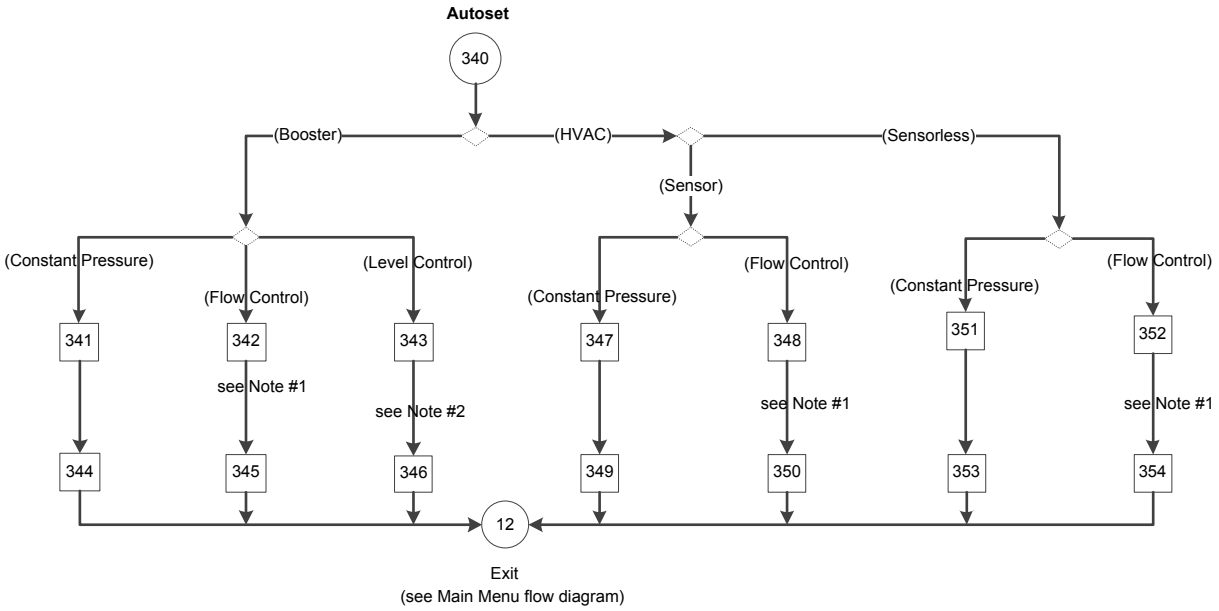

Figure 96: Autoset Flow Diagram

Notes:

1. Note #1:
   - North America: (Flow Control)
   - International: (Constant Flow)
2. Note #2:
   - North America: (Level Control)
   - International: (Constant Level)

Table 34: Autoset Screens

340 Autoset				
Screen ID No.	Screens	Selections	Parameters Setup Information	Screen Information
				• (Booster) : – (Constant Pressure): continue to screen ID #341. – (Flow Control or Constant Flow): continue to screen ID #342. – (Level Control or Constant Level): continue to screen ID #343. • (HVAC): – (Sensor) – (Constant Pressure): continue to screen ID #347. – (Flow Control or Constant Flow): continue to screen ID #348. – (Sensorless) – (Constant Pressure): continue to screen ID #351. – (Flow Control or Constant Flow): continue to screen ID #352.

340 Autoset				
Screen ID No.	Screens	Selections	Parameters Setup Information	Screen Information
341, 342, 343, 347, 348, 351, 352	Setpoint 1 15.000psi	_____ [unit]		• Screen ID #341: – continue to screen ID #344. • Screen ID #342: – continue to screen ID #345 • Screen ID #343: – continue to screen ID #346 • Screen ID #347: – continue to screen ID #349 • Screen ID #348: – continue to screen ID #350 • Screen ID #351: – continue to screen ID #353 • Screen ID #352 – continue to screen ID #354
344	North America: Constant Pressure with 300 [unit], 4-20mA sensor on AI 53, Sleep Frequency = 30Hz, Restart Difference = 10 [unit], No Water/Loss of Prime fault is enabled, Restart Time = 10 mins. International: See Notes below the table	[OK]	See the Constant Pressure parameters setup information for North America or International in *Table 32: Autoset Configuration for Booster Pump Application (Sensor Control)* on page 138.	OK: continue to Exit in the Main Menu Screen table.
345	North America: Flow Control with 4000 [unit], 4-20mA sensor on AI 53, Sleep Mode = Disabled, No Water/Loss of Prime fault is enabled, Restart Time = 10 mins. International: See Notes below the table	[OK]	See the Flow Control (North America) or Constant Flow (International) parameters setup information in*Table 32: Autoset Configuration for Booster Pump Application (Sensor Control)* on page 138.	OK: continue to Exit in the Main Menu Screen table.
346	North America: Level Control with 300 [unit], 4-20mA sensor on AI 53, Sleep Frequency = 30Hz, Restart Difference = 10 [unit], No Water/Loss of Prime fault is enabled, Restart Time = 10 mins. International: See Notes below the table	[OK]	See the Level Control (North America) or Constant Level (International) parameters setup information in *Table 32: Autoset Configuration for Booster Pump Application (Sensor Control)* on page 138.	OK: continue to Exit in the Main Menu Screen table.

340 Autoset				
Screen ID No.	Screens	Selections	Parameters Setup Information	Screen Information
349	North America: Constant Pressure with 36 [unit], 4-20mA sensor on AI 53, Sleep Mode = Disabled,No Water/Loss of Prime fault is disabled[OK] International: See Notes below the table	[OK]	See the Constant Pressure parameters setup information for Sensor Control, North America or International in *Table 33: Autoset Configuration for HVAC Pump Application (Sensor and Sensorless Control)* on page 141.	OK: continue to Exit in the Main Menu Screen table.
350	North America: Flow Control with 4000 [unit],4-20mA sensor on AI 53, Sleep Mode = Disabled, No Water/Loss of Prime fault is disabled.[OK] International: See Notes below the table	[OK]	See the Flow Control (North America) or Constant Flow (International) parameters setup information for Sensor Control in *Table 33: Autoset Configuration for HVAC Pump Application (Sensor and Sensorless Control)* on page 141.	OK: continue to Exit in the Main Menu Screen table.
353	North America: Constant Pressure with 300 [unit],sensorless Control in closed loop application[OK] International: See Notes below the table	[OK]	See the Constant Pressure parameters setup information for , Sensorless Control, North America or International in *Table 33: Autoset Configuration for HVAC Pump Application (Sensor and Sensorless Control)* on page 141.	OK: continue to Exit in the Main Menu Screen table.
354	North America: Flow Control with 4000 [unit],sensorless Control in closed loop application. [OK] International: See Notes below the table	[OK]	See the Flow Control (North America) or Constant Flow (International), parameters setup information for Sensorless Control in *Table 33: Autoset Configuration for HVAC Pump Application (Sensor and Sensorless Control)* on page 141.	OK: continue to Exit in the Main Menu Screen table.

Notes:

Screens #344, #349 and #353 will be displayed as below:

Constant Pressure Default
Values Loaded
(See IOM)
[OK]

Screens #345, #350 and #354 will be displayed as below:

Constant Flow Default
Values Loaded (See IOM).
[OK]

Screen #346 will be displayed as below:

Constant Level Default
Values Loaded (See IOM).
[OK]

7.5.6 Multipump Control setup

The Multipump Control configures the controllers for operation in a system with up to four pumps via [19-01] **Multi-pump Control** with the following modes:

- [0] Disabled – Multi-pump control is disabled. Drive will assume single pump functionality.
- [1] Fixed Spd Follower (Fixed Speed Follower): only one controller with an MCO301 Programmable API option card is required. Run relays are required for the other follower pumps to run at full speed.
  - Note: a MCB101 General Purpose I/O board is required. See *Fixed Speed Follower wiring* on page 88.
- [2] Fixed Master Synch (Fixed Master Synchronous): only the fixed master controller requires an MCO301 Programmable API option card. The fixed master controller runs its pump at a variable speed and the other active follower pumps at the same speed of the master pump. The Fix Master Synch setup is only available for the North America regional setting.
- [3] Fixed Master MulCtl (Fixed Master Multicontrol): only the fixed master controller requires an MCO301 Programmable API option card. The fixed master controller runs the last staged pump at a variable speed and the other active follower pumps at full speed. The Fix Master MulCtl setup is only available for the North America regional setting.
- [4] Multi Master Synch (Multi Master Synchronous): MCO301 Programmable API option cards are required for all controllers. Any controller can take control as a master that runs the master pump at a variable speed and the other active follower pumps at the speed of the master.
- [5] Multi Master MulCtl (Multi-Master Multicontrol): MCO301 Programmable API option cards are required for all controllers. Any controller can take control as a master that runs the lastly staged pump at a variable speed and the other active follower pumps at full speed.

Ramp time values: see *Table 29: Ramp Time values for North America Region* on page 131 for North America region, and *Table 30: Ramp Time values for International Region* on page 132 and Ramps Control description in*Single Pump Control setup* on page 131.

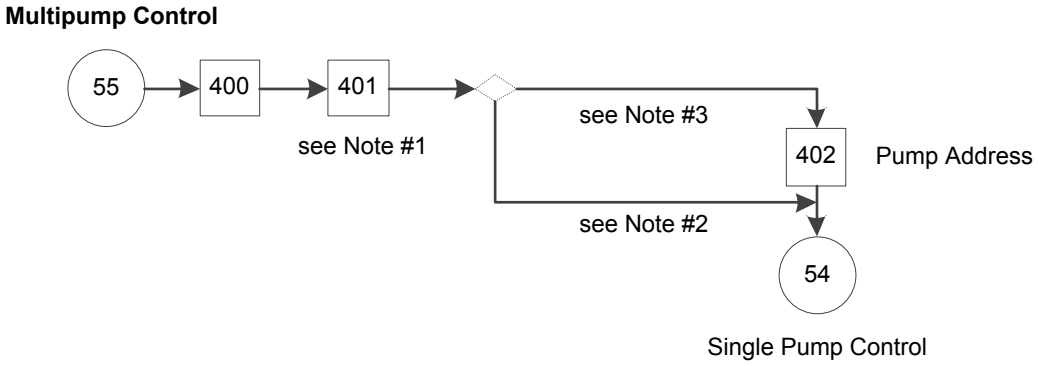

Figure 97: Multipump Control Flow Diagram

Multi Control flow diagram notes:

Note #1:

- (North America):
  - Fixed Spd Follower
  - Fixed Master Synch
  - Fixed Master MulCtl
  - Multi Master Synch
  - Multi Master MulCtl
- (International):
  - Fixed Spd Follower
  - Multi Master Synch
  - Multi Master MulCtl

Note #2:

- (Fixed Speed Follower)
- (Fixed Master Synch)
- (Fixed Master MulCtrl)

Note #3:

- (Multi Master Synch)
- (Multi Master MulCtrl)

Table 35: Multipump Control Screens

55 Multi-pump Control				
400	Operating Mode CHANGING OPERATING MODE WILL OVERWRITE CURRENT SETUP! Multipump Control			Continue to screen ID #401.

55 Multi-pump Control				
401	Multi-pump Control Fixed Speed Follower	North America: [Fixed Spd Follower] [Fixed Master Synch] [Fixed Master MulCtl] [Multi Master Synch] [Multi Master MulCtl] International: [Fixed Spd Follower] [Multi Master Synch] [Multi Master MulCtl]	[19-00] = [1] Process Control , [0-20] = 1989, [0-21] = Frequency, [0-22] Motor current, [0-23] = Feedback [Unit]. • If [19-01] = Fixed Spd Follower: [0-24] = 1989, [25-21] = 100, If (North America): [0-20] = Power [hp] or else if (International): [0-20] = Power [kW]. • Else: [0-20] = 1989. • If [19-01] ≠ Multi Master Sync/Multi Master MltCtl: [19-56] = 1.	• If [19-01] = Multi Master Synch or Multi Master MltCtl: continue to screen ID #402. • Else: continue to screen ID #60 in the Single Pump Control Screens table.
402	Pump Address 1	_____	[19-56] = entry.	Continue to screen ID #60 in the Single Pump Control Screens table.

7.5.6.1 Fixed Speed Follower

The Fixed Speed Follower multipump-controlled mode supports up to four-pumps in parallel operation. The MCO301 option A card and the General Purpose I/O option B card are required for the controller pump. A separated panel for run relays is required for the follower pumps. Refer to the *Fixed Speed Follower wiring* on page 88 (option A only) for details on wiring and connections.

In the Fixed Speed Follower mode, the master pump controller can run its pump at a variable speed and alternate up to three fixed-speed pumps through the separated run relays. The master controller speed is varied to maintain a set point. It supports up to two standby pumps. Selection between motors is made automatically by the master controller.

Note: Sensorless control cannot be applied in Fixed Speed Follower mode.

7.5.6.2 Fixed Master Synchronous

The Fixed Master Synchronous multipump-controlled mode supports up to four pumps parallel operation with one master and up to three lag pumps to run at variable speed. An MCO301 Programmable API option A or B card is required for the master controller. The RS-485 port of MCO301 is connected to the FC port of all connected follower controllers. Refer to the *Fixed Master Synchronous or Fixed Master Multi Control Option A wiring* on page 89 or *Fixed Master Synchronous or Fixed Master Multi Control Option B wiring* on page 91 for wiring and connections.

In the Fixed-Master mode of operation, the master controller is fixed, and has default address 1 in [19-56] and can control the staging/destaging and speed of all connected lag-pumps. Each lag pump must have a unique address ranging from 2 to 4 depending on the number of pumps for satisfactory operation. In Fixed Master Synchronous mode of operation, all staged pumps will be running on the same speed to achieve the set-point. The following parameter values in the lag pump controllers must be set as below.

- [1-00] **Configuration Mode** = Open (Note: Master is always set at Open)
- [8-01] **Control Site** = Digital & Ctrl Word
- [8-30] **Protocol** = FC
- [8-31] **Address** = within 2 – 4
- [8-32] **Baud Rate** = 115200
- [8-33] **Parity / Stop Bits**= Even Parity, 1 Stop bit

Number of pumps [19-50] in master controller	Advance master Controller-1 [8-31]	Basic Controller-1 address [8-31]	Basic Controller-2 address [8-31]	Basic Controller-3 address [8-31]
2	1	2	NA	NA
3	1	2	3	NA
4	1	2	3	4

The lag pump address at [8-31] must be within 2-4 with different values for all controllers. For example, for two-pump system the lag pump controller address should be 2, for three-pump system the lag pump controller addresses should be 2 and 3 respectively, and for four-pump system the lag pump controller addresses should be 2, 3 and 4 respectively.

NOTE: System and suction pressure transducer and Digital input output for protection must be connected to the Master controller (controller with MCO301 connected).

7.5.6.3 Fixed Master Multi Control

The Fixed Master Multi Control multipump-controlled mode supports up to four pumps in parallel operation with one master and up to three lag pumps to run at variable speed. An MCO301 Programmable API option A or B card is required for the master controller. The RS-485 port of MCO301 is connected with FC port of all connected follower controllers. Refer to the *Fixed Master Synchronous or Fixed Master Multi Control Option A wiring* on page 89 or *Fixed Master Synchronous or Fixed Master Multi Control Option B wiring* on page 91 for wiring and connections.

In the Fixed-Master mode of operation, the master controller is fixed, has default address 1 in [19-56] and can control the staging/destaging and speed of all connected lag-pumps. Each lag pump must have unique address ranging from 2 to 4 depend on number of pumps for satisfactory operation. In Fixed Master Multi Control mode of operation, the master controller will vary the speed of the last staged pump to achieve the set-point while all other staged pumps are running on maximum speed.

The following parameter values in lag pump controller must be set as below.

- [1-00] **Configuration Mode** = Open (Note: Master is always set at Open)
- [8-01] **Control Site** = Digital & Ctrl Word
- [8-30] **Protocol** = FC
- [8-31] **Address** = within 2 – 4
- [8-32] **Baud Rate** = 115200
- [8-33] **Parity / Stop Bits** = Even Parity, 1 Stop bit

Number of pumps [19-50] in master controller	Advance Controller-1 [8-31]	Basic Controller-1 address [8-31]	Basic Controller-2 address [8-31]	Basic Controller-3 address [8-31]
2	1	2	NA	NA
3	1	2	3	NA
4	1	2	3	4

The lag pump address [8-31] must be within 2-4 with different values for all controllers. For example for two-pump system the lag pump controller address should be 2, for three-pump system the lag pump controller addresses should be 2 and 3 respectively, and for four-pump system the lag pump controller addresses should be 2, 3 and 4 respectively.

NOTE: System and suction pressure transducer and Digital input output for protection must be connected to Master controller (controller with MCO301 connected)

7.5.6.4 Multi Master Synchronous

The Multi Master Synchronous multipump-controlled mode supports up to four pumps in parallel operation. In Multi-Master operation, all controllers can work as the master controller. Upon failure of any working master the next pump in the sequence takes over as the master and the system keeps running until the last healthy pump plus controller are in system. An MCO301 Programmable API option A or B card is required for each controller. The MCO301 RS-485 port of all controllers is connected in daisy chain. Refer to the *Multi Master Synchronous or Multi Master Multi Control Option A wiring* on page 90 or *Multi Master Synchronous or Multi Master Multi Control Option B wiring* on page 91 for wiring and connections.

In Multi-Master mode of operation, the master controller controls the staging/destaging and speed of all connected lag pumps. Each controller must have a unique address ranging from 1 to 4 depending on the number of pumps for satisfactory operation. In Multi Master Synchronous mode of operation all staged pumps will be running on the same speed to achieve the set-point.

WARNING:

If the system is required to be completely stopped during the operation, all pumps in the system are required to put in the Off mode by pressing the Off key (Off LED will be On) for stopping all pumps. Without doing so, any pump that is stopping but still in the Auto On mode (Auto On LED is On) may start or re-start running at any time due to the specific Multi Master Synchronous operation.

The following parameter value in lag pump controller must be set as below.

- [19–56] **Pump Address** = within 2 – 4

Number of pumps [19-50] in master controller	Advance Controller-1 [19–56]	Advance Controller-2 address [19–56]	Advance Controller-3 address [19–56]	Advance Controller-4 address [19–56]
2	1	2	NA	NA
3	1	2	3	NA
4	1	2	3	4

All controller address ([19-56]) must be within 2-4 with different values for all controllers. For example for two-pump system the lag pump controller address should be 2, for three-pump system the lag pump controller addresses should be 2 and 3 respectively, and for four-pumps system the lag pump controller addresses should be 2, 3 and 4 respectively.

NOTE: System & suction pressure transducer and Digital input output for protection must be connected to all controllers.

7.5.6.5 Multi Master Multi Control

Advanced Multi Master Multi Control is an embedded pump control mode of operation, and supports up to four pumps in parallel operation. In Multi-Master operation all controllers can work as a master controller. Upon failure of any working master. The next pump in sequence will take up as the master and the system keeps running until the last healthy pump in the system. An MCO301 Programmable API option A or B card is required for each controller. The MCO301 RS-485 port of all controllers is connected in daisy chain. Refer to the *Multi Master Synchronous or Multi Master Multi Control Option A wiring* on page 90 or *Multi Master Synchronous or Multi Master Multi Control Option B wiring* on page 91 for wiring and connections.

In Multi-Master mode of operation, the master controller controls the staging/destaging and speed of all connected lag-pumps. Each controller must have unique address ranging from 1 to 4 depending on number of pumps for satisfactory operation. In Multi Master

Multi Control mode of operation, the last staged pump will be running on variable speed to achieve the set-point while all other staged pumps are running on maximum speed.

WARNING:

If the system is required to be completely stopped during the operation, all pumps in the system are required to put in the Off mode by pressing the Off key (Off LED will be On) for stopping all pumps. Without doing so, any pump that is stopping but still in the Auto On mode (Auto On LED is On) may start or re-start running at any time due to the specific Multi Master Multi Control operation.

The following parameter value in lag pump controllers must be set as below.

- [19-56] **Pump Address** = within 2 – 4

Number of pumps [19-50] in master controller	Advance Controller-1 address [19-56]	Advance Controller-2 address [19-56]	Advance Controller-3 address [19-56]	Advance Controller-4 address [19-56]
2	1	2	NA	NA
3	1	2	3	NA
4	1	2	3	4

All lag pump controller addresses ([19-56]) must be within 2-4 with different values for all controllers. For example for two-pumps system the lag pump controller address should be 2, for three- pump system the lag pump controller addresses should be 2 and 3 respectively, and for four-pump system the lag pump controller addresses should be 2, 3 and 4 respectively.

NOTE: System and suction pressure transducer and Digital input output for protection must be connected to all controllers.

7.5.7 Speed Control setup

Speed Control Mode allows the speed to be controlled by an external device such as a PLC or BMS. A start signal on DI 18 is required to start and stop the pump.

To configure Speed Control mode first select the speed reference source. Select the speed reference source as either an analog input or Fieldbus Reference. When using the analog inputs be sure to set the analog input configuration switches to the appropriate feedback type switch A54 which can be configured to both voltage type or current type. Refer to the Analog input configuration in the Control terminal connections section for details on setting the analog input configuration switches. Refer to the Common Terminal Wiring Configurations section in this manual for detail on wiring external devices to the analog inputs.

Next set the minimum and maximum reference/feedback values. The [6-14] **Terminal 53 Low Ref./Feedb.Value** is the speed value that corresponds with the low current (0 or 4mA for current references) or low voltage (0V for voltage references) that will be applied to the analog input. The [6–15] **Terminal 53 High Ref./Feedb.Value** is the speed value that corresponds with the high current (20mA for current references) or high voltage (AI 54 is required to configure to voltage type for 10V voltage references) that will be applied to the analog input. For example, if the application uses a 4-20 mA reference signal on AI 53 and the pump is required to operate from 30Hz to 60Hz, set [6-14] **Terminal 53 Low Ref./Feedb.Value** to 30 and [6–15]**Terminal 53 High Ref./Feedb.Value** to 60.

The minimum and maximum speed reference values are set next. These values are the minimum and maximum speed settings for the application. These settings will limit the controllable speed range of the pump. The speed range will be limited to the [3–02] **Minimum Reference** as the low speed limit and [3–03] **Maximum Reference** as the high speed limit. Using the example above, set the [3–02] **Minimum Reference** to 30Hz and the [3–03] **Maximum Reference** to 60Hz.

Note: The Reference/Feedback and Speed Reference values may be displayed incorrectly in the Speed Control mode due to the values that were changed in the other modes.

Update and verify the Reference/Feedback and Speed Reference values on the screen before proceeding to the next screen.

Speed Control

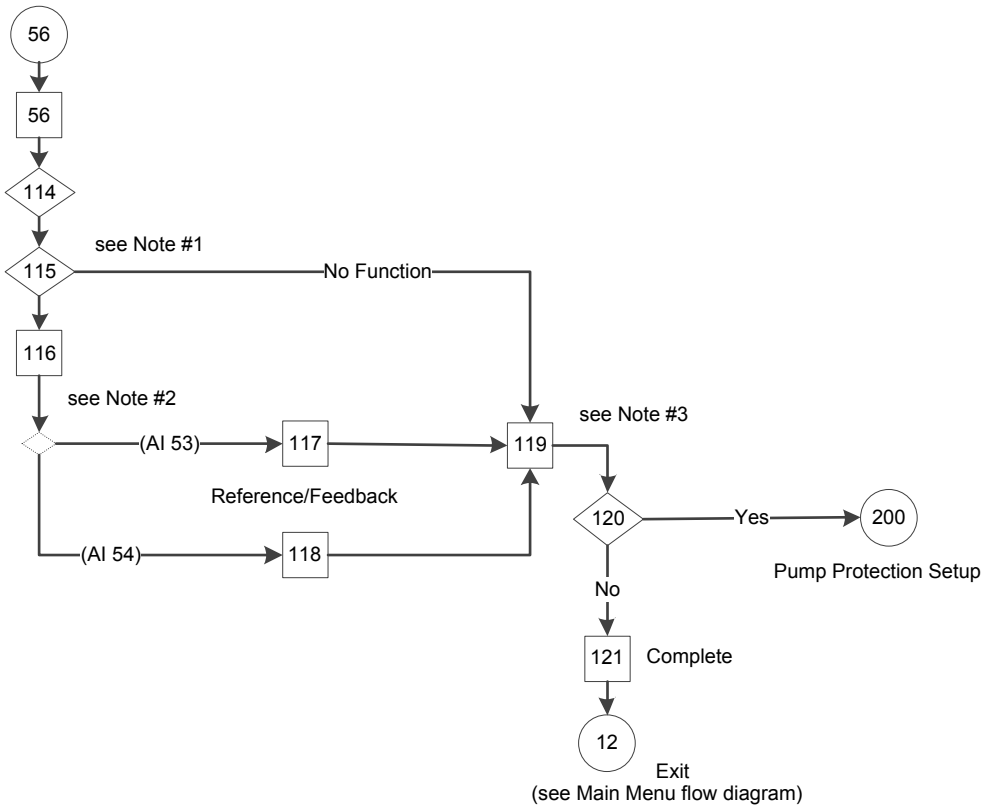

Figure 98: Speed Control Setup Flow Diagram

Speed Control Setup flow diagram notes:

- Note #1: Speed Reference Source selection screen.
- Note #2: AI 53 or AI 54 was selected condition.
- Note #3: Min/Max Speed Reference dual parameter screen.

Table 36: Speed Control Setup Screens

56 Speed Control Setup				
Screen ID No.	Screens	Selections	Parameters Setup Information	Screen Information
56	Operating Mode CHANGING OPERATING MODE WILL OVERWRITE CURRENT SETUP! Speed Control			• Speed Control Mode allows the speed to be controlled by an external device. • Continue to screen ID #114.
114	Speed control allows the speed to be controlled by an external source. A Start Signal on DI 18 is needed to start and stop the pump.	[OK]		Continue to screen ID #115.

56 Speed Control Setup				
Screen ID No.	Screens	Selections	Parameters Setup Information	Screen Information
115	Speed Reference Source No Function	[No function] [Analog Input 53] [Analog Input 54] [Fieldbus Reference]	[3-15]=[20-00]=selectio n (=No Function if Fieldbus Reference was selected), [0-20]=Power [hp], [0-21]=MotorCurrent, [0-22]=Power [kw], [0-23]=Frequency, [0-24]=Reference [%], [3-16]=[3-17]= No function, [3-10] (all)=0, [5-10]=Start, [13-90.9]=False, [19-00]=[0] External Reference, [19-40]=Off.	• No Function & Fieldbus Reference: continue to screen ID #119. • Others: continue to screen ID #116.
116	Be sure to configure the DIP switch 54 under the keypad to match the feedback type. Set I for current (mA) and U for voltage feedback. Do NOT change DIP switch position while drive is powered up.	[OK]		• AI 53 feedback: continue to screen ID #117. • AI 54 feedback: continue to screen ID #118.
117	Terminal 53 Low Ref./-Feedb.Value 0.000 Terminal 53 High Ref./-Feedb.Value 60.000	_____ _____	[6-14] = first entry. [6-15] = second entry. [6-17] = Disabled.	Continue to screen ID #119.
118	Terminal 54 Low Ref./-Feedb.Value 0.000 Terminal 54 High Ref./-Feedb.Value 60.000	_____ _____	[6-24] = first entry. [6-25] = second entry. [6-27] = Disabled.	Continue to screen ID #119.
119	Min Speed Reference 0.000Hz Max Speed Reference 60.000Hz	_____Hz _____Hz	[3-02] = first entry [3-03] = second entry [0-20] = Power [hp] [0-21] = Motor current [0-22] = Power [kW] [0-23] = Frequency [0-24] = Reference [Unit] [3-04] = External/Preset	Continue to screen ID #120.

56 Speed Control Setup				
Screen ID No.	Screens	Selections	Parameters Setup Information	Screen Information
120	Continue to Pump Protection Setup? Yes	[Yes] [No]		• Yes: continue to the Pump Protection Setup Screens table. • No: continue to screen ID #121.
121	Speed control mode has been configured. [OK]	[OK]		OK: continue to Exit in the Main Menu Screens table.

7.5.8 Follower Control setup

The Follower Control setup allows the IPC to be controlled by an external device such as another master IPC or a PLC. A start or stop signal will be provided through the communication protocol. This setup is only available for the North America regional setting.

- IPC Follower Control: Up to three IPCs are operated as Fixed Master Followers. Another IPC is required to configure as Fixed Master Synchronous or Fixed Master Multi Control mode for the master. The MCO301 Programmable API option A or B cards are required for the master and all followers. The MCO301 RS-485 port of the master is connected to the FC port of all connected follower controllers. Refer to the *Fixed Master Synchronous or Fixed Master Multi Control Option A wiring* on page 89 or *Fixed Master Synchronous or Fixed Master Multi Control Option B wiring* on page 91 for wiring and connections.

The following parameter values in the follower controllers are automatically set after configuring as below.

[1-00] **Configuration Mode** = Open

[8-01] **Control Site** = Digital & Ctrl Word

[8-30] **Protocol** = FC

[8-31] **Address** = within 2 – 4

[8-32] **Baud Rate** = 115200

[8-33] **Parity / Stop Bits** = Even Parity, 1 Stop bit

[19-50] Number of Pumps in master controller (configured as Fixed Master Synchronous or Fixed Master Multi Control mode)	Advanced master Controller-1 [8-31]	Advanced follower Controller-2 [8-31]	Advanced follower Controller-3 [8-31]	Advanced follower Controller-4 [8-31]
2	1	2	NA	NA
3	1	2	3	NA
4	1	2	3	4

All follower address ([8-31]) must be within 2-4 with different values for all follower controllers. Minimum and Maximum Reference are required to set for speed.

- PLC Follower Control: Up to three IPCs can be operated as PLC Followers. A PLC that can communicate and control the IPCs is required. The MCO301 Programmable API option A or B cards are required for all followers. The RS-485 port of the PLC is connected to the FC port of all connected follower controllers. See the below PLC Follower Control wiring diagram.

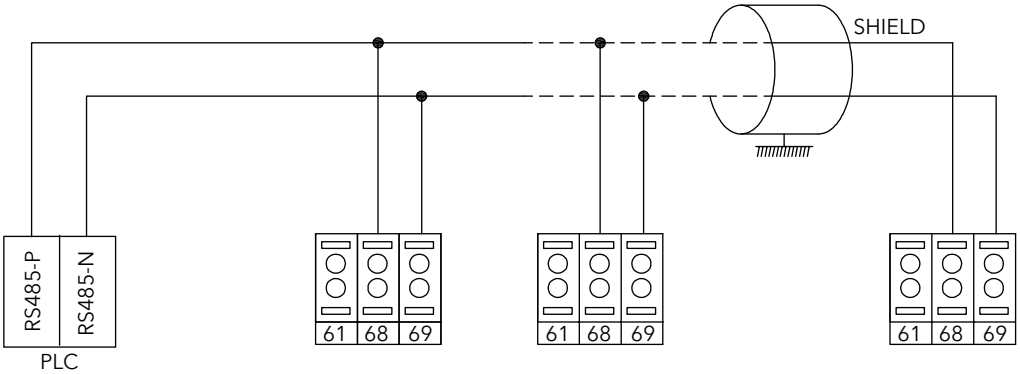

Figure 99: PLC Follower Control wiring diagram

The following parameter values in the follower controllers are automatically set after configuring as below.

[1-00] **Configuration Mode** = Open

[8-01] **Control Site** = Digital & Ctrl Word

[8-30] **Protocol** = Modbus RTU

[8-31] **Address** = within 1 – 3

[8-32] **Baud Rate** = 9600

[8-33] **Parity / Stop Bits** = No Parity, 1 Stop bit

Advanced follower Controller-1 [8-31]	Advanced follower Controller-2 [8-31]	Advanced follower Controller-3 [8-31]
1	NA	NA
1	2	NA
1	2	3

All follower address ([8-31]) must be within 1-3 with different values for all follower controllers.

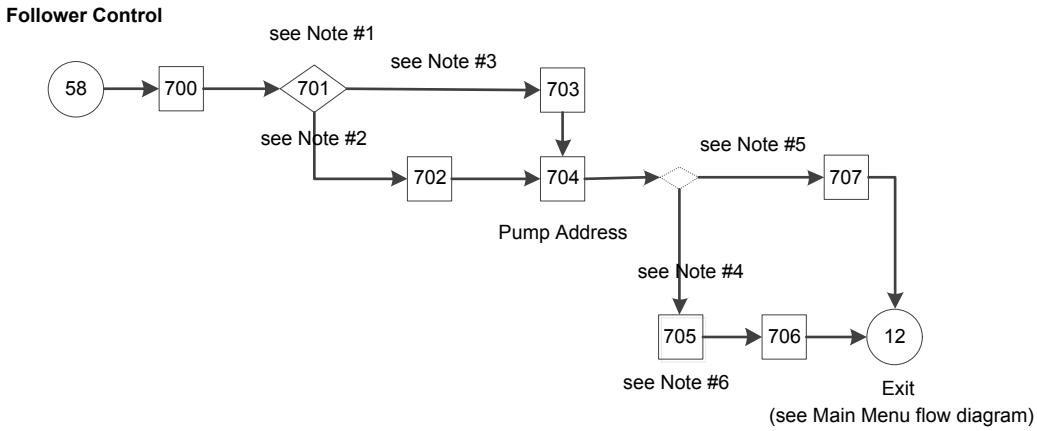

Figure 100: Follower Control Flow Diagram

Follower Control flow diagram notes:

- Note #1: Mode of Operation
- Note #2: IPC Follower Control
- Note #3: PLC Follower Control
- Note #4: (IPC Follower Control)
- Note #5: (PLC Follower Control)
- Note #6: Min/Max Speed Reference

Table 37: Follower Control Setup Screens

58 Follower Control Setup				
Screen ID No.	Screens	Selections	Parameters Setup Information	Screen Information
700	Operating Mode CHANGING OPERATING MODE WILL OVERWRITE CURRENT SETUP! Follower Control			• The Follower Control setup is only available for North America regional setting. • Continue to screen ID #701.
701	Mode of Operation IPC Follower Control	[IPC Follower Control] [PLC Follower Control]	[19-40] = Off [19-00] = External Reference Mode	• IPC Follower Control: continue to screen ID #702. • PLC Follower Control: continue to screen ID #703.
702	Drive will be used as Fixed Master Follower Control [OK]		[0-20]=Power [hp], [0-21]=Frequency, [0-22]=Motor Current, [0-23]=Reference [%], [3-15]=No Function, [5-10]=No Operation, [8-30]=FC, [8-32]=115200 Baud, [20-00]=No Function, [1390.5]=[1390.8]=[1390.9]= False, [8-02]=FC Port in Setup1 & Setup 2, [8-04]=Select Setup 2 in Setup 1&2, [8-53]=Logic OR in Setup1, [8-53]=Digital Input in Setup 2.	Continue to screen ID #704.
703	Drive will be used as PLC Follower Control [OK]		[5-10]=No Operation, [8-02]=FC Port, [8-30]=Modbus RTU, [8-32]=9600 Baud, [8-33]=No Parity, 1 Stop bit, [20-00]=No Function, [1390.5]=[1390.8]=[1390.9]=False.	Continue to screen ID #704.

58 Follower Control Setup				
Screen ID No.	Screens	Selections	Parameters Setup Information	Screen Information
704	Pump Address 1	_____	[8- 31] = Entry	• (IPC Follower Control): continue to screen ID #705. • (PLC Follower Control): continue to screen ID #707.
705	Min Speed Reference 0.000Hz Max Speed Reference 60.000Hz	___ Hz ___ Hz	[3-02] = 1st entry [3-03] = 2nd entry	Continue to screen ID #706.
706	Fixed Master Follower Control Configured [OK]	[OK]		OK: Continue to Exit in the Main Menu Screen table.
707	PLC Follower Control has been configured [OK]	[OK]		OK: Continue to Exit in the Main Menu Screen table.

7.5.9 Test Run Mode setup

Test Run Mode allows the controller to perform a test which will ramp the pump at a specified speed in order to perform a test on the system and pump/motor. Test Run Mode is triggered to start based on the state of DI 18. When DI 18 is closed, the test will begin. When DI 18 is open, test run mode will stop. To configure Test Run Mode set the test run speed and test run ramp time. The Test Run Speed is the speed that the controller will ramp the pump to. The Test Run Ramp Time is the ramp used to reach the Test Run Speed. This ramp is the time to ramp from stop (0 RPM) and the rated motor speed. The Test Run Ramp Time applies to both acceleration and deceleration in Test Run Mode.

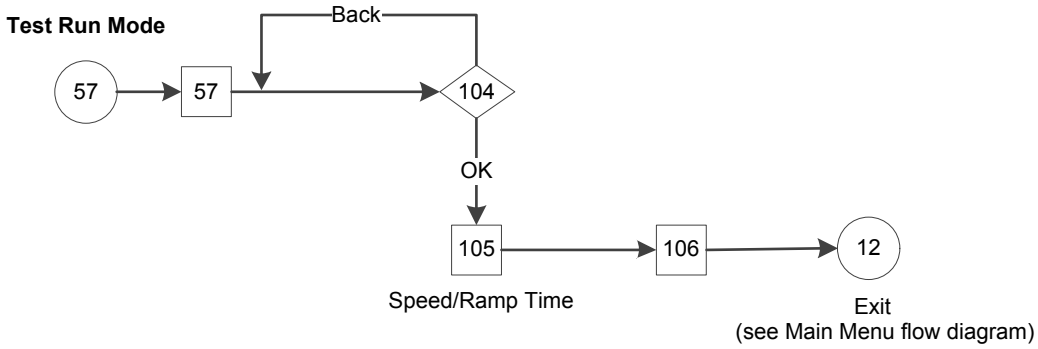

Figure 101: Test Run Mode Flow Diagram

Table 38: Test Run Mode Setup Screens

57 Test Run Mode Setup				
Screen ID No.	Screens	Selections	Parameters Setup Information	Screen Information
57	Operating Mode CHANGING OPERATING MODE WILL OVERWRITE CURRENT SETUP! Test Run Mode			• Test Run Mode allows the controller to perform a test which will ramp the pump at a specified speed in order to perform a test on the system and pump/motor. • Continue to screen ID #104.
104	Test Run Mode ramps the motor to a specified speed. DI 18 is used to start and stop Test Run Mode. [OK] to continue;[BACK] to return	[OK] [Back]		• OK: continue to screen ID #105. • Back: return to previous screen ID #57.
105	Test Run Speed 10.0Hz Test Run Ramp Time 10.00s	_____[RPM/Hz] _____s	RPM: [3-19]=first entry, or Hz: [3-11]=first entry, [3-80]=second entry, [0-20]=Power [hp], [0-21]=Motor current, [0-22]=Power [kW], [0-23]=Frequency, [0-24]=Feedback [Unit], [5-10]=Start, [13-90.5]=[13-90.8] [13-90.9]=False, [19-00]=[2] Test Run.	Continue to screen ID #106.
106	Test Run Mode will be enabled through Digital Input 18. Exit the Start-Up Genie to enable Test Run. [OK]	[OK]		OK: Continue to Exit in the Main Menu Screen table.

7.5.10 Multipump setup

Multipump Setup provides the following functions (see details in the following sections):

- Multipump Autoset
- Fixed Speed Follower
- Multipump Alternation
- Multipump End of Curve Staging

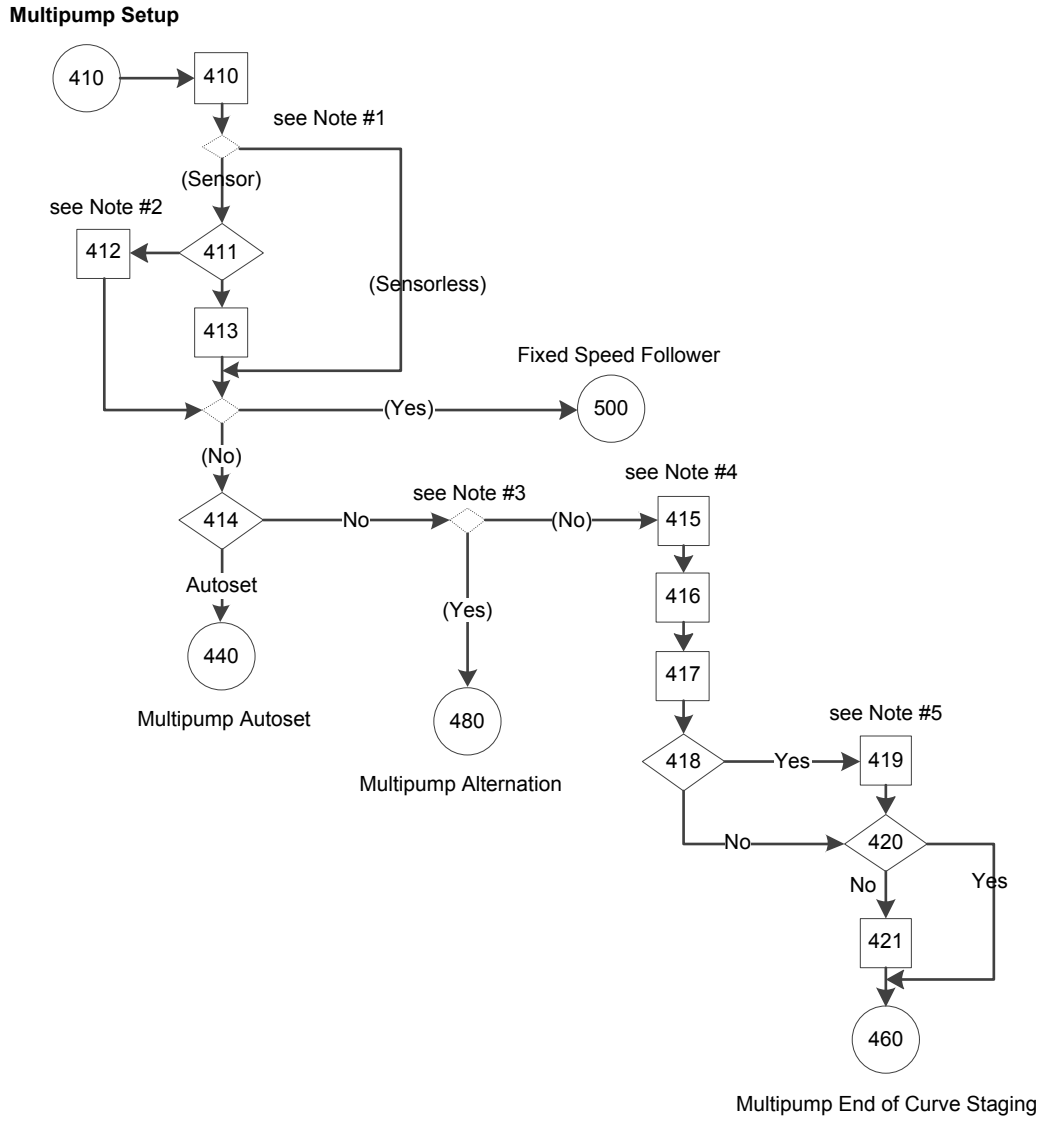

Figure 102: Multipump Setup Flow Diagram

Multipump Setup flow diagram notes:

- Note #1: Sensor Source.
- Note #2: Number of pumps (2, 3, 4) and Number of standby pumps (0, 1 or 0, 1, 2).
- Note #3: (#pumps - #standby) = 1.
- Note #4: Stage Speed/Proof Time and Destage Percentage/Proof Time dual parameter screens, and Stabilization Time parameter screen.

Table 39: Multipump Setup Screens

410 Multipump Setup				
Screen ID No.	Screen	Selections	Parameters Setup Information	Screen Information
410	Setup Selection Multipump Setup			The Multipump Setup can be configured for up to 4 pumps. Multipump Setup selection is only visible after the Multipump Control was selected in the Application operating mode.
411	Number of Pumps 2	[2,3,4]	[19-50] = selection.	• Less than 4 pumps: continue to screen ID #412. • 4 pumps: continue to screen ID #413.
412	Number of standby pumps 1	[0, 1]	[19-51] = selection.	• Fixed Speed Follower: continue to the Fixed Speed Follower Screens table. • Not Fixed Speed Follower: continue to screen ID #414.
413	Number of standby pumps 2	[0, 1, 2]	[19-51] = selection.	• Fixed Speed Follower: continue to the Fixed Speed Follower Screens table. • Not Fixed Speed Follower: continue to screen ID #414.
414	Would you like to Autoset the rest of the settings? Yes	[Yes] [No]		• Yes: continue to the Fixed Speed Follower Screens table. • No: – (Number of pumps - Number of standby = 1): continue to the Multipump Alternation Screens table. – (Number of pumps - Number of standby ≠ 1): continue to screen ID #415.

410 Multipump Setup				
Screen ID No.	Screen	Selections	Parameters Setup Information	Screen Information
415	Stage Speed 0% Stage Proof Time 0secs	_____ % _____ secs	[19-60] = first selection. [19-61] = second selection.	Continue to screen ID #416.
416	Destage Percentage 0% Destage Proof Time 0secs	_____ % _____ secs	[19-63] = first selection. [19-64] = second selection.	Continue to screen ID #417.
417	Stabilization Time 0secs	_____ secs	[19-62] = selection.	Continue to screen ID #418.
418	Enable Forced Destage? Yes	[Yes] [No]	No: [19-66] = 0. [19-67] = 999.	Yes: continue to screen ID # 419. No: continue to screen ID #420.
419	Forced Destage Speed 0% Forced Destage Proof Time 0secs	_____ % _____ secs	[19-66] = first selection. [19-67] = second selection.	Continue to screen ID #420.
420	Enable Timed Destage? Yes	[Yes] [No]	No: [19-57] = 0.	Yes: continue to screen ID #421. No: continue to the Multipump End of Curve Staging Screens table.

410 Multipump Setup				
Screen ID No.	Screen	Selections	Parameters Setup Information	Screen Information
421	Timed Destage 0mins	_____ mins	[19-57] = selection.	Continue to the Multipump End of Curve Staging Screens table.

7.5.10.1 Multipump Autoset

The Multipump Autoset allows the user to automatically configure the rest of the parameters to default settings. After the setpoint is configured, the setup of the controller is complete for Sensor control in the Booster pump application, or for Sensor/Sensorless control in HVAC pump application.

NOTE: Setup 1 is the active setup for all applications.

The default configurations are described in the following tables. Note that [unit] will reflect the control units selected previously.

NOTE: Only one standby pump is allowed in the Sensorless mode.

Table 40: Multipump Autoset Configuration for Booster Pump Application (Sensor Control)

Multipump Autoset Configuration	North America			International		
	Constant Pressure	Flow Control	Level Control	Constant Pressure	Constant Flow	Constant Level
Transducer Type	4-20mA	4-20mA	4-20mA	4-20mA	4-20mA	4-20mA
[3-10.0] **Preset Reference**	2.5	2.5	2.5	2.5	2.5	2.5
[4–12] **Sleep Frequency/Low Limit [Hz]**	30 Hz	30 Hz	30 Hz	20 Hz	20 Hz	20 Hz
[5-40.0] **Relay 1 Function**	MCO Controlled	MCO Controlled	MCO Controlled	No Alarm	No Alarm	No Alarm
[5-40.1] **Relay 2 Function**	MCO Controlled	MCO Controlled	MCO Controlled	Running	Running	Running
[6–15] **Terminal 53 High Ref./ Feedb.Value**	300 [unit]	4000 [unit]	300 [unit]	10 [unit]	100 [unit]	10 [unit]
[6–17] **Terminal 53 Sensor Fault (North America) / Live Zero (International)**	Disabled	Disabled	Disabled	Disabled	Disabled	Disabled
[6–27] **Terminal 54 Sensor Fault (North America) / Live Zero (International)**	Disabled	Disabled	Disabled	Disabled	Disabled	Disabled
[13-20.0] **SL Controller Timer**	10 Min	10 Min	10 Min	30 secs	30 secs	30 secs
[14-20] **Reset Mode**	Manual Reset	Manual Reset	Manual Reset	Manual Reset	Manual Reset	Manual Reset

Multipump Autoset Configuration	North America			International		
	Constant Pressure	Flow Control	Level Control	Constant Pressure	Constant Flow	Constant Level
[19-10] **Pump Exercise Idle Time**	0	0	0	100	100	100
[19-11] **Pump Exercise Run Time**	NA	NA	NA	10	10	10
[19-12] **Flow Compensation**	Disabled	Disabled	Disabled	Disabled	Disabled	Disabled
[19–20] **No Water Loss of Prime Fault**	Alarm	Alarm	Alarm	Disabled	Disabled	Disabled
[19–21] **No Water Loss of Prime Protection Delay**	60	60	60	60	60	60
[19–22] **No Water Loss of Prime Restart Time**	10 min.	10 min.	10 min.	10 min.	10 min.	10 min.
[19–23] **No Water Loss of Prime Restart Attempt**	3	3	3	3	3	3
[19-24] **No Flow Shutdown**	Enabled	Disabled	Enabled	Enabled	Disabled	Enabled
[19–25] **No Flow Restart Difference**	10	10	10	NA	NA	NA
[19-26] **High System Fault**	Disabled	Disabled	Disabled	Disabled	Disabled	Disabled
[19-27] **High System Limit**	100	100	100	10	100	10
[19-28] **High System Delay**	3	3	3	3	3	3
[19-32] **Low Suction Fault**	Disabled	Disabled	Disabled	Disabled	Disabled	Disabled
[19-36] **High Suction Fault**	Disabled	Disabled	Disabled	Disabled	Disabled	Disabled
[19-40] **All Zones Failure Function**	Stop	Stop	Stop	Stop	Stop	Stop
[19-45] **Low System Fault**	Disabled	Disabled	Disabled	Disabled	Disabled	Disabled
[19-51] **Standby Pumps**	0	0	0	0	0	0
[19-52] **Alternation Function**	On Run Time	On Run Time	On Run Time	On Run Time	On Run Time	On Run Time
[19-53] **Alternation Time Interval**	24 hrs.	24 hrs.	24 hrs.	24 hrs.	24 hrs.	24 hrs.
[19-57] **Timed Destage**	0	0	0	0	0	0
[19-60] **Stage Speed**	95	95	95	95	95	95
[19-61] **Stage Proof Time**	5	5	5	1	1	1
[19-62] **Stabilization Time**	5	5	5	1	1	1

Multipump Autoset Configuration	North America			International		
	Constant Pressure	Flow Control	Level Control	Constant Pressure	Constant Flow	Constant Level
[19-63] **Destage Percentage**	80	80	80	40	40	40
[19-64] **Destage Proof Time**	5	5	5	1	1	1
[19-66] **Forced Destage Speed**	0	0	0	0	0	0
[19-67] **Forced Destage Proof Time**	30	30	30	30	30	30
[19-68] **Relay 1 Function**	System Alarm or Warning	System Alarm or Warning	System Alarm or Warning	NA	NA	NA
[19-69] **Relay 2 Function**	System Running	System Running	System Running	NA	NA	NA
[19-72] **EOC Staging Function**	Disabled	Disabled	Disabled	Disabled	Disabled	Disabled
[19-74] **EOC Stage Percentage**	80	80	80	80	80	80
[19-75] **EOC Stage Proof Time**	30	30	30	30	30	30
[19-76] **EOC Destage Percentage**	45	45	45	45	45	45
[19-77] **EOC Destage Proof Time**	30	30	30	30	30	30
[19-90] **Pipe Fill Function**	Disabled	Disabled	Disabled	Disabled	Disabled	Disabled
[19-92] **Speed Step**	10	10	10	10	10	10
[19-93] **Steady Time**	10	10	10	10	10	10
[19-94] **Dead Band**	5	5	5	1	1	1
[19-95] **Pipe Fill Max Pump**	1	1	1	1	1	1
[19-97] **Priming Delay**	NA	NA	NA	0	0	0
[20–00] **Feedback 1 Source**	AI 53	AI 53	AI 53	AI 53	AI 53	AI 53
[20–03] **Feedback 2 Source**	No function	No function	No function	No function	No function	No function
[20–06] **Feedback 3 Source**	No function	No function	No function	No function	No function	No function
[20-14] **Maximum Reference/Feedb.**	300 [unit]	4000 [unit]	300 [unit]	10 [unit]	100 [unit]	10 [unit]
[22-21] **Low Power Detection**	Enabled	Enabled	Enabled	Disabled	Disabled	Disabled
[22-40] **Minimum Run Time**	1	1	1	1	1	1
[22-41] **Minimum Sleep Time**	1	1	1	1	1	1

Multipump Autoset Configuration	North America			International		
	Constant Pressure	Flow Control	Level Control	Constant Pressure	Constant Flow	Constant Level
[22-50] **End of Curve Function**	Off	Off	Off	Off	Off	Off
[22-52] **End of Curve Tolerance**	20	20	20	20	20	20
[22–33] **Low Speed [Hz]**	[4-14] * 0.5 in Setup 1					
[22–37] **High Speed [Hz]**	[4-14] * 0.85 in Setup 1					
[22-39] **No Water/ Loss of Prime Limit [HP]**	[1-21] * [4-18] * 0.46 in Setup 1					
[22–35] **Low Speed Power [HP]**	[22-39] * ([22-33] / [4-14])^3 in Setup 1					

Table 41: Multipump Autoset Configuration for HVAC Pump Application (Sensor and Sensorless Control)

Multipump Autoset Configuration	North America				International			
	Sensor		Sensorless		Sensor		Sensorless	
	Constant Pressure	Flow Control	Constant Pressure	Flow Control	Constant Pressure	Constant Flow	Constant Pressure	Constant Flow
Transducer Type	4-20mA	4-20mA	Sensorless Control	Sensorless Control	4-20mA	4-20mA	Sensorless Control	Sensorless Control
[4–12] **Sleep Frequency/Low Limit [Hz]**	18 Hz	18 Hz	24 Hz	24 Hz	30 Hz	30 Hz	30 Hz	30 Hz
[5-40.0] **Relay 1 Function**	MCO Controlled	MCO Controlled	MCO Controlled	MCO Controlled	No Alarm	No Alarm	No Alarm	No Alarm
[5-40.1] **Relay 2 Function**	MCO Controlled	MCO Controlled	MCO Controlled	MCO Controlled	Running	Running	Running	Running
[6–15] **Terminal 53 High Ref./ Feedb.Value**	36 [unit]	4000 [unit]	300 [unit]	4000 [unit]	10 [unit]	100 [unit]	10 [unit]	100 [unit]
[6–17] **Terminal 53 Sensor Fault (North America) / Live Zero (International)**	Disabled	Disabled	Disabled	Disabled	Disabled	Disabled	Disabled	Disabled
[6–27] **Terminal 54 Sensor Fault (North America) / Live Zero (International)**	Disabled	Disabled	Disabled	Disabled	Disabled	Disabled	Disabled	Disabled
[14-20] **Reset Mode**	Manual Reset	Manual Reset	Automatic Reset x 3	Automatic Reset x 3	Manual Reset	Manual Reset	Automatic Reset x 3	Automatic Reset x 3
[19-10] **Pump Exercise Idle Time**	0	0	0	0	100	100	100	100

Multipump Autoset Configuration	North America				International			
	Sensor		Sensorless		Sensor		Sensorless	
	Constant Pressure	Flow Control	Constant Pressure	Flow Control	Constant Pressure	Constant Flow	Constant Pressure	Constant Flow
[19-11] **Pump Exercise Run Time**	NA	NA	NA	NA	10	10	10	10
[19-12] **Flow Compensation**	Disabled	Disabled	Disabled	Disabled	Disabled	Disabled	Disabled	Disabled
[19–20] **No Water Loss of Prime Fault**	Disabled	Disabled	Disabled	Disabled	Disabled	Disabled	Disabled	Disabled
[19-24] **No Flow Shutdown**	Disabled	Disabled	Disabled	Disabled	Disabled	Disabled	Disabled	Disabled
[19-26] **High System Fault**	Disabled	Disabled	Disabled	Disabled	Disabled	Disabled	Disabled	Disabled
[19-27] **High System Limit**	100	100	100	100	10	100	10	100
[19-28] **High System Delay**	3	3	3	3	3	3	3	3
[19-32] **Low Suction Fault**	Disabled	Disabled	Disabled	Disabled	Disabled	Disabled	Disabled	Disabled
[19-36] **High Suction Fault**	Disabled	Disabled	Disabled	Disabled	Disabled	Disabled	Disabled	Disabled
[19-40] **All Zones Failure Function**	Stop	Stop	Stop	Stop	Stop	Stop	Stop	Stop
[19-45] **Low System Fault**	Disabled	Disabled	Disabled	Disabled	Disabled	Disabled	Disabled	Disabled
[19-50] **Number of Pumps**	NA	NA	2	2	NA	NA	2	2
[19-51] **Standby Pumps**	0	0	1	1	0	0	1	1
[19-52] **Alternation Function**	On Run Time	On Run Time	On Run Time	On Run Time	On Run Time	On Run Time	On Run Time	On Run Time
[19-53] **Alternation Time Interval**	24 hrs.	24 hrs.	24 hrs.	24 hrs.	24 hrs.	24 hrs.	24 hrs.	24 hrs.
[19-57] **Timed Destage**	0	0	NA	NA	0	0	NA	NA
[19-60] **Stage Speed**	95	95	NA	NA	95	95	NA	NA
[19-61] **Stage Proof Time**	30	30	NA	NA	1	1	NA	NA
[19-62] **Stabilization Time**	60	60	NA	NA	1	1	NA	NA
[19-63] **Destage Percentage**	80	80	NA	NA	40	40	NA	NA

Multipump Autoset Configuration	North America				International			
	Sensor		Sensorless		Sensor		Sensorless	
	Constant Pressure	Flow Control	Constant Pressure	Flow Control	Constant Pressure	Constant Flow	Constant Pressure	Constant Flow
[19-64] **Destage Proof Time**	30	30	NA	NA	1	1	NA	NA
[19-66] **Forced Destage Speed**	0	0	NA	NA	0	0	NA	NA
[19-67] **Forced Destage Proof Time**	30	30	NA	NA	30	30	NA	NA
[19-68] **Relay 1 Function**	System Alarm or Warning	System Alarm or Warning	System Alarm or Warning	System Alarm or Warning	NA	NA	NA	NA
[19-69] **Relay 2 Function**	System Running	System Running	System Running	System Running	NA	NA	NA	NA
[19-72] **EOC Staging Function**	Disabled	Disabled	Disabled	Disabled	Disabled	Disabled	Disabled	Disabled
[19-74] **EOC Stage Percentage**	80	80	NA	NA	80	80	NA	NA
[19-75] **EOC Stage Proof Time**	30	30	NA	NA	30	30	NA	NA
[19-76] **EOC Destage Percentage**	45	45	NA	NA	45	45	NA	NA
[19-77] **EOC Destage Proof Time**	30	30	NA	NA	30	30	NA	NA
[19-90] **Pipe Fill Function**	Disabled	Disabled	Disabled	Disabled	Disabled	Disabled	Disabled	Disabled
[19-92] **Speed Step**	10	10	10	10	10	10	10	10
[19-93] **Steady Time**	10	10	10	10	10	10	10	10
[19-94] **Dead Band**	5	5	5	5	1	1	1	1
[19-95] **Pipe Fill Max Pump**	1	1	1	1	1	1	1	1
[19-97] **Priming Delay**	NA	NA	NA	NA	0	0	0	0
[20–00] **Feedback 1 Source**	AI 53	AI 53	Sensorless Pressure	Sensorless Flow	AI 53	AI 53	Sensorless Pressure	Sensorless Flow
[20–03] **Feedback 2 Source**	No function	No function	No function	No function	No function	No function	No function	No function
[20–06] **Feedback 3 Source**	No function	No function	No function	No function	No function	No function	No function	No function

Multipump Autoset Configuration	North America				International			
	Sensor		Sensorless		Sensor		Sensorless	
	Constant Pressure	Flow Control	Constant Pressure	Flow Control	Constant Pressure	Constant Flow	Constant Pressure	Constant Flow
[20-14] **Maximum Reference/ Feedb.**	300 [unit]	4000 [unit]	300 [unit]	4000 [unit]	10 [unit]	100 [unit]	10 [unit]	100 [unit]
[22-21] **Low Power Detection**	Enabled	Enabled	Enabled	Enabled	Disabled	Disabled	Disabled	Disabled
[22-50] **End of Curve Function**	Off	Off	Off	Off	Off	Off	Off	Off
[22-52] **End of Curve Tolerance**	20	20	20	20	20	20	20	20

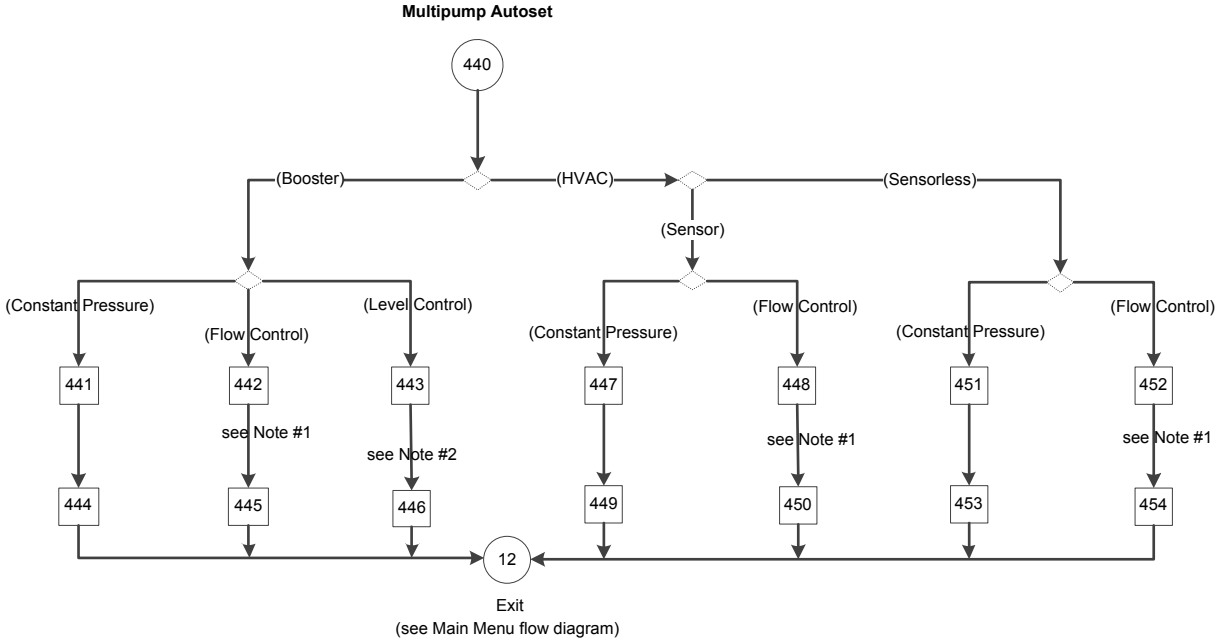

Figure 103: Multipump Autoset Flow Diagram

Notes:

- Note #1:
  - North America: (Flow Control)
  - International: (Constant Flow)
- Note #2:
  - North America: (Level Control)
  - International: (Constant Level)

Table 42: Multipump Autoset Screens Table

440 Multipump Autoset				
Screen ID No.	Screens	Selections	Parameters Setup Information	Screen Information
				• (Booster) : – (Constant Pressure): continue to screen ID #441. – (Flow Control or Constant Flow): continue to screen ID #442. – (Level Control or Constant Level): continue to screen ID #443. • (HVAC): – (Sensor) – (Constant Pressure): continue to screen ID #447. – (Flow Control or Constant Flow): continue to screen ID #448. – (Sensorless) – (Constant Pressure): continue to screen ID #451. – (Flow Control or Constant Flow): continue to screen ID #452. – (Sensorless) – (Constant Pressure): continue to screen ID #451. – (Flow Control or Constant Flow): continue to screen ID #452.

440 Multipump Autoset				
Screen ID No.	Screens	Selections	Parameters Setup Information	Screen Information
441, 442, 443, 447, 448, 451, 452	Setpoint 1 15.000psi	_____ [unit]	[20-21] = entry (Setup 1).	• Screen ID #441: continue to screen ID #444. • Screen ID #442: continue to screen ID #445. • Screen ID #443: continue to screen ID #446. • Screen ID #447: continue to screen ID #449. • Screen ID #448: continue to screen ID #450. • Screen ID #451: continue to screen ID #453. • Screen ID #452: continue to screen ID #454.
444	North America: Constant Pressure with 300 [unit], 4-20mA sensor on AI 53, Sleep Frequency = 30Hz, Restart Difference = 10 [unit], No Water/Loss of Prime fault is enabled, Restart Time = 10 mins, Duty Standby = Disabled, Stage Speed = 95% , Destage Percentage = 80%, Alternation Function = On Run Time, Alternation Time = 24 hrs., Pump Exercise = disabled. International: See Notes below the table	[OK]	See the Constant Pressure parameters setup information for North America or International in *Table 40: Multipump Autoset Configuration for Booster Pump Application (Sensor Control)* on page 163.	OK: continue to Exit in the Main Menu Screen table.
445	North America: Flow Control with 4000 [unit], 4-20mA sensor on AI 53, Sleep Mode = Disabled, No Water/Loss of Prime fault is enabled, Restart Time = 10 mins, Duty Standby = Disabled, Stage Speed = 95% , Destage Percentage = 80%, Alternation Function = On Run Time, Alternation Time = 24 hrs., Pump Exercise = disabled. International: See Notes below the table	[OK]	See the Flow Control (North America) or Constant Flow (International) parameters setup information in *Table 40: Multipump Autoset Configuration for Booster Pump Application (Sensor Control)* on page 163.	OK: continue to Exit in the Main Menu Screen table.
446	North America: Level Control with 300 [unit], 4-20mA sensor on AI 53, Sleep Frequency = 30Hz, Restart Difference = 10 [unit], No Water/ Loss of Prime fault is enabled, Restart Time = 10 mins, Duty Standby = Disabled, Stage Speed = 95% , Destage Percentage = 80%, Alternation Function = On Run Time, Alternation Time = 24 hrs., Pump Exercise = disabled. International: See Notes below the table	[OK]	See the Level Control (North America) or Constant Level (International) parameters setup information in *Table 40: Multipump Autoset Configuration for Booster Pump Application (Sensor Control)* on page 163.	OK: continue to Exit in the Main Menu Screen table.

440 Multipump Autoset				
Screen ID No.	Screens	Selections	Parameters Setup Information	Screen Information
449	North America: Constant Pressure with 36 [unit], 4-20mA sensor on AI 53, Sleep Mode = Disabled, No Water/Loss of Prime fault is disabled, Duty Standby = Disabled, Stage Speed = 95% , Destage Percentage = 80%, Alternation Function = On Run Time, Alternation Time = 24 hrs., Pump Exercise = disabled. International: See Notes below the table	[OK]	See the Constant Pressure parameters setup information for Sensor Control, North America or International in the above *Table 41: Multipump Autoset Configuration for HVAC Pump Application (Sensor and Sensorless Control)* on page 166.	OK: continue to Exit in the Main Menu Screen table.
450	North America: Flow Control with 4000 [unit], 4-20mA sensor on AI 53, Sleep Mode = Disabled, No Water/Loss of Prime fault is disabled, Duty Standby = Disabled, Stage Speed = 95% , Destage Percentage = 80%, Alternation Function = On Run Time, Alternation Time = 24 hrs., Pump Exercise = disabled. International: See Notes below the table	[OK]	See the above Flow Control (North America) or Constant Flow (International) parameters setup information for Sensor Control in *Table 41: Multipump Autoset Configuration for HVAC Pump Application (Sensor and Sensorless Control)* on page 166.	OK: continue to Exit in the Main Menu Screen table.
453	North America: Constant Pressure with 300 [unit],sensorless Control in closed loop application[OK] International: See Notes below the table	[OK]	See the Constant Pressure parameters setup information for Sensorless Control, North America or International in *Table 41: Multipump Autoset Configuration for HVAC Pump Application (Sensor and Sensorless Control)* on page 166.	OK: continue to Exit in the Main Menu Screen table.
454	North America: Flow Control with 4000 [unit],sensorless Control in closed loop application. [OK] International: See Notes below the table	[OK]	See the Flow Control (North America) or Constant Flow (International) parameters setup information for Sensorless Control *Table 41: Multipump Autoset Configuration for HVAC Pump Application (Sensor and Sensorless Control)* on page 166.	OK: continue to Exit in the Main Menu Screen table.

Notes:

Screens #444, #449 and #453 will be displayed as the following:

Constant Pressure Default Values Loaded (See IOM) [OK]

Screens #445, #450 and #454 will be displayed as the following:

Constant Flow Default
Values Loaded (See IOM).
[OK]

Screens #446 will be displayed as the following:

Constant Level Default
Values Loaded (See IOM).
[OK]

7.5.10.2 Fixed Speed Follower setup

Refer to the Fixed Speed Follower information in the *Multipump Control setup* on page 147 for the description, wiring and connections.

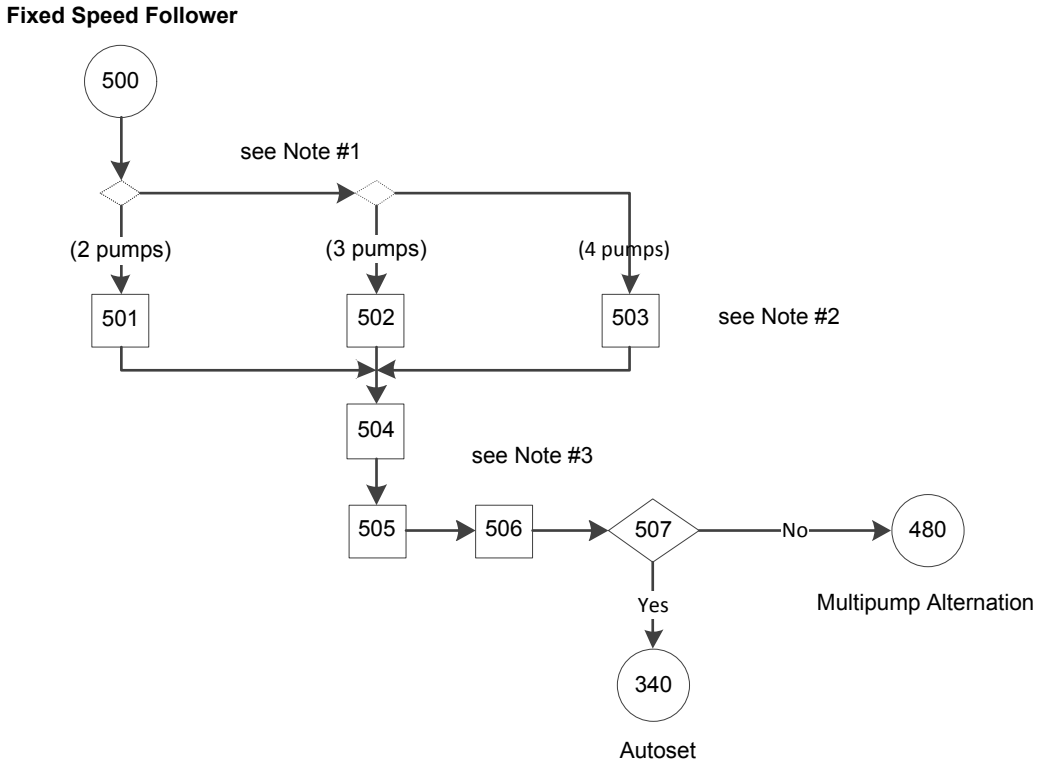

Figure 104: Fixed Speed Follower Flow Diagram

Fixed Speed Follower flow diagram notes:

- Note #1: (Parameter [19-50] Number of Pumps = 2/3/4?)
- Note #2: Information screens for 2, 3 or 4 pumps.
- Note #3: Staging Bandwidth, Stage/Destage Proof Time and Fixed Speed Bandwidth parameter screens.

Table 43: Fixed Speed Follower Screens

500 Fixed Speed Follower				
Screen ID No.	Screens	Selections	Parameters Setup Information	Screen Information
			If [19-50] = 2: [5-32] = MCO Controlled. • If [19-50] = 3: [5-33] = MCO Controlled • If [19-50] = 4: [5-33] = 540.0 = MCO Controlled.	[19-50] = • 2: continue to screen ID #501. • 3: continue to screen ID #502. • 4: continue to screen ID #503.
501	Digital Output Pin 6 Controls Fixed Speed Pump 1 [OK]	[OK]		Continue to screen ID #504.
502	Digital Output Pin 6 Controls Fixed Speed Pump 1, Digital Output Pin 7 Controls Fixed Speed Pump 2 [OK]	[OK]		Continue to screen ID #504.
503	"Digital Output Pin 6 Controls Fixed Speed Pump 1, Digital Output Pin 7 Controls Fixed Speed Pump 2, Relay 1 Controls Fixed Speed Pump 3"	[OK]		Continue to screen ID #504.
504	Staging Bandwidth 10%	_____ %	[15-20] = entry.	Continue to screen ID #505.
505	Stage Proof Time 30secs Destage Proof Time 30secs	_____ s _____ s	[19-61] = first entry. [19-64] = second entry.	Continue to screen ID #506.

500 Fixed Speed Follower				
Screen ID No.	Screens	Selections	Parameters Setup Information	Screen Information
506	Fixed Speed Bandwidth 10%	%	[25-22] = entry.	Continue to screen ID #507.
507	Would you like to Autoset the rest of the settings? Yes	[Yes] [No]		Yes: continue to the Autoset Screens Table. No: continue to the Multipump Alternation Screens table.

7.5.10.3 Multipump End of Curve Staging setup

EOC (End-of-Curve) protection means protection from having the control curve drop off the pump curve. This leads to cavitation and is highly undesirable. If the flow meter detects that flow has exceeded a programmed value depending upon the number of pumps operating, then it should stage on another pump as possible to overflow the system. This causes the 2-way valves in the system to begin to close which forces the control curve left back onto the pump curve where cavitation ceases. If the control curve cannot be got back onto the pump curve, the controller exports a warning after a time delay has elapsed, but continues to operate.

NOTE: A flow meter input is required for flow measurement in the correct units and for end-of-curve protection.

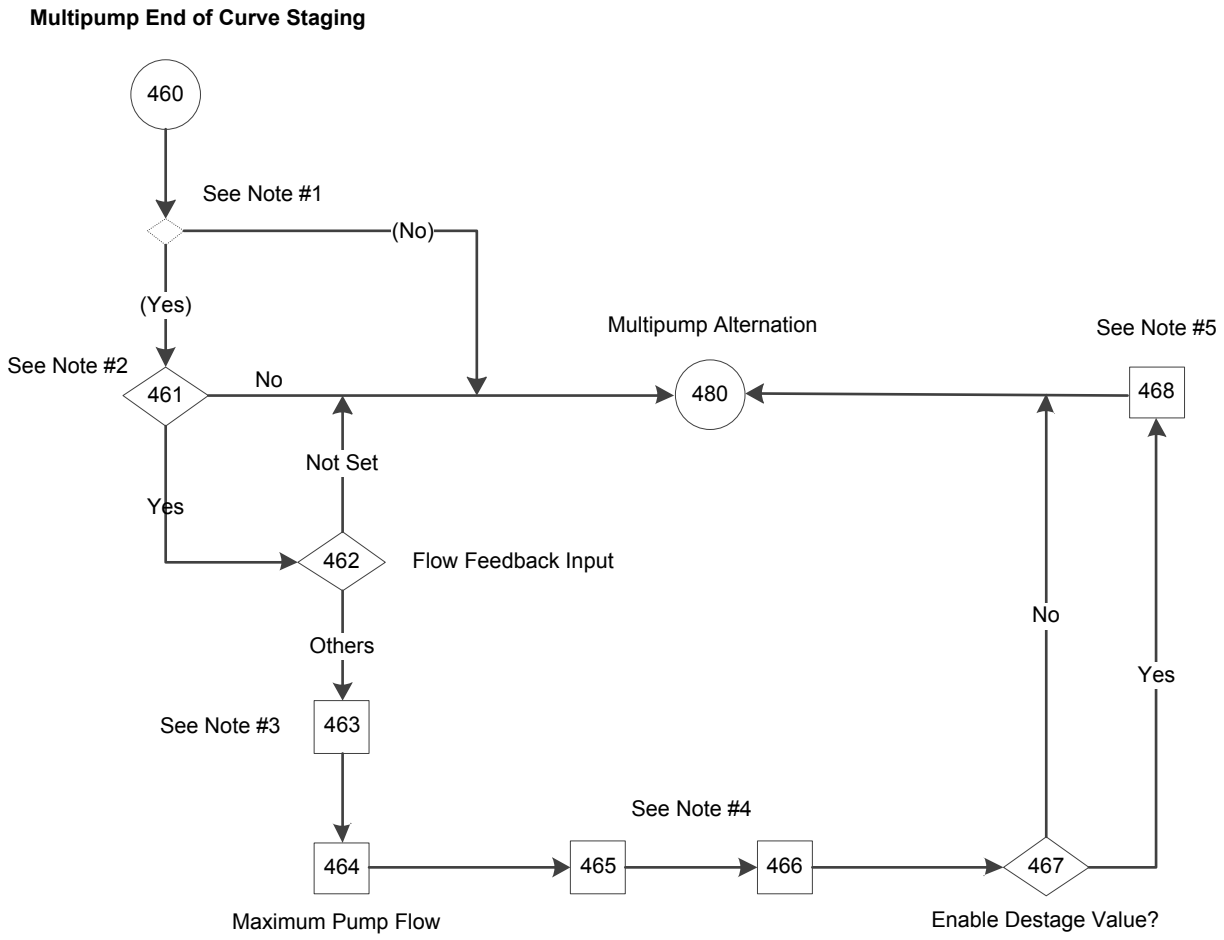

Figure 105: Multipump End of Curve Staging Flow Diagram

Multipump End of Curve Staging flow diagram notes:

- Note #1: (Constant Pressure AND Multipump Control = Fixed Master Synchronous/ Multi Master Synchronous) condition.
- Note #2: Enable End of Curve Staging selection screen.
- Note #3: Low/High Feedback Value dual parameter screen.
- Note #4: End of Curve Stage Percentage/Proof Time dual parameter screen.
- Note #5: Flow Destage Value/Proof Time dual parameter screen.

Table 44: Multipump End of Curve Staging Flow Diagram

460 Multipump End of Curve Staging				
Screen ID No.	Screens	Selections	Parameters Setup Information	Screen Information
				• If (Application Type = Constant Pressure & [19-01] Multipump Control = Fixed Master Synchronous/ Multi Master Synchronous): continue to screen ID #461. • Else: continue to the Multipump Alteration Screens table.

460 Multipump End of Curve Staging				
Screen ID No.	Screens	Selections	Parameters Setup Information	Screen Information
461	Enable End of Curve Staging? Yes	[Yes] [No]		• Yes: continue to screen ID #462. • No: continue to the Multipump Alteration Screens table.
462	Flow Feedback Input Not Set	[Not Set] [Analog Input 53] [Analog Input 54] [Analog Input X30/11] [Analog Input X30/12] [Analog Input X42/1] [Analog Input X42/3] [Analog Input X42/5]	[19-70] = selection. • If [19-70] = [0] Not Set: [19-72] = [0] Disabled. • If [19-70] = [0] Not Set: [19-72] = [0] Disabled.	• If [19-70] = [0] Not Set: continue to the Multipump Alteration Screens table. • Else: continue to screen ID #463.
463	Low Feedback Value 0.000 High Feedback Value 60.000	_____ [Unit] _____ [Unit]	[19-72] = Enabled	Continue to screen ID #464.
464	Max. Pump Flow 0.000	_____	[19-73] = selection.	Continue to screen ID #465.
465	EOC Stage Percentage 0% EOC Stage Proof Time 0secs	_____ % _____ secs	[19-74] = first selection. [19-75] = second selection.	Continue to screen ID #466.
466	EOC Destage Percentage 0% EOC Destage Proof Time 0secs	_____ % _____ secs	[19-76] = first selection. [19-77] = second selection.	Continue to screen ID #467.

460 Multipump End of Curve Staging				
Screen ID No.	**Screens**	**Selections**	**Parameters Setup Information**	**Screen Information**
467	Enable Flow Destage? Yes	[Yes] [No]	No: [19-78] = 0. [19-79] = 999	• Yes: continue to screen ID #468. • No: continue to the Multipump Alteration Screens table.
468	Flow Destage Value 0.000 Flow Destage Proof Time 0secs	_____ % _____ secs	[19-78] = first selection. [19-79] = second selection.	Continue to the Multipump Alteration Screens table.

7.5.10.4 Multipump Alternation setup

Multipump alternation is supported by all Multi-Pump Control mode of operation. Enabling Alternation allows equalization of loading between all pumps and controllers. Three ways of alternation are supported in Advance controller:

1. Automatic alternation
   a. On run time
   b. On Clock time
2. LCP key combination
3. Using digital input

In systems with more than one pump, the lead pump is capable of being alternated manually by keystroke (use of LCP button combinations) or automatically through the use of an alternation timer parameter. Enabling Alternation allows equalization of loading between all pumps and controllers.

See [19-52] **Alternation Function** in Group 19 Parameter Descriptions section for more details.

NOTE: If Duty Standby is enabled by limiting the number of active pumps and maximum number of pumps that are already running, the pump to be alternated will be destaged first, before a new pump will be staged on.

NOTE: Any stopped or tripped pump will automatically be excluded from alternation sequence.

Multipump Alternation

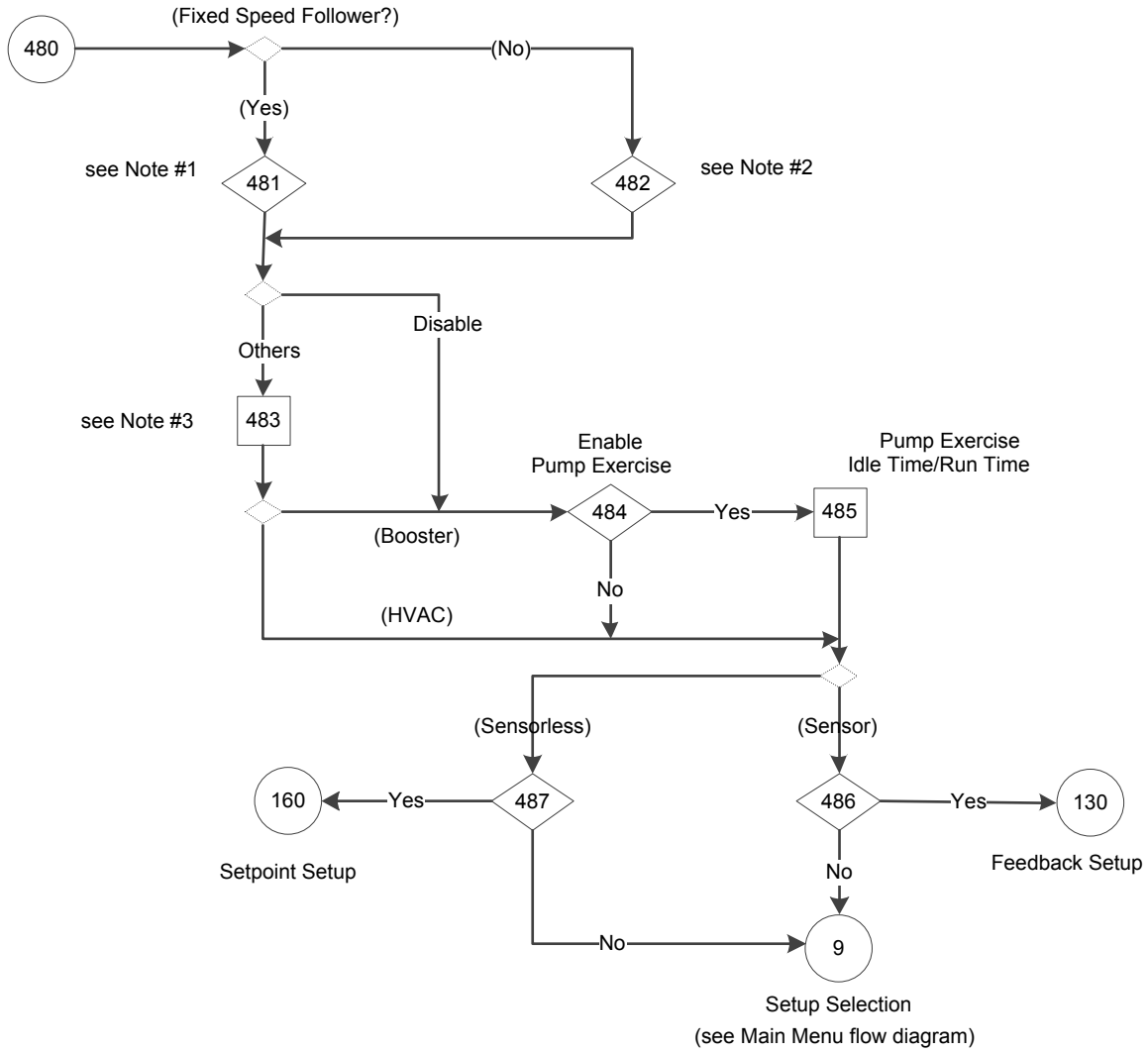

Figure 106: Multipump Alternation Flow Diagram

Multipump Alternation flow diagram notes:

- Note #1: Fixed Speed Follower condition.
- Note #2: Alternation Function selection screens.
- Note #3: Alternation Time Interval parameter screen.
- Note #4: Pump Exercise Idle Time/Run Time dual parameter screen.

Table 45: Multipump Alternation Screens

480 Multipump Alternation				
Screen ID No.	Screens	Selections	Parameter Setup Information	Screen Information
				• If (Fixed Speed Follower): continue to screen ID #481. • Else: continue to screen ID #482.

480 Multipump Alternation				
Screen ID No.	Screens	Selections	Parameter Setup Information	Screen Information
481	Alternation Function Disabled	[Disabled] [On Clock Time]	[19-52] = selection ([19-52] selection list except On Run Time) If [19-52] = Disable & (HVAC): [19-10] = [19-11] = 0.	• If [19-52] = Disabled: • (Booster) continue to screen ID #484. • (HVAC): continue to screen ID #486. • Else: continue to screen ID #483.
482	Alternation Function Disabled	[Disabled] [On Run Time] [On Clock Time]	[19-52] = selection.	See the above screen ID #481.
483	Alt Time Int 0hours	_____ hours	[19-53] = selection. If (HVAC): [19-10] = [19-11] = 0.	• (Booster): continue to screen ID #484. • (HVAC): continue to screen ID #486.
484	Enable Pump Exercise? Yes	[Yes] [No]	No: [19-10] = [19-11] = 0.	• Yes: continue to screen ID #485. • No: continue to screen ID #486.
485	Pump Exe Idle Time 0hours Pump Exe Run Time 0secs	_____ hours _____ secs	[19-10] = first selection. [19-11] = second selection.	Continue to screen ID #486.
486	Continue to the Feedback Setup? No	[Yes] [No]		• Yes: continue to the Feedback Setup Screens table. • No: continue to the Setup Selection screen ID #6 in the Main Menu Screens table.

7.5.11 Feedback setup

Feedback setup function is not available for sensorless source. For sensor source, the controller can utilize up to 4 feedback sources using the onboard IO: 2 of these sources

can be configured for the analog inputs (AI 53 and AI 54), the other 2 can be set to bus feedbacks which can be set through the onboard fieldbus communications.

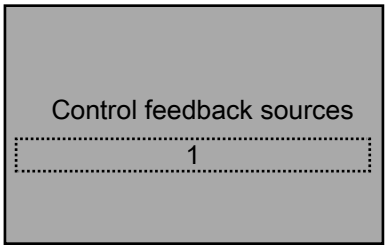

When using analog inputs be sure to set the analog input configuration switches to the appropriate feedback type. Refer to the Analog Input Configuration (switch A54) section for details on setting the analog input configuration switches. Refer to the Common Terminal Wiring Configurations section in this manual for detail on wiring external devices to the analog inputs.

In the Booster Pump Application Type, [20-20] **Feedback Function** is always set to Minimum value if only one feedback source is selected. If multiple feedback sources are selected, the **Feedback Function** can be configured from the list of [20-20] **Feedback Function** (excluding multi-zone multi-setpoint).

In the HVAC Pump Application Type, [20-20]**Feedback Function** is always set to Multi Setpoint Min value if the regional setting was North America. If the regional setting was International, [20-20]**Feedback Function** is always set to Minimum value if only one feedback source is selected; if multiple feedback sources are selected, the Feedback Function can be configured from the list of [20-20]**Feedback Function**.

The Feedback Function determines how the multiple feedbacks will be used to control the system.

[20–20] Feedback Function	
Sum	The sum of all feedbacks will be in the feedback to the controller.
Difference	The difference between Feedback 2 and Feedback 1 will be the feedback to the controller. This setting is commonly used to configure a differential pressure signal using 2 separate transducers. NOTE This selection is only valid with Feedback 1 and Feedback 2. Feedback 3 is not used with this selection.
Average	The average of all feedback will be the feedback to the controller.
Minimum	The lowest feedback will be the feedback to the controller.
Maximum	The highest feedback will be the feedback to the controller.

The minimum and maximum values for each feedback source must be configured to properly scale the input. For example, for a 0-300 psi transducer, set the Low Feedback 1 Value to 0 psi and the High Feedback 1 Value to 300 psi.

After configuring all setpoints, the type of alarm for sensor fault can be set for each feedback.

In HVAC pump application, the All Zone Failure Function (AZF Function) screen displays for selecting Off, Stop, Stop and Trip or Constant Speed.

In Booster pump application type, the Sensor Fault Function displays for selecting Off, Stop or Stop and Trip. Constant Speed is not available in Booster type.

[6-17] **Terminal 53 Sensor Fault (North America) / Live Zero (International)** for Analog Input 53 and Parameter [6-27] **Terminal 54 Sensor Fault (North America) / Live Zero (International)** for Analog Input 54 are required to set to Disable for the sensor fault to

operate the above setting when the input to the feedback source falls below 2mA for 4-20mA signals that issue the sensor fault.

If [6-17] or [6-27] is set to Enabled, the sensor fault will automatically restart according to [14-20] **Reset Mode** and [14-21] **Automatic Restart Time**. The defaults for these parameters are set for an Automatic reset x 3 and an Automatic Restart Time of 10 seconds. For example, with the default settings if a Sensor Fault is issued the controller will attempt to reset every 10 seconds. The controller will make 3 attempts to reset the fault. If the fault is not cleared in this time the controller will require a manual reset.

If the Constant Speed is selected in All Zone Failure Function for sensor fault in the HVAC pump application type, the speed (RPM or Hz) of the pump to run after the sensor fault occurs can be changed for single pump or multipump.

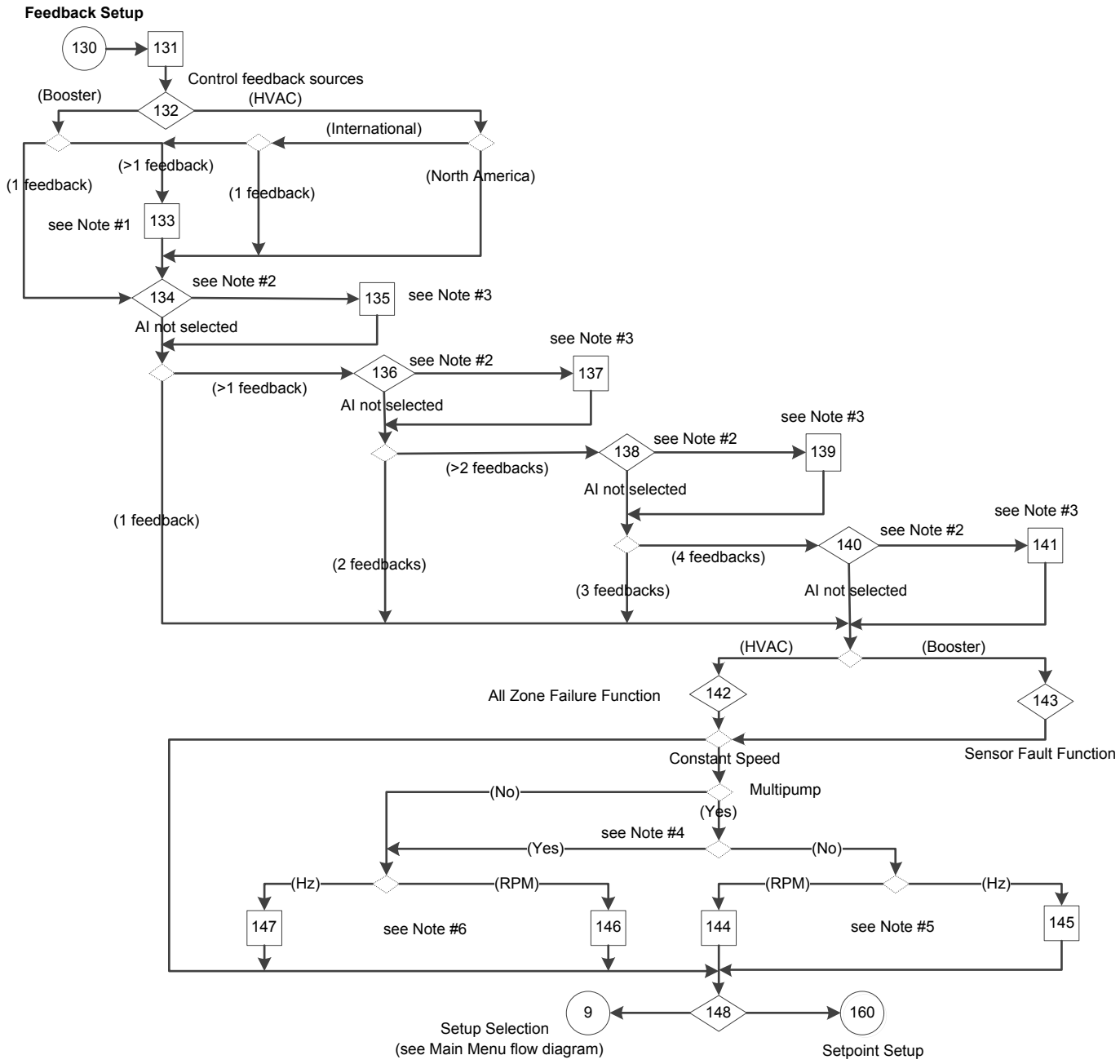

Figure 107: Feedback Setup Flow Diagram

Feedback Setup flow diagram notes:

- Note #1: **Feedback Function**.
- Note #2: Feedback 1/2/3/4.
- Note #3: & High Feedback 1/2/3/4 Value.
- Note #4: (#pump - #standby) > 1.
- Note #5: Number of Pumps Running and All Zones Failure Speed (RPM/Hz).
- Note #6: All Zones Failure Speed (RPM/Hz).

Table 46: Feedback Setup Screens

130 Feedback Setup				
Screen ID No.	Screens	Selections	Parameters Setup Information	Screen Information
131	Setup Selection Feedback			• The controller can utilize up to 4 feedback sources using the onboard IO. • Feedback Setup is not available for Sensorless mode. • Continue to screen ID #132.
132	Control feedback sources 4	[1, 2, 3 or 4]	• (Booster): If # feedbacks = 1: [20-20] = Minimum • (HVAC): – (North America): [20-20] = Multi Setpoint Min. – (International): If # feedback = 1: [20-20] = Minimum	• (Booster & # feedback >1) or (HVAC & International & # feedback > 1): continue to screen ID #133. • (Booster & # feedback = 1) or (HVAC & International & # feedback > 1): continue to screen ID # 134.
133	Feedback Function Minimum	• (Booster & # feedback = 1): – [Sum] – [Difference] – [Average] – [Minimum] – [Maximum] • (HVAC & International & # feedback = 1): – [Sum] – [Difference] – [Average] – [Minimum] – [Maximum] – [Multi Setpoint Min] – [Multi Setpoint Max]		Continue to screen ID #134.

130 Feedback Setup				
Screen ID No.	Screens	Selections	Parameters Setup Information	Screen Information
134	Feedback 1 Source Analog Input 53	[All of the following that are available in parameter 20-00 selection list, minus selection in 19-70] [Analog Input 53] [Analog Input 54] [Analog Input X30/11] [Analog Input X30/12] [Analog Input X42/1] [Analog Input X42/3] [Analog Input X42/5] [Analog Input X48/2] [Bus Feedback 1] [Bus Feedback 2] [Bus Feedback 3]	• [20-00] = **Feedback 1 Source** selection • The feedback selections are only available in [20-00] selection list, minus selection in [19-70].	• Was Analog Input selected?: – Yes: continue to screen ID #135. – No: see Screen Information at screen ID #136.
135	Low Feedback 1 Value 0.000 High Feedback 1 Value 60.000	_____ _____	• [20-13] = first entry • [20-14] = second entry • (# of feedback = 1): [20–03] = No function.	• (# of feedbacks > 1): continue to screen ID #136. • (# of feedback = 1): – (HVAC): continue to screen ID #142. – (Booster): continue to screen ID #143.
136	Feedback 2 Source Analog Input 54	[All of the following that are available in parameter 20-03 selection list, minus selection in 19-70 and 20-00] [Analog Input 53] [Analog Input 54] [Analog Input X30/11] [Analog Input X30/12] [Analog Input X42/1] [Analog Input X42/3] [Analog Input X42/5] [Analog Input X48/2] [Bus Feedback 1] [Bus Feedback 2] [Bus Feedback 3]	• [20–03] = **Feedback 2 Source** selection (The available feedback selections are available in [20–03] selection list, minus the selection in [19–70] and [20–00].)	• Was Analog Input selected?: – Yes: continue to screen ID #137. – No: see Screen Information at screen ID #138.

130 Feedback Setup				
Screen ID No.	Screens	Selections	Parameters Setup Information	Screen Information
137	Low Feedback 2 Value 0.000 High Feedback 2 Value 300.000	_____ _____	• [20–13] = first entry. [20–14] = second entry. • (# of feedback = 2): [20–03] = No function.	• (# of feedbacks > 2): continue to screen ID #138. • (# of feedback = 2): – (HVAC): continue to screen ID #142. – (Booster): continue to screen ID #143.
138	Feedback 3 Source Bus Feedback 1	[All of the following that are available in parameter 20-06 selection list, minus selection in 19-70, 20-00 and 20-03] [Analog Input 53] [Analog Input 54] [Analog Input X30/11] [Analog Input X30/12] [Analog Input X42/1] [Analog Input X42/3] [Analog Input X42/5] [Analog Input X48/2] [Bus Feedback 1] [Bus Feedback 2] [Bus Feedback 3]	• [20-06] = selection (The available selections are available in [20-06] selection list, minus the selections in [19–70], [20–00] and [20–03].)	• Was Analog Input selected?: – Yes: continue to screen ID #139. – No: continue to the output of screen ID #141.
139	Low Feedback 3 Value 0.000 High Feedback 3 Value 300.000	_____ [Unit] _____ [Unit]	• [20–13] = first entry. [20–14] = second entry. • (# of feedback = 3): [20–03] = No function.	• (# of feedback ≠ 3): continue to screen ID #140. • (# of feedback = 3): – (HVAC): continue to screen ID #142.

130 Feedback Setup				
Screen ID No.	Screens	Selections	Parameters Setup Information	Screen Information
140	Feedback 4 Source Bus Feedback 2	[All of the following that are available in [19-80] selection list, minus selection in [19-70], [20-00], [20-03] and [20-06]] [Analog Input 53] [Analog Input 54] [Analog Input X30/11] [Analog Input X30/12] [Analog Input X42/1] [Analog Input X42/3] [Analog Input X42/5] [Analog Input X48/2] [Bus Feedback 1] [Bus Feedback 2] [Bus Feedback 3]	• [19-80] = selection • The available selections are available in [19–80] selection list, minus the selections in [19–70], [20–00], [20–03] and [20–06].	• Was Analog Input selected?: – Yes: continue to screen ID #141. – No: continue to the output of screen ID #142.
141	Low Feedback 4 Value 0.000 High Feedback 4 Value 60.000	_____ [Unit] _____ [Unit]	• [20–13] = first entry. [20–14] = second entry.	• (HVAC): continue to screen ID #142. • (Booster): continue to screen ID #143.

130 Feedback Setup				
Screen ID No.	Screens	Selections	Parameters Setup Information	Screen Information
142	AZF Function Constant Speed	[Off] [Stop] [Constant Speed] [Stop and Trip]	[19–40] = selection	• Constant Speed: – (Multipump and #running pumps ≠ 1 and Motor Speed Unit = RPM): continue to screen ID # 144. – (Multipump and #running pumps ≠ 1 and Motor Speed Unit = HZ): continue to screen ID # 145. – (Single pump and #running pump = 1 and Motor Speed Unit = RPM): continue to screen ID # 146. – (Single pump and #running pump = 1 and Motor Speed Unit = HZ): continue to screen ID # 147. • Not Constant Speed: continue to screen ID #148.
143	Sensor Fault Function Constant Speed	[Off] [Stop] [Stop and Trip]	[19–40] = selection	See the above screen ID #142.
144	Number of Pumps Runni... 1 AZF Speed [RPM] 0 RPM	[1, 2, 3 or 4] [RPM]	[19–41] = first selection [19–42] = second selection	Continue to screen ID #148.

130 Feedback Setup				
Screen ID No.	Screens	Selections	Parameters Setup Information	Screen Information
145	Numbe of Pumps Runni... 1 AZF Speed [Hz] 0.0Hz	[1, 2, 3 or 4] _____ [Hz]	[19–41] = first selection [19–42] = second selection	Continue to screen ID #148.
146	AZF Speed [RPM] 0RPM	_____ [RPM]		Continue to screen ID #148.
147	AZF Speed [Hz] 0.0Hz	_____ [Hz]		Continue to screen ID #148.
148	Continue to the setpoint Setup? Yes	[Yes] [No]		• Yes: continue to the Setpoint Setup Screens table. • No: return to the Setup Selection screen ID #6 in Main-Menu Screens table.

7.5.12 Setpoint setup

The Setpoint setup can be configured for up to two setpoints from [20-21] and [19-84] for the Booster pump application type. For the HVAC pump application type, the number of setpoints is based on the number of feedbacks selected in the Feedback setup and cannot be changed in the Setpoint setup. Four setpoints can be selected from [20-21], [20-22], [20-23] and [19-83], and four alternate setpoints can be selected from [19-84], [19-85], [19-86] and [19-87].

Setpoint 2 in the Booster pump application or alternative setpoints in the HVAC pump application will be selected through digital input 33 by setting [5-15] **Terminal 33 Digital Input** to MCO Specific.

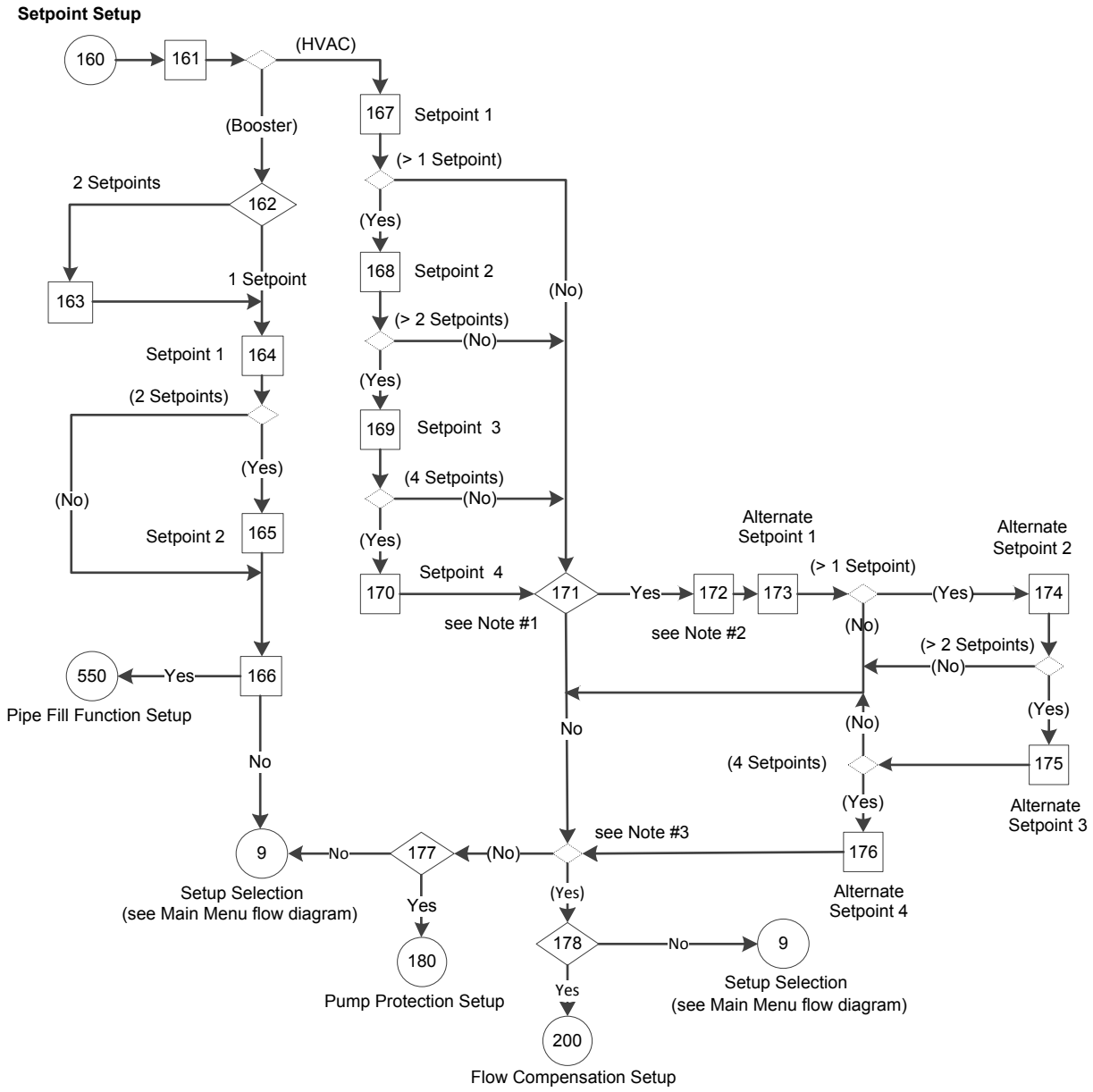

Figure 108: Setpoint Setup Flow Diagram

Setpoint Setup Flow Diagram notes:

- Note #1: Enable Alternative Setpoint Selection screen.
- Note #2: Alternative Setpoints will be selectable thru Digital Input DI 33 message screen.
- Note #3: Was more than one Setpoint selected?

Table 47: Setpoint Setup Screens

160 Setpoint Setup				
Screen ID No.	Screens	Selections	Parameters Setup Information	Screen Information
161	Setup Selection Setpoint		(HVAC): If ([20-20] = Difference): • (Yes): # setpoint = 1 • (No): # setpoints = # feedbacks	• (Booster): continue to screen ID #162. • (HVAC): continue to screen ID #167.
162	Number of setpoints 1	[1, 2]	One setpoint: [5-15] = No operation.	• One setpoints: continue to screen ID #164. • Two setpoints: continue to screen ID #163.
163	Setpoints will be selected thru Digital Input DI 33 [OK]	[OK]	[5-15] = MCO Specific.	• Continue to screen ID #163.
164	Setpoint 1 15.000psi	____ [Unit]	[20-21] = entry.	• (One set point): continue to screen ID #166. • (Two setpoints): continue to screen ID #165.
165	Setpoint 2 0.000	____ [Unit]	[19-84] = selection.	Continue to screen ID #166.
166	Continue to Pipe Fill Function Setup? Yes	[Yes] [No]		• Yes: continue to the Pipe Fill Function Setup Screens table. • No: continue to the Setup Selection screen ID #6 in the Main Menu Screens table.

160 Setpoint Setup				
Screen ID No.	Screens	Selections	Parameters Setup Information	Screen Information
167	Setpoint 1 15.000psi	____ [Unit]	[20-21] = entry.	• (One set point): continue to screen ID #171. • (Two setpoints): continue to screen ID #168.
168	Setpoint 2 0.000	____ [Unit]	[2-22] = selection.	• (Two setpoints): continue to screen ID #171. • (More than two setpoints): continue to screen ID #169.
169	Setpoint 3 0.000psi	____ [Unit]	[20-23] = entry in Setup 1	• (Three setpoints): continue to screen ID #171. • (More than three setpoints): continue to screen ID #170.
170	Setpoint 4 0.000	____ [Unit]	[19-83] = entry.	Continue to screen ID #171.
171	Enable Alternative Setpoint Selection? Yes	[Yes] [No]	No: [5-15] = No operation.	• Yes: continue to screen ID #172. • No: – If (Number of Setpoints > 1): continue to screen ID #177. – Else: continue to screen ID #178.
172	Alternative Setpoints will be selectable thru Digital Input DI 33 [OK]	[OK]	[5-15] = MCO Specific.	Continue to screen ID #173.

160 Setpoint Setup				
Screen ID No.	Screens	Selections	Parameters Setup Information	Screen Information
173	Alt. Setpoint 1 0.000	____ [Unit]	[19-84] = selection.	• (One setpoint): see the No condition in the above screen ID #171. • (More than one setpoint): continue to screen ID #174.
174	Alt. Setpoint 2 0.000	____ [Unit]	[19-85] = selection.	• (Two setpoints): see the No condition in the above screen ID #171. • (More than two setpoints): continue to screen ID #175.
175	Alt. Setpoint 3 0.000	____ [Unit]	[19-86] = selection.	• (Three setpoints): see the No condition in the above screen ID #171. • (Four setpoints): continue to screen ID #176.
176	Alt. Setpoint 4 0.000	____ [Unit]	[19-87] = selection.	See the No condition in the above screen ID #171.
177	Continue to Pump Protection Setup? Yes	[Yes] [No]		• Yes: continue to the Pump Protection Setup Screens table. • No: return to the Setup Selection screen ID #6 in Main Menu Screens table.
178	Continue to Compensation Setup? Yes	[Yes] [No]		• Yes: continue to the Flow Compensation Screens Setup Screens table. • No: return to the Setup Selection screen ID #6 in Main Menu Screens table.

7.5.13 Pipe Fill Function setup

In water supply systems water hammering can occur when filling the pipes too fast. It is therefore desirable to limit the filling rate. Pipe Fill Mode eliminates the occurrence of

water hammering associated with the rapid exhausting of air from the piping system by gradually filling the pipes at a low rate.

This function is used in horizontal, vertical and mixed piping systems. Due to the fact that the pressure in horizontal pipe systems does not climb as the system fills, filling horizontal pipe systems requires a user specified speed to fill, for a user specified time and/or until a user specified pressure set-point is reached.

Notes: See the 19-parameter descriptions in*Group 19 parameter descriptions* on page 94 for: • Speed Step: parameter [19-92] • Steady Time: parameter [19-93] • Dead Band: parameter [19-94] • Pipe Fill Max Pump: parameter [19-95]

Pipe Fill Function

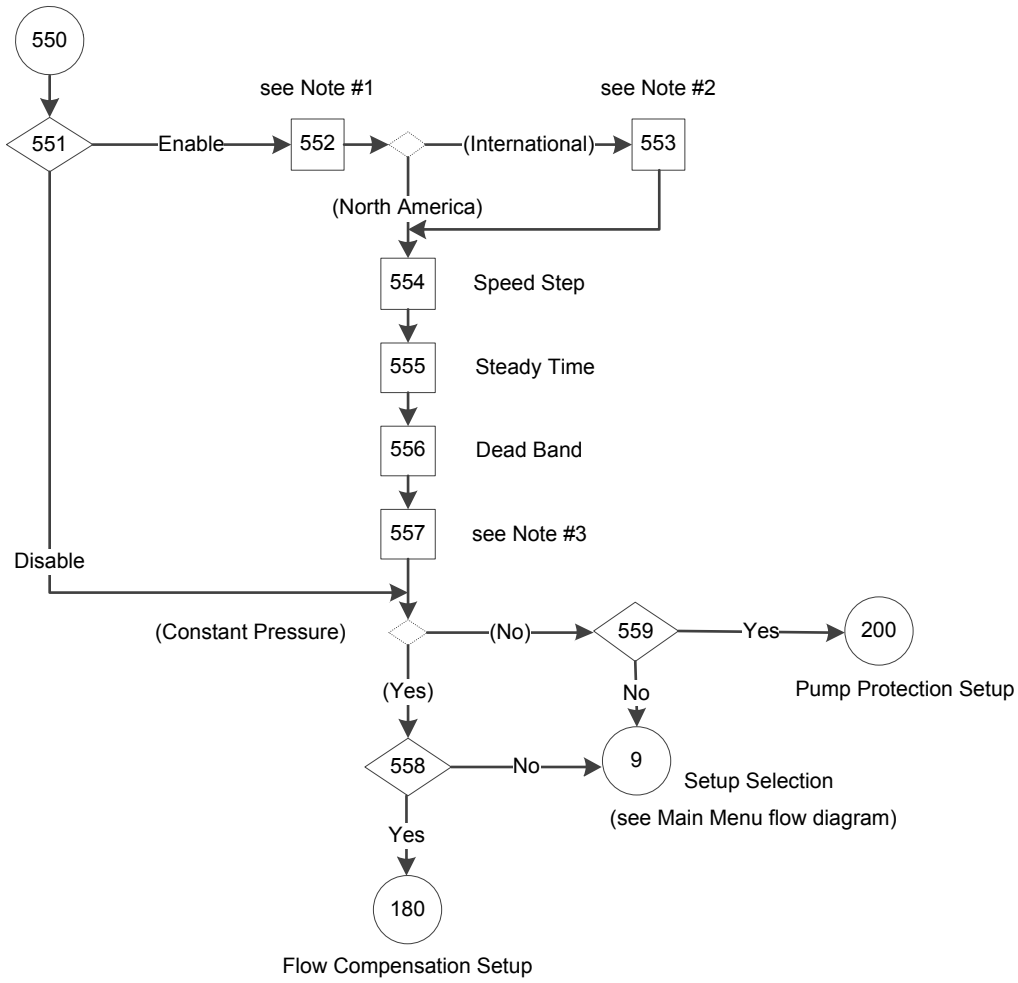

Figure 109: Pipe Fill Function Flow Diagram

Pipe Fill Function Flow Diagram notes:

Note #1: Trigger Pressure

Note #2: Low System Limit and Low System Delay

Note #3: Pipe Fill Max Pumps

Table 48: Pipe Fill Function Screens

550 Pipe Fill Function				
Screen ID No.	Screens	Selections	Parameters Setup Information	Screen Information
551	Pipe Fill Function Enable	[Enabled] [Disabled]	• Enabled: [19-90] = Enable. • Disabled: [19-90] = Disable.	• Enabled: continue to screen ID #552. • Disabled: – (Application type = Constant Pressure): continue to screen ID #557. – (Application type ≠ Constant Pressure): continue to screen ID #558.
552	Triggered Pressure 0.000	____ [Unit]	[19-91] = selection. If (International): • (Low System Fault=Disabled): [19-45]=Manual Reset Alarm, [19-47]=30 sec, [19-48]=600 sec, [19-49]=1. • (Low System Fault=Enabled): [19-46]=[19-91].	(North America): continue to screen ID #554. (International): continue to screen ID #553.
553	Low System Limit 0.00 Low System Delay 30secs	Low System Limit _____ [Unit] Low System Delay _____ secs	[19-46]=selection 1 [19-47]=selection 2	Continue to screen ID#554.
554	Speed Step 0%	____ %	[19-92] = selection.	Continue to screen ID #555.
555	Steady Time 0secs	____ sec	[19-93] = selection.	Continue to screen ID #556.

550 Pipe Fill Function				
Screen ID No.	Screens	Selections	Parameters Setup Information	Screen Information
556	Dead Band 0.000	____ [Unit]	[19-94] = selection.	Continue to screen ID #557.
557	Pipe Fill Max Pump 0	____	[19-95] = selection.	• (Application type = Constant Pressure): continue to screen ID #558. • (Application type ≠ Constant Pressure): continue to screen ID #559.
558	Continue to Flow Compensation Setup Yes	[Yes] [No]		• Yes: continue to the Flow Compensation Setup Screens table. • No: continue to the Selection Setup in Main Menu Screens table.
559	Continue to Pump Protection Setup? Yes	[Yes] [No]		• Yes: continue to the Pump Protection Setup Screens table. • No: continue to the Selection Setup in the Main Menu Screens table.

7.5.14 Flow Compensation setup

As flow in a pumping system increases, the system friction head losses also increase. Friction head loss is higher in systems with increased pipe lengths or decreased pipe size. The impact of this head loss is that the pressure at different points in the system will vary depending on flow rate and the distance from the pump. The loss will be most significant in the zones farthest from the pump. The controller's internal Flow Compensation function is used to correct the effect of friction head loss in the system. The flow compensation function calculates a control curve based on pump and system parameters. The controller actively adjusts the setpoint along the control curve based on the speed of the pump. Since a change in speed is proportional to a change in flow, the controller effectively adjusts the setpoint based on a change in speed to compensate system friction loss.

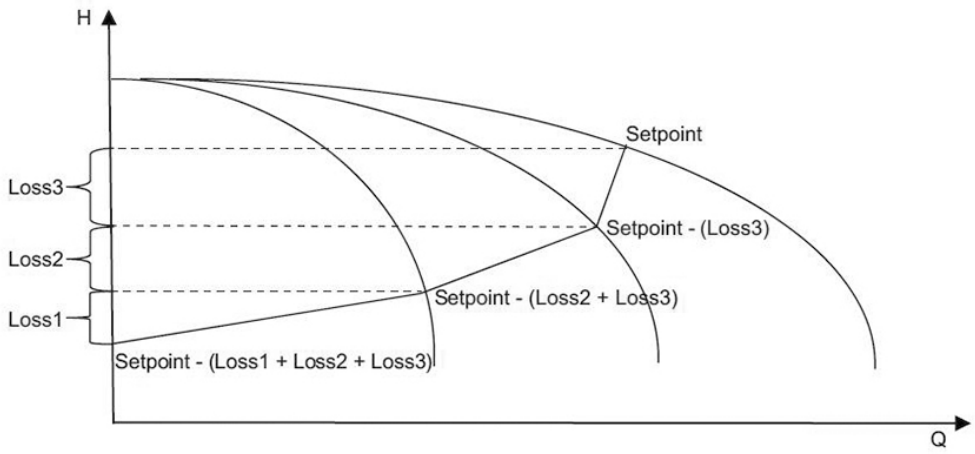

Figure 110: Flow Compensation Curve

NOTE: Setpoint in the above Flow Compensation Curve is the maximum control setpoint, will correspond to the controlling setpoint.

Table 49: Flow Compensation Parameters Setup

Parameter Number	Description	Set to
[19-12]	**Flow Compensation**	Enabled
[19-13]	**Friction Loss**	0.000 - 999,999.999
[19-14]	**Friction Loss 1**	0.000 - 999,999.999
[19-15]	**Friction Loss 2**	0.000 - 999,999.999
[19-16]	**Friction Loss 3**	0.000 - 999,999.999

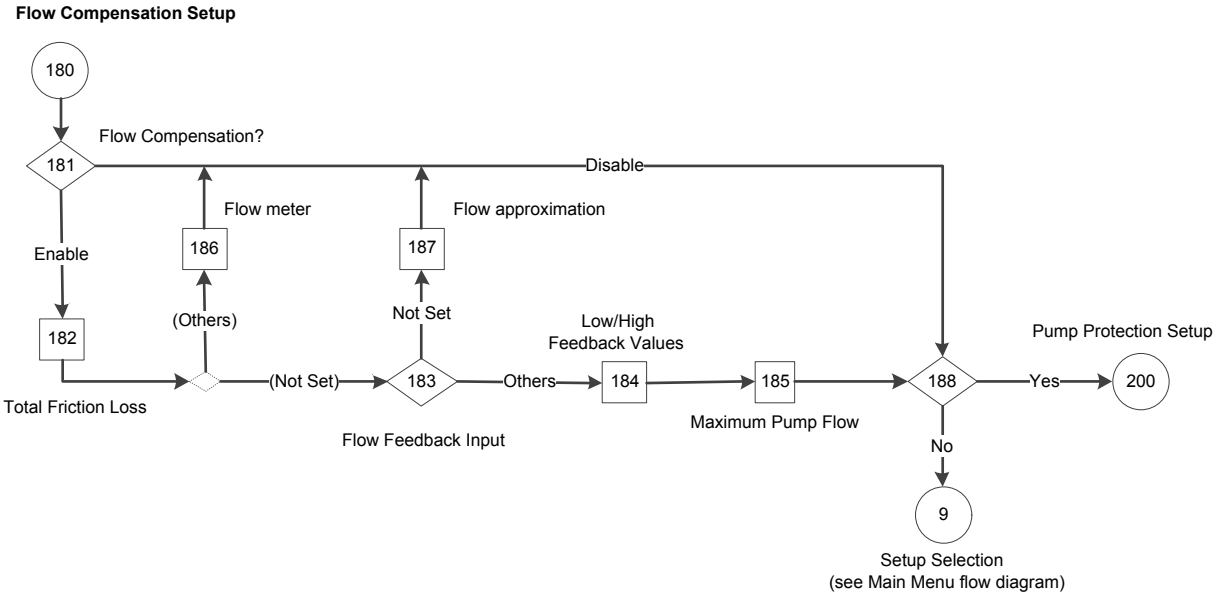

Figure 111: Flow Compensation Setup Flow Diagram

Table 50: Flow Compensation Setup Screens

180 Flow Compensation Setup				
Screen ID No.	Screens	Selections	Parameters Setup Information	Screen Information
181	Flow Compensation Enabled	[Enable] [Disable]	• Enable: [19-12] = Enable. • Disable: [19-12] = Disable.	• Enable: continue to screen ID #182. • Disable: continue to screen ID #188.
182	Total Friction Loss 0.000[unit]	____ [Unit]	[19-13] = selection.	[19-70] = Not Set: • Yes: continue to screen ID #183. • No: continue to screen ID #186.
183	Flow Feedback Input Not Set	[Not Set] [Analog Input 53] [Analog Input 54] [Analog Input X30/11] [Analog Input X30/12] [Analog Input X42/1] [Analog Input X42/3] [Analog Input X42/5]	[19-13] = selection. Note: All of the selections are available in [19-70].	[19-70] = Not Set: • Yes: continue to screen ID #187. • No: continue to screen ID #184.
184	Low Feedback Value 0.000 High Feedback Value 60.000	_____ [Unit] _____ [Unit]		Continue to screen ID #185.
185	Max. Pump Flow 0.000	_____	[19-73] = selection.	Continue to screen ID #188.
186	Flow meter will be used for compensation. [OK]	[OK]		Continue to screen ID #188.

180 Flow Compensation Setup				
Screen ID No.	Screens	Selections	Parameters Setup Information	Screen Information
187	Flow approximation will be used for compensation. [OK]	[OK]		Continue to screen ID #188.
188	Continue to Pump Protection Setup? Yes	[Yes] [No]		• Yes: continue to the Pump Protection Setup Screens table. • No: continue to the Setup Selection screen ID #6 in the Main Menu Screens table.

7.5.15 Pump Protection setup

The Pump Protection Setup can be configured for Sleep Mode, No Water/Loss of Prime, Suction Protection, System Protection and Digital I/O Protection for Booster pump application type, or System Protection and Digital I/O Protection for HVAC pump application type, or Sleep Mode, No Water/Loss of Prime, Suction Protection and Digital I/O Protection for Speed Control operating mode.

On the single drive, Pump Protect will utilize existing “Pump Protect” functionality, the controller will incorporate an Emergency Stop function through digital input. When the input is open, the controller will stop and issue a “Pump Protect/External Interlock” fault. When the input is closed after a fault, the controller will not be started until the reset button is pressed or if power is cycled. When digital input is assigned to Pump Protect/ External Interlock and the signal is removed from that digital input, the drive will stop and “Pump Protect/External Interlock” alarm will be displayed.

On Multi-Pump systems, the following behavior will be implemented, when any of the drives fires “Pump Protect/External Interlock” alarm, that drive will be stopped, taken out of staging / alternation sequence and display “Pump Protect/External Interlock” alarm. The rest of the system will continue normal operation.

On Cascade system, when master drive fires “Pump Protect/External Interlock” alarm, the entire system will be stopped and master drive will display “Pump Protect/External Interlock” alarm.

NOTE: Pump Protect/External Interlock alarm is not resettable until signal on the digital input is reapplied. After signal is reapplied the reset or auto-reset must be applied on the drive that displays “Pump Protect/External Interlock” alarm, for the normal operation to continue.

Pump Protection Setup

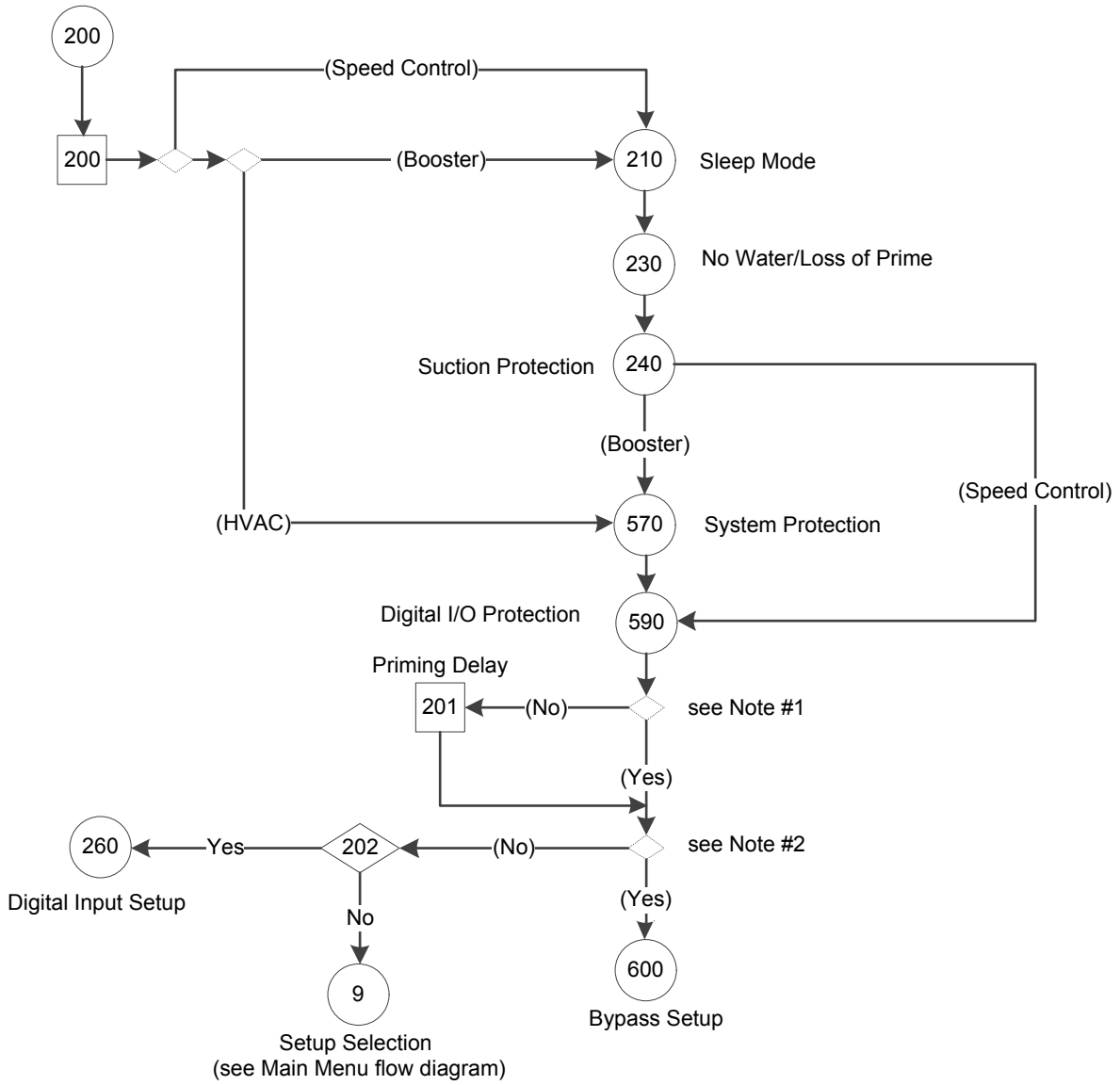

Figure 112: Pump Protection Setup Flow Diagram

Pump Protection Setup flow diagram notes:

- Note #1: (Parameters [19-20] & [19-45] = Disabled & [22-50] = Off?)
- Note #2: Bypass Panel is detected and functioning

Table 51: Pump Protection Setup Screens

200 Pump Protection Setup				
Screen ID No.	Screens	Selections	Parameters Setup Information	Screen Information
200	Setup Selection Pump Protection		(Not Speed Control): • (Booster & Flow Control) – [19-24] = [0] Disabled, [22-23] = Off. • (HVAC): [19-24] = [19-20] = [19-32] = [19-36] = [0] Disabled, [22-23] = Off, [19-30] = [0] Not Set.	• (Not Speed Control): – (Booster): continue to the Sleep Mode, No Water/Loss of Prime, Suction Protection, System Protection, Digital I/O Protection Setup Screens tables respectively. – (HVAC): continue to the System Protection and Digital I/O Protection Setup Screens tables respectively. • (Speed Control): continue to the Sleep Mode, No Water/Loss of Prime, Suction Protection, and Digital I/O Protection Setup Screens tables respectively. • ([19-20] = [19-45] = [0] Disabled and [22-50] = [0] Off): – (Yes): continue to the output of screen ID #201 to verify if a Bypass drive is available. – (No): continue to screen ID #201. ([19-20] = [19-45] = [0] Disabled and [22-50] = [0] Off): • (Yes): continue to the output of screen ID #201 to verify if a Bypass panel is available. • (No): continue to screen ID #201.

200 Pump Protection Setup				
Screen ID No.	Screens	Selections	Parameters Setup Information	Screen Information
201	Priming Delay 0secs	_____sec	[19-97] = entry.	If a Bypass panel was detected and functioning: • Yes: continue to the Bypass Setup Screens table. • No: continue to screen ID #202.
202	Continue to Digital Input Setup? Yes	[Yes] [No]		• Yes: continue to the Digital Input Setup Screens table. • No: continue to the Setup Selection screen ID #6 in the Main Menu Screens table.

7.5.15.1 Sleep Mode setup

Sleep Mode protects the pump by turning off the pump in cases where there is no flow in the system. Sleep mode is only available in Booster and Speed Control operating modes and can be enabled or disabled at the [19–24] **No Flow Shutdown**. If Sleep Mode is disabled the pump will not turn off during a no flow condition if no other control devices are present to turn the pump off. The [4–12] **Sleep Frequency/Low Limit [Hz]** (North America) and [22–24] **Sleep Delay** (North America) and **No-Flow Delay** (International) are set first depending on the Operating Mode, Speed Control (RPM/Hz) or other modes. The [4–11] **Motor Speed Low Limit [RPM]** or [4–12] **Sleep Frequency/Low Limit [Hz]** is the frequency that the pump has to reach or fall below in order to enter sleep mode. The Sleep Frequency is also the minimum frequency. The Sleep Delay is the amount of time the pump speed must be at or below the Sleep Frequency in order to enter Sleep Mode. Use this parameter to prevent the pump from entering sleep mode too soon.

For Speed Control operating mode, [22–42] **Wake-up Speed [RPM]** or [22–43] **Wake-up Speed [Hz]** can be changed.

For the other operating modes, the [19–25] **No Flow Restart Difference** is the difference between the setpoint and the actual value that will cause the pump to restart (wake up) from sleep mode. This value is entered as an absolute value. For example, if the setpoint is 50 psi and an absolute value 5.000 No Flow Restart Difference is entered, the pump will restart from sleep mode after the system pressure drops 5 psi below the set pressure (45 psi). If multiple setpoints are used then a Restart Difference is the same for all setpoints.

The [22–40] **Minimum Run Time** and [22–41] **Minimum Sleep Time** can be used to prevent rapid cycling. The [22–40] **Minimum Run Time** forces the pump to stay on and not enter sleep mode until the pump runs for the time entered in [22–40] **Minimum Run Time**. The [22–41] **Minimum Sleep Time** forces the pump to stay in sleep mode (turned off) for the time entered in [22–41] **Minimum Sleep Time**.

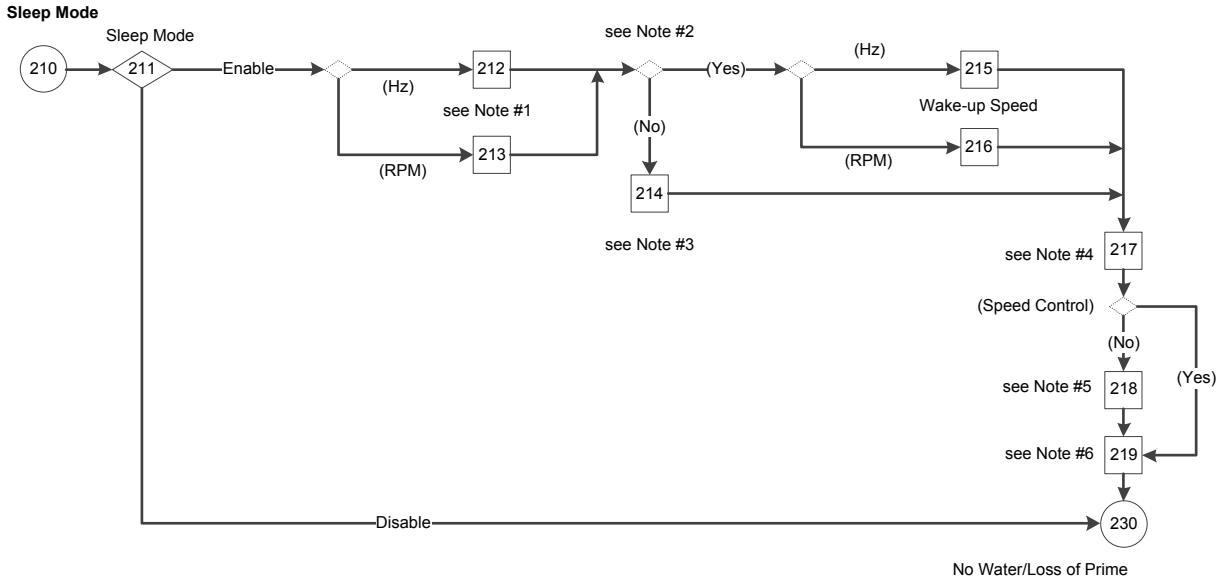

Figure 113: Sleep Mode Flow Diagram

Sleep Mode flow diagram notes:

- Note #1: Minimum/Sleep Frequency (Hz)/Speed (RPM) and Sleep Delay dual parameter screens.
- Note #2: (Operating mode = Speed Control?) condition.
- Note #3: No Flow Restart Difference parameter screen.
- Note #4: Minimum Run Time/Sleep Time dual parameter screen.
- Note #5: Flow Check Window & Time.
- Note #6: Enabling Sleep Mode information.

Table 52: Sleep Mode Screens

210 Sleep Mode				
Screen ID No.	Screens	Selections	Parameters Setup Information	Screen Information
211	Sleep Mode Enable	[Enable] [Disable]	• Disable: [19-24] = [22-21] = [22-22] = [0] Disabled, [22-23] = [0] Off. • Enable: – (North America): [22-21]=Enabled. If (Speed Control): [19-24]=[0] Disabled, [22-22]=Disabled, [22-23]=Sleep Mode. Else [19-24]=[1] Enabled, [22-22]=Disabled, [22-23]=Off. – (International): If (Speed Control): [19-24]=[0] Disabled, [22-22]=Enabled, [22-23]=Sleep Mode. Else [19-24]=[1] Enabled, [22-22]=Disabled, [22-23]=Off.	• Enable: – ([0-02] = Hz): continue to screen ID #212. – ([0-02] = RPM): continue to screen ID #213. • Disable: see screen ID #218.
212	Minimum/Sleep Frequen 18.0Hz Sleep Delay 3s	_____ [Hz] _____s	[4-12] = first entry. [22-24] = second entry.	• (Speed Control): – ([0-02] = Hz): continue to screen ID #215. – ([0-02] = RPM): continue to screen ID #216. • (Not Speed Control): continue to screen ID #214.
213	Minimum/Sleep Speed 540RPM Sleep Delay 3s	_____ [RPM] _____s	[4-11] = first entry. [22-24] = second entry.	Continue to the output of screen ID #212 to check the operating mode.

210 Sleep Mode				
Screen ID No.	Screens	Selections	Parameters Setup Information	Screen Information
214	No Flow Restart Difference 0.000	_____	[19-25] = entry.	Continue to screen ID #217.
215	Wake-up Speed 30.0Hz	_____ [Hz]	[22-43] = entry.	Continue to screen ID #217.
216	Wake-up Speed [Hz] 900RPM	_____ [RPM]	[22-42] = entry.	Continue to screen ID #217.
217	Minimum Run Time 10s Minimum Sleep time 10s	_____s _____s	[22-40] = first entry. [22-41] = second entry.	• (Not Speed Control): continue to screen ID #218. • (Speed Control): continue to screen ID #219.
218	Flow Check Window 0.00% Flow Check Time 10mins	_____ % _____ mins	[3-10.0] = first entry [13-20.0] = second entry * 60,000	Continue to screen ID # 219.
219	"To enable Sleep Mode based on power consumption, No Flow Power Calibration must be run on all pumps in the system."	[OK]		Continue to the No Water/ Loss of Prime Setup Screens table.

7.5.15.2 No Water/Loss of Prime setup

The No Water/Loss of Prime function is used to protect the pump against running dry and/or loss of prime. The function works by monitoring power at full speed and comparing the actual power to a preset limit. If the actual power falls below this preset limit for a specified amount of time, the No Water/Loss of Prime alarm is issued. If the No Water/Loss of Prime function is disabled, the pump will not be protected against running dry and/or loss of prime.

The [22–39] **No Water/Loss of Prime Limit [HP]** (North America) / [22-38] **High Speed Power [kW]** (International) is the no flow power value that corresponds to the speed entered in [22–37] **High Speed [Hz]**. The No Flow Power Calibration Set-up automatically enters 85% of the [4–14] **Motor Speed High Limit [Hz]** in [22–37] **High Speed [Hz]**.

When the pump is running at full speed and the actual power consumed by the pump is less than or equal to this value for a specified amount of time, the No Water/Loss of Prime alarm is issued. It is recommended to set this value by performing the No Flow Power Calibration Setup.

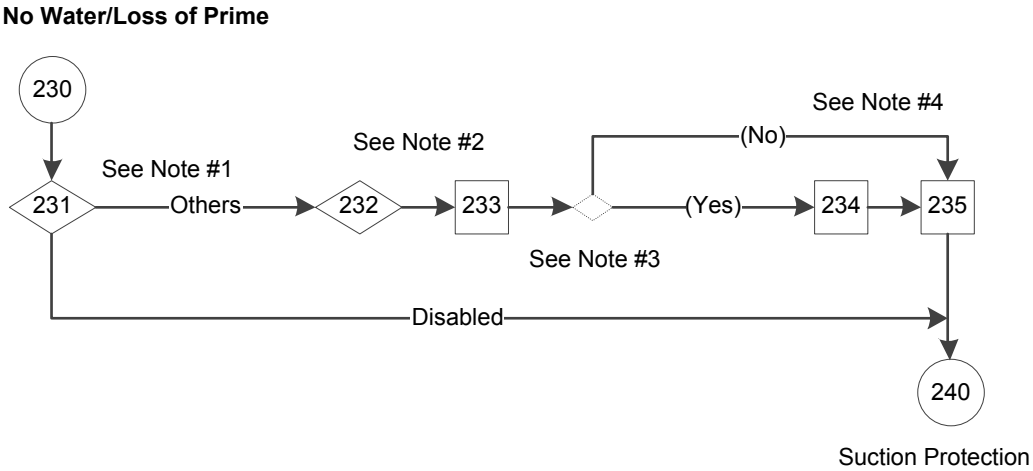

Figure 114: No Water/Loss of Prime Flow Diagram

No Water/Loss of Prime flow diagram notes:

- Note #1: No Water/Loss of Prime Fault selection screen.
- Note #2: Run the No Flow Power Calibration Setup selection screen and No Water/Loss of Prime Protection Delay parameter screen.
- Note #3: (No Water Loss of Prime Fault) condition.
- Note #4: No Water Loss of Prime Restart Time/Attemps dual parameter screen and enabling No Water Loss of Prime functionality information.

Table 53: No Water/Loss of Prime Setup Screens

230 No Water/Loss of Prime Setup				
Screen ID No.	Screens	Selections	Parameters Setup Information	Screen Information
231	No Water/Loss of Prime Fault Warning	[Disabled] (0) [Warning] (1) [Alarm] (2) [Man. Reset Alarm] (3)	[19-20] = selection.	• Disabled: continue to screen ID #235. • Others: continue to screen ID #232.
232	Run the No Flow Power Calibration Setup? Off	[Yes] [No]	Yes: [22-21] = Enabled. After Low Power Auto Setup was run, [8-13] = return screen, [22-20] = Enabled.	Continue to screen ID #233.

230 No Water/Loss of Prime Setup				
Screen ID No.	Screens	Selections	Parameters Setup Information	Screen Information
233	No Water/Loss of Prime Protection Delay 0secs	_____s	[19-21] = entry.	([19-20] = [2] Alarm): • (Yes): continue to screen ID #234. • (No): continue to screen ID #235.
234	NWLP Restart Time 10mins NWLP Restart Attempts 3	_____secs _____	[19-22] = first entry. [19-23] = second entry.	Continue to screen ID #235.
235	"To enable No Water / Loss of Prime functionality, No Flow Power Calibration must be run on all pumps in the system."	[OK]		Continue to the Suction Protection Screens table.

7.5.15.3 Suction Protection setup

The Suction Protection provides the choice to select action against the High suction / Low suction condition at the suction area. A transducer must be connected at suction area to measure live pressure of suction inlet.

- Low Suction Cut-out provides protection from running pump dry using a suction pressure transducer. This feature works in conjunction with No Water/Loss of Prime protection which determines dry pump state based on power consumption.
- High Suction Cut-out provides protection from running pump when there is sufficient suction pressure to meet system pressure requirements.

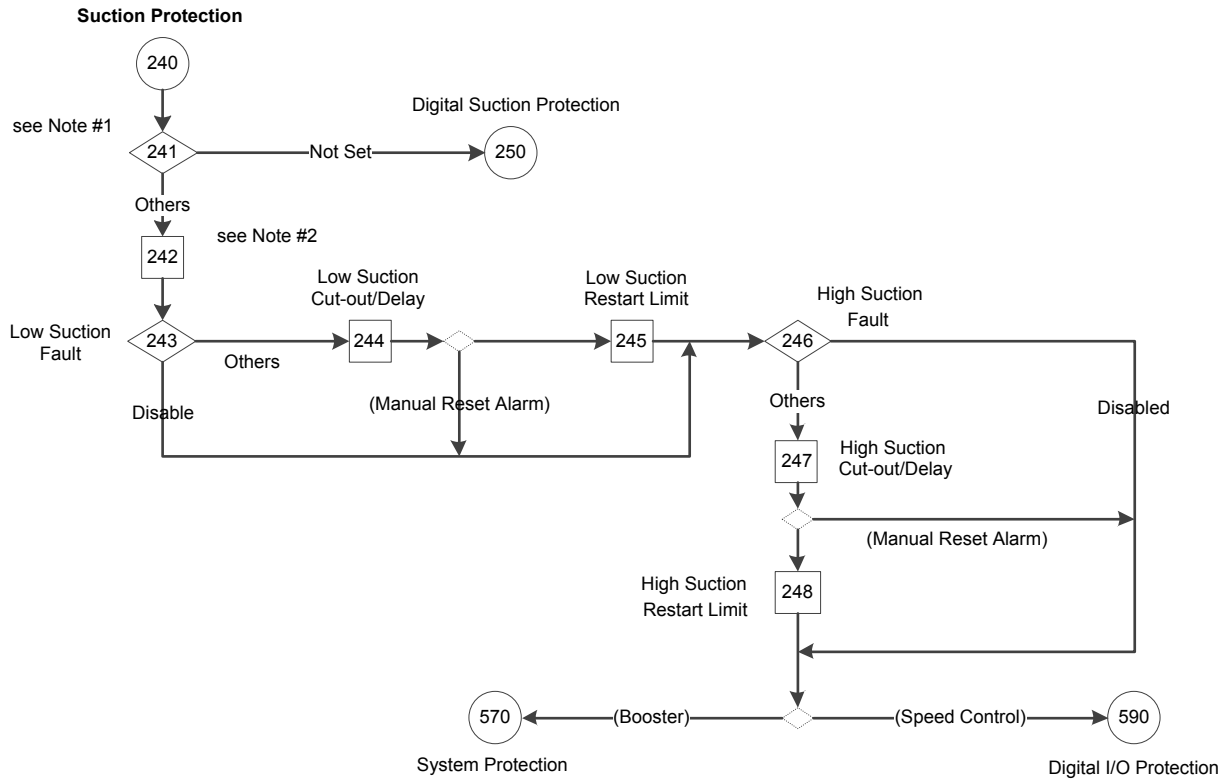

Figure 115: Suction Protection Flow Diagram

Suction Protection flow diagram notes:

- Note #1: Suction Input selection screen.
- Note #2: Low/High Feedback Value dual selection screen.

Table 54: Suction Protection Screens

240 Suction Protection				
Screen ID No.	Screens	Selections	Parameters Setup Information	Screen Information
241	Suction Input Analog input 54	[Not Set] [Analog Input 53] [Analog Input 54] [Analog Input X30/11] [Analog Input X30/12] [Analog Input X42/1] [Analog Input X42/3] [Analog Input X42/5]	[19-30] = selection. Note: The selections are available in [19-30] selection list, minus selection in [19-70], [20-00], [20-03], [20-06], [19-80].	• Not Set: continue to the Digital Suction Protection Setup Screens table. • Other selections: continue to screen ID #242.
242	Low Feedback Value 0.000 High Feedback Value 300.000	_____ [Unit] _____ [Unit]	• Selected low-feedback value [6-14] or [6-24] or [6-34] or [6-44] or [26-14] or [26-34] = first entry. • Selected high-feedback value [6-25] or [6-35] or [6-45] or [26-15] or [26-25] or [26-35] = second entry.	Continue to screen ID #243.

240 Suction Protection				
Screen ID No.	Screens	Selections	Parameters Setup Information	Screen Information
243	Low Suction Fault Alarm	[Disabled] (0) [Warning] (1) [Alarm] (2) [Man. Reset Alarm] (3)	[19-32] = selection.	• Disabled: continue to screen ID #246. • Other selections: continue to screen ID #244.
244	Low Suction Cut-out 0.000 Low Suction Delay 0secs	_____ [Unit] _____ secs	[19-33] = first entry. [19-34] = second entry.	• (Low Suction Cut-out = Man Reset Alarm): – (Yes): continue to screen ID #246. – (No): continue to screen ID #245.
245	Low Suction Restart Limit 0.000	_____ [Unit]	[19-35] = entry.	Continue to screen ID #246.
246	High Suction Fault Alarm	[Disabled] (0) [Warning] (1) [Alarm] (2) [Man. Reset Alarm] (3)	[19-36] = selection.	• Disabled: see screen ID #248. • Other selections: continue to screen ID #247.
247	High Suction Cut-out 0.000 High Suction Delay 0secs	_____ [Unit] _____ secs	[19-37] = first entry. [19-38] = second entry.	(High Suction Cut-out = Man. Reset Alarm): • (Yes): return to Suction Protection in the Pump Protection Setup Screens table.
248	High Suction Restart Limit 0.000	_____ [Unit]	[19-39] = entry.	• (Booster and HVAC): continue to the System Protection Setup Screens table. • (Speed Control): continue to the Digital I/O Protection Screens table.

7.5.15.4 Digital Suction Protection setup

The Digital Suction Protection setup allows the user to set up suction related protection through the external digital input. If these suction protections are assigned through the

digital inputs then a Low suction protection action must apply to the digital pin 27 only and a High suction protection action must apply to the digital input pin 29 only.

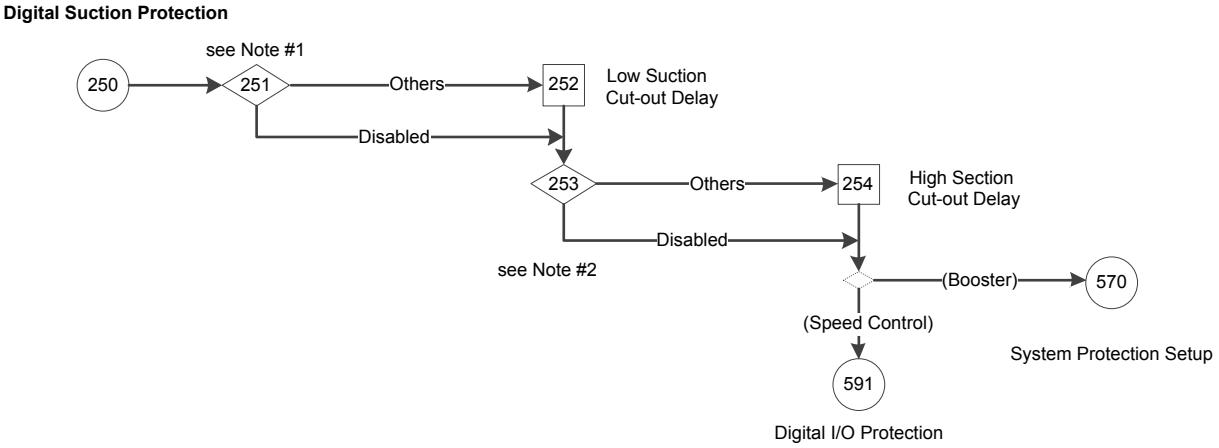

Figure 116: Digital Suction Protection Flow Diagram

Digital Suction Protection flow diagram notes:

- Note #1: Setup Low Suction Protection Through Digital Input 27 selection screen.
- Note #2: Setup High Suction Protection Through Digital Input 29 selection screen.

Table 55: Digital Suction Protection Screens

250 Digital Suction Protection				
Screen ID No.	Screens	Selections	Parameters Setup Information	Screen Information
251	Setup Low Suction Protection Through Digital Input 27? Warning	[Disabled] (0) [Warning] (1) [Alarm] (2) [Man. Reset Alarm] (3)	• [19-32] = selection. – Disabled: [5-12] = No Operation. – Other selections: [5-01] = Input, – [5-12] = [75] MCO Specific.	• Disabled: continue to screen ID #253. • Other selections: continue to screen ID #252.
252	Low Suction Cut-out Delay 0secs	_____ secs	[19-34] = entry.	Continue to screen ID #253.
253	Setup High Suction Protection Through Digital Input 29? Warning	[Disabled] (0) [Warning] (1) [Alarm] (2) [Man. Reset Alarm] (3)	• [19-36] = selection. – Disabled: [5-13] = No operation. – Other selections: [5-02] = Input, [5-13] = MCO Specific.	• Disabled: see screen ID #254. • Other selections: continue to screen ID #254.

250 Digital Suction Protection				
Screen ID No.	Screens	Selections	Parameters Setup Information	Screen Information
254	"High Suction Cut-out Delay"	_____ secs	[19-38] = entry.	• (Booster and HVAC): continue to the System Protection Setup Screens table. • (Speed Control): continue to the Digital I/O Protection Screens table.

7.5.15.5 System Protection setup

The System Protection function configures the setup for the Under Pressure, High/Low System Cut-out and System Restart functions.

Set the function to Warning to issue a warning message, to Alarm or Man. Reset Alarm or Stop and Trip to stop the controller and issue an alarm message. The alarm/warning can be reset manually from the LCP Reset key. The automatic reset attempts and delay between each reset can be set. Manual reset and automatic reset do not work in Trip and Lock condition that requires recycling power. Set the function to Off or Disabled to disable the function.

The [22–50] **Under Pressure Function** (North America) / **End of Curve Function** (International) protects the pump and system by preventing the pump from running below a specified low pressure for a specified amount of time. This function can protect the pump from damage caused by running at runout flow and/or can protect the system from unexpected leakage such as from an open valve or ruptured pipe.

NOTE: The Under Pressure Alarm will reset according to as per set in [19-48] **System Restart Time** & [19-49] **System Restart Attempts**, then requires manual reset after that.

To configure this function the [22–51] **Under Pressure Delay Time** (North America) / **End of Curve Delay** (International) and [22–52] **End of Curve Tolerance** must be set. The [22–51] **Under Pressure Delay Time** (North America) / **End of Curve Delay** (International) is the amount of time that the system pressure must be below the [22–52] **End of Curve Tolerance** before issuing the Under Pressure alarm or warning.

NOTE: Setting the [22–51] **Under Pressure Delay Time** (North America) / **End of Curve Delay** (International) less than the [22–27] **No Water/Loss of Prime Protection** (North America) / **Dry Pump Delay** (International) will cause the Under Pressure Alarm to trip before the No Water/Loss of Prime Alarm in cases where the pressure drop in the system is due to the pump running dry or losing prime. To avoid this set the [22–51] **Under Pressure Delay Time** (North America) / **End of Curve Delay** (International) longer than the [22–27] **No Water/Loss of Prime Protection** (North America) / **Dry Pump Delay** (International).

The [22–52] **End of Curve Tolerance** is the difference between the setpoint pressure and the actual pressure that will trigger the [22–50] **Under Pressure Function** (North America) / **End of Curve Function** (International). This pressure is set as a percent of the [20–14] **Maximum Reference/Feedb.**. For example, the [22–51] **Under Pressure Delay Time** is set to 10 seconds; the [22–52] **End of Curve Tolerance** is set to 10%, the pressure setpoint is set to 50 psi and the [20–14] **Maximum Reference/Feedb.** is set to 300 psi. If the system pressure falls below 20 psi (50 psi – (10% * 300 psi)) for more than 10 seconds, the controller will issue an Under Pressure Alarm or Warning. **Note:** parameter [3-03] **Maximum Reference** is required to set at the same speed of the parameter [4-14] **Motor Speed High Limit [Hz]**.

The Low/High system Cut-out fault will be displayed when the system pressure goes below/above a user specified value for a user specified amount of time respectively.

Select the advanced controller behavior on Low/High System Cut-out condition and delay before the controller asserts alarm/warning.

All system protection proof timer should be greater than live zero timer under Analog Input Section.

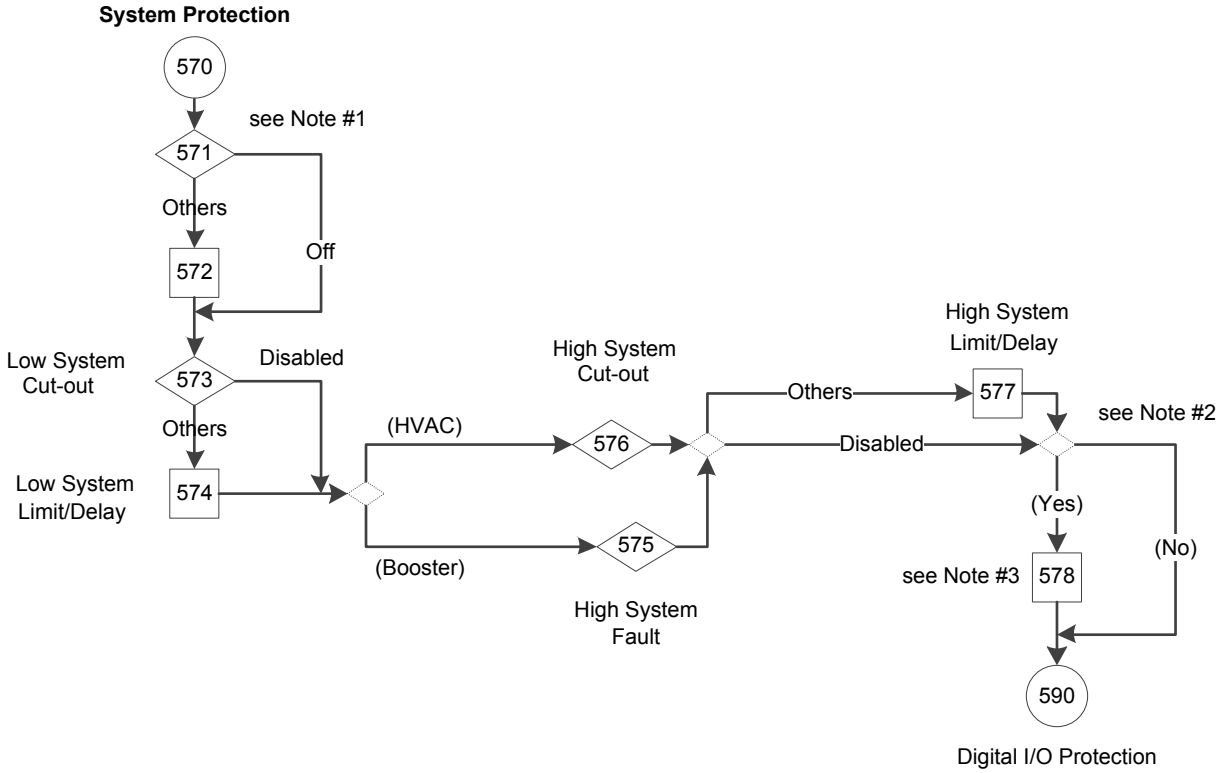

Figure 117: System Protection Flow Diagram

System Protection flow diagram notes:

- Note #1: Under Pressure Function selection screen and Under Pressure Delay/ Difference dual parameter screen.
- Note #2: ([19-26] or [19-45] or [22-50] = Alarm?) condition.
- Note #3: System Restart Time/Attempts dual parameter screen.

Table 56: System Protection Screens

570 System Protection				
Screen ID No.	Screens	Selections	Parameters Setup Information	Screen Information
571	Under Pressure Function Alarm	[Off] [Warning] [Alarm] [Man. Reset Alarm]	[22-50] = selection.	• Off: continue to screen ID #573. • Other selections: continue to screen ID #572.

570 System Protection				
Screen ID No.	Screens	Selections	Parameters Setup Information	Screen Information
572	Under Pressure Delay 30s Under Pressure Diff. 10.0%	_____ s _____ %	[22-51] = first entry. [22-52] = second entry.	Continue to screen ID #573.
573	Low System Cut-out Alarm Triplook	[Disabled] (0) [Warning] (1) [Alarm] (2) [Man. Reset Alarm] (3)	[19-45] = selection.	• Disabled: continue to the output of screen ID #547 for checking pump application type selection. • Other selections: continue to screen ID #574.
574	Low System Limit 0.000 Low System Delay 0secs	_____ [Unit] _____ secs	• [19-46] = first entry. • [19-47] = second entry.	• (Booster): continue to screen ID #575. • (HVAC): continue to screen ID #576.
575	High System Fault Alarm TripLock	[0] [Disabled] [1] [Warning] [2] [Alarm] [3] [Man. Reset Alarm]	[19-26] = selection.	• Disabled: continue to the output of screen ID #577 for checking alarm setups. • Other selections: continue to screen ID #577.
576	High System Cut-out Disable	[0] [Disabled] [1] [Enabled]	• Disabled: [19-26] = [0] Disabled. • Enabled: [19-26] = [4] Alarm TripLock.	• Disabled: continue to the output of screen ID #577 for checking alarm setups. • Enabled: continue to screen ID #577.
577	High System Limit 0.000 High System Delay 0secs	_____ [Unit] _____ secs	• [19-27] = first selection. • [19-28] = second selection.	([19-26] = [19-45] = [22-50] = Alarm): • (Yes): continue to screen ID #578. • (No): see screen ID #578.

570 System Protection				
Screen ID No.	Screens	Selections	Parameters Setup Information	Screen Information
578	System Restart Time 0secs System Restart Attempts 0	_____secs _____	• [19-48] = first selection. • [19-49] = second selection.	Continue to the Digital I/O Protection Setup Screens table.

7.5.15.6 Digital I/O Protection setup

The Digital I/O Protection setup activates the pump protection using external digital input. This digital input signal is indicating a fault condition external to the adjustable frequency drive. A "Pump Protect" has commanded the adjustable frequency drive to trip. The alarm can be reset using a digital input or the [RESET] key if the cause for the Protect/External Interlock has been removed.

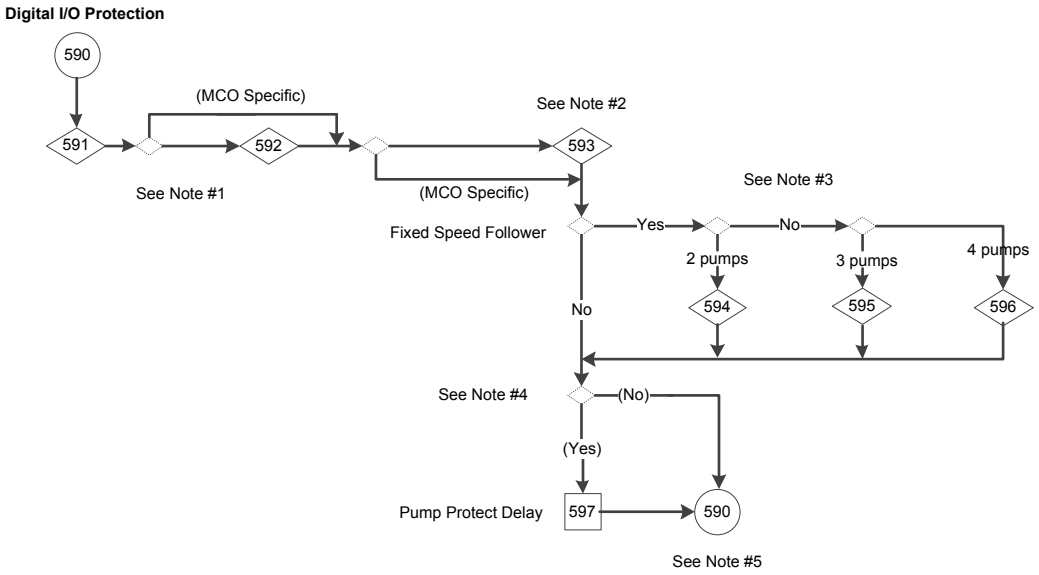

Figure 118: Digital I/O Protection Setup Flow Diagram

Digital I/O Protection Setup flow diagram notes:

- Note #1:
  - Setup Pump Protection Through Digital Input 19 selection screen.
  - (Terminal 27 Digital Input = MCO Specific) condition.
  - Setup Pump Protection Through Digital Input 27 selection screen.
- Note #2:
  - (Terminal 29 Digital Input = MCO Specific?) condition.
  - Setup Pump Protection Through Digital Input 29 selection screen.
- Note #3: Setup pump protection for 2, 3 and 4 pumps through digital inputs information screen.
- Note #4: Pump Protect Delay parameter screen.

Table 57: Digital I/O Protection Setup Screens

590 Digital I/O Protection Setup Control card, RS-485 serial communication				
Screen ID No.	**Screens**	**Selections**	**Parameters Setup Information**	**Screen Information**
591	Setup Pump Protection Through Digital Input 19? Yes	Yes No	• Yes: [5-11] = [7] Pump Protect/ External Interlock. • No: [5-11] = No operation.	[5-12] = [75] MCO Specific: • Yes: continue to the output screen ID #592 for checking [5-12] selection. • No: continue to screen ID #592.
592	Setup Pump Protection Through Digital Input 27? Yes	Yes No	• Yes: [5-12] = [7] Pump Protect/ External Interlock. • No: [5-12] = No operation.	(Was [5-13] = [75] MCO Specific?): • Yes: continue to the output screen ID #593 for checking [5-11], [5-12] and [5-13] selections. • No: continue to screen ID #593.
593	Setup Pump Protection Through Digital Input 29? Yes	Yes No	• Yes: [5-13] = [7] Pump Protect/ External Interlock. • No: [5-13] = No operation.	• If (Fixed Speed Follower): – 2 pumps: continue to screen ID #594. – 3 pumps: continue to screen ID #595. – 4 pumps: continue to screen ID #596. • Else if (any of [5-11], [5-12], [5-13], [5-16], [5-17], or [5-18] = [7] Pump Protect): – Yes: continue to screen ID #597. – No: see the return from Digital I/O Protection in the Pump Protection Setup Screens table.
594	Setup Pump 2 Protection Through Digital Input 2? Yes	Yes No	• Yes: [5-16] = [7] Pump Protect/ External Interlock. • No: [5-16] = No operation.	See else if condition in the above screen ID #593.

590 Digital I/O Protection Setup Control card, RS-485 serial communication				
Screen ID No.	Screens	Selections	Parameters Setup Information	Screen Information
595	Setup Pump 2 and Pump 3 Protection Through Digital Input 2 and Digital Input 3? Yes	Yes No	• Yes: [5-16] = [5-17] = [7] Pump Protect/ External Interlock. • No: [5-16] = [5-17] = No operation.	See else if condition in the above screen ID #593.
596	Setup Pump 2 ,Pump 3 and Pump 4 Protection Through Digital Input 2 Digital Input 3 and Digital Input 4? Yes	Yes No	• Yes: [5-16] = [5-17] = [5-18] = [7] Pump Protect/External Interlock. • No: [5-16] = [5-17] = [5-18] = No operation.	See else if condition in the above screen ID #593.
597	Pump Protect Delay 0s	_____ S	[22-00] = entry.	Return to the Pump Protection Setup Screen table for checking No Water/Loss of Prime Fault & Low System Fault & End of Curve Function before continuing to screen ID #201.

7.5.16 Bypass setup

The Start-Up Genie (Smart Setup) can be configured for Disabled, Automatic and digital, Automatic only, and Digital Input only. For a bypass panel to connect the motor to the drive or to the power line, isolate the drive's output from the power line or provide a time delay before going to bypass (not available for Lowara).

Each Drive Mode or Manual/Auto Bypass Mode has a specific symbol displayed on the top right line of the bypass LCP screen when it is activated:

- Drive Mode: 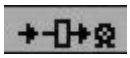

The motor is connected to and controlled by the drive.

- Manual/Auto Bypass Mode:

The motor operates at full speed across the line when a run command is present.

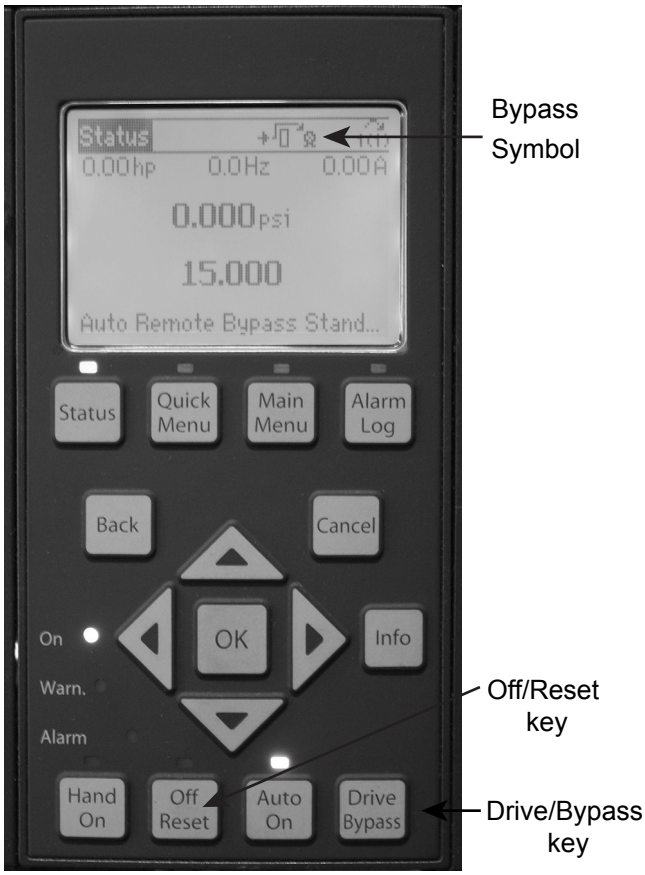

Pressing Drive Bypass key on the bypass LCP when the drive is in Drive Mode will show the Bypass and Drive Mode options on screen:

Press [OK] to change to Bypass Mode.

Press [Cancel] to stay to in Drive Mode.

Pressing Drive Bypass key on the bypass LCP when the drive is in Bypass Mode will show the Drive Mode and Bypass Mode options on screen:

Press [OK] to change to Drive Mode.

Press [Cancel] to stay to in Bypass Mode

- In Automatic and Digital configuration mode and Automatic only configuration mode, the bypass operation will be activated when any of the drive-related alarm is occurred. The number of bypass drives can be set through Start-Up Genie (Smart Setup) or

[19-59] **Bypass Run Pumps** on the failure of the number of drives set in [19-58] **Bypass Drives Fail**.

- In Digital Input only configuration mode, the Digital Input 32 is used for setting the number of pumps in [19-59] **Bypass Run Pumps** for bypass mode in remote area.

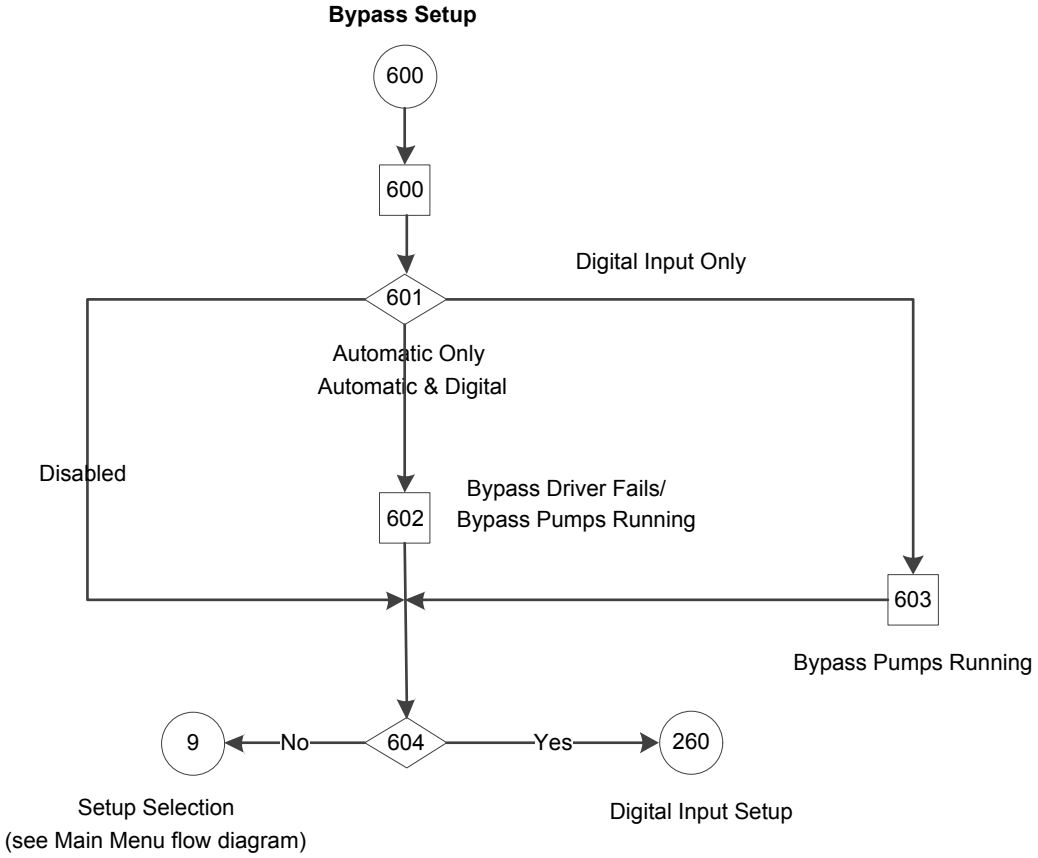

Figure 119: Bypass Setup Flow Diagram

Table 58: Bypass Setup Screens

240 Bypass Setup				
Screen ID No.	**Screens**	**Selections**	**Parameters Setup Information**	**Screen Information**
600	Setup Selection Bypass			• The Bypass Setup Selection is only available when a Bypass panel is detected and functioning. • Continue to screen ID #601.
601	Bypass Function Automatic Only	[Disabled] [Automatic and digital] [Automatic only] [Digital Input only]	• Disabled: [19-58] = [19-59] = 0, [31-01] = 5 sec, [31-02] = 0 sec. • If ([5-14] = [75] MCO Specific): [5-14] = No operation	• Disabled: continue to screen ID #604. • Automatic and digital or Automatic only: continue to screen ID #602. • Digital Input only: continue to screen ID #603.

240 Bypass Setup				
Screen ID No.	Screens	Selections	Parameters Setup Information	Screen Information
602	Bypass Drive Fail 2 Bypass Pumps Running 1	[1 - 4] [1 - 4]	[19-58] = first selection [19-59] = second selection [31-01] = 5 sec, [31-02] = 0 sec. • (Automatic only): [5-14] = No operation. • (Automatic and digital): [5-14] = [75] MCO Specific.	Continue to screen ID #604.
603	Bypass Pumps Running 1	[1 - 4]	• [19-59] = selection • [19-58] = 0 • [5-14] = [75] MCO Specific, [31-01] = 5 sec, [31-02] = 0 sec.	Screen Information: Continue to screen ID #604.
604	Continue to Digital Input Setup? No	[Yes] [No]		• Yes: continue to the Digital Input Setup Screens table. • No: return to the Setup Selection screen ID #6 in the Main-Menu Screens table.

7.5.17 Digital Input setup

Any unused digital input can be configured as part of the Digital Input Setup. A list of the digital inputs and their associated functions are shown below. The default function of a digital input can change based on the Operating Mode selected. Digital Input 18 is utilized as a Start function for all operating modes. This input has a dedicated function and cannot be configured in the Digital Input Setup.

NOTICE:

Only selections from the following list should be available for digital inputs in this section (if those selections are available for particular input). If previously selected value is not on the list, it should be reset to No Operation.

Table 59: Digital Input Selection List

[0]	No operation
[1]	Reset
[2]	Coast inverse
[3]	Coast and reset inverse
[5]	DC brake inverse
[6]	Stop inverse
[8]	Start
[9]	Latched start

[15]*	Preset reference on
[16]*	Preset ref bit 0
[17]*	Preset ref bit 1
[18]*	Preset ref bit 2
[19]*	Freeze reference
[20]*	Freeze output
[21]*	Speed up
[22]*	Slow
[34]	Ramp bit 0
[36]	Mains failure inverse
[37]	Fire mode
[52]	Run Permissive
[55]*	DigiPot Increase
[56]*	DigiPot Decrease
[57]*	DigiPot Clear
[60]	Counter A (up)
[61]	Counter A (down)
[62]	Reset Counter A
[63]	Counter B (up)
[64]	Counter B (down)
[65]	Reset Counter B
[66]*	Sleep mode
[121]	Lead Pump Alternation

* Only available when Operating mode is Speed Control

Table 60: Digital input functionality based on operating mode

Digital I/O		Operating Mode			
Terminal Number	Parameter Number	Single Pump	Speed Control	Test Run Mode	Description
18	[5–10]	[75] MCO Specific	[75] MCO Specific	[75] MCO Specific	Start/Stop digital input signal for the drive. Connect input to 24 V to start. Open the input to stop. This is a required connection. In Test Run Mode, this input starts the test run.

Digital I/O		Operating Mode			
Terminal Number	Parameter Number	Single Pump	Speed Control	Test Run Mode	Description
19	[5–11]	[0] No Operation	[0] No Operation	[0] No Operation	This input can be configured for use as a Pump Protect/External Interlock Warning or Alarm Input. Refer to the *Digital I/O Protection setup* on page 213 to enable the Warning or Alarm associated with the input.
27	[5–12]	[0] No Operation	[0] No Operation	[0] No Operation	This input can be configured for use as a Pump Protect/External Interlock Warning or Alarm input. Refer to the *Digital I/O Protection setup* on page 213 to enable the Warning or Alarm associated with this input.
29	[5–13]/[5–31]	[63] Comparator 3	[0] No Operation	[0] No Operation	Selectable for digital input or output. This input can be configured for use as a Pump Protect/External Interlock Warning or Alarm input. Refer to the *Digital I/O Protection setup* on page 213 for details.
32	[5–14]	[1] Restart	[0] No Operation	[0] No Operation	Configured for Bypass Automatic and Digital detection. Refer to the *Bypass setup* on page 215 for details.
33	[5–15]	[0] No Operation	[0] No Operation	[0] No Operation	Digital input. Configured for use as a Setpoint / Alternative setpoints select.
20	–	Common	Common	Common	Common for digital inputs and reference for 24 V supply

Digital input functionality based on operating mode:

Note: - If any of the below Digital Input pins assigned to [75] MCO Specific, Advanced controller will use only listed below function. (see the attached document).

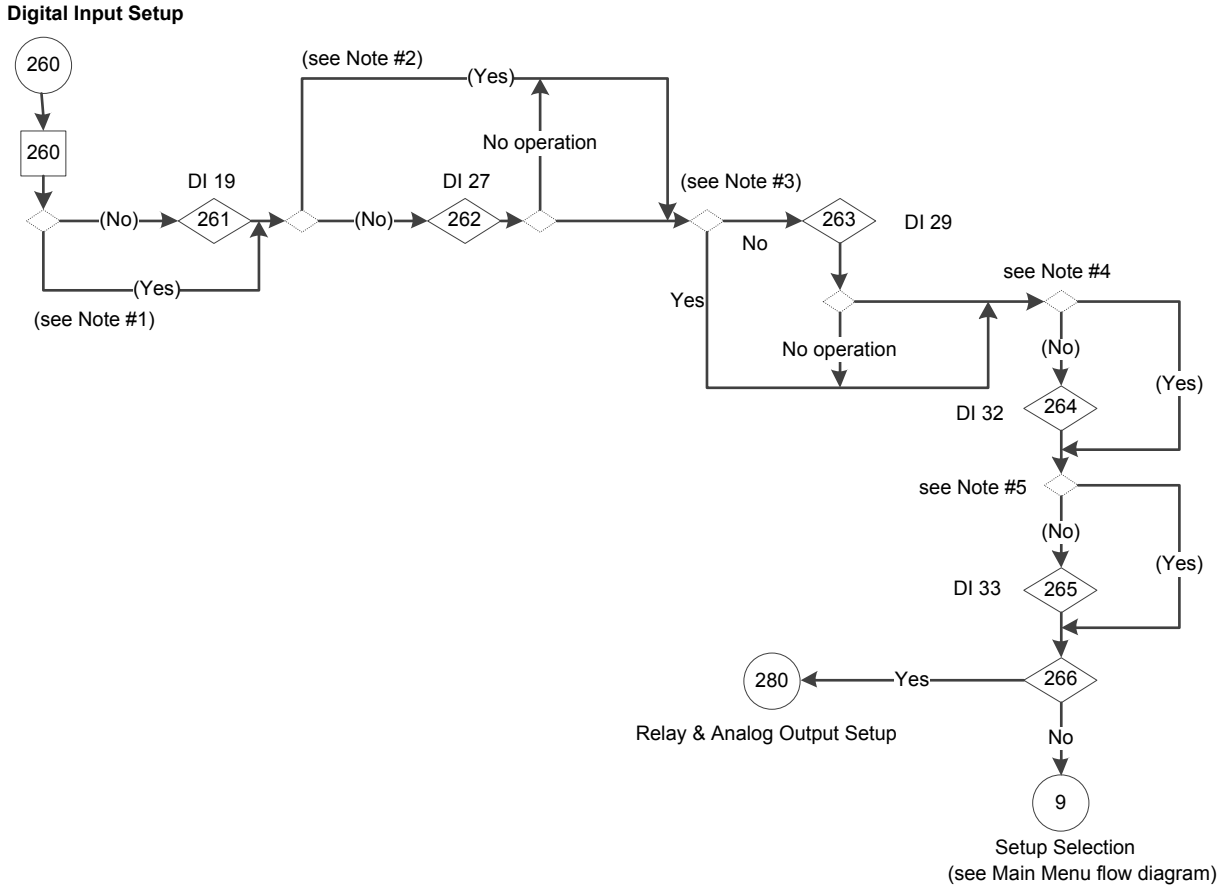

Figure 120: Digital Input Setup Flow Diagram

Digital Input Setup flow diagram notes:

- Note #1: (Terminal 19 Digital Input = Pump Protect/External Interlock?) condition.
- Note #2: (Terminal 27 Digital Input = Pump Protect/External Interlock or MCO Specific?) condition.
- Note #3: (Terminal 29 Digital Input = Pump Protect/External Interlock or MCO Specific?) condition.
- Note #4: (Terminal 32 Digital Input = MCO Specific?) condition.
- Note #5: (Terminal 33 Digital Input = MCO Specific?) condition.

Table 61: Digital Input Setup Screens

260 Digital Input Setup				
Screen ID	Screens	Selections	Parameters Setup Information	Screen Information
260	Setup Selection Digital Input		[5-11] = selection.	• Any unused digital input pin 19, 27, 29, 32 or 33 can be configured as part of the Digital Input Setup. • (Was [5-11] DI 19 = Pump Protect/ External Interlock?): – Yes: continue to the output of screen ID #261 for checking [5-12] DI 27 selection – No: continue to screen ID #261.
261	Terminal 19 Digital Input No operation	*Table 59: Digital Input Selection List* on page 218	[5-11] = selection	• (Was [5-12] DI 27= Pump Protect/ External Interlock or MCO Specific?): – (Yes): continue to the output of screen ID #262 for checking [5-13] DI 29 selection. – (No): continue to screen ID #262.
262	Terminal 27 Digital Input No operation	*Table 59: Digital Input Selection List* on page 218	• [5-12] = selection • If [5-12] Terminal 27 Digital Input ≠ No Operation: [5-01] = Input.	• (Was [5-13] DI 29= Pump Protect/ External Interlock or MCO Specific?): – (Yes): continue to the output of screen ID #263 for checking [5-14] DI 32 selection. – (No): continue to screen ID #263.
263	Terminal 29 Digital Input No operation	*Table 59: Digital Input Selection List* on page 218	• [5-13] = selection • [5-13] Terminal 29 Digital Input ≠ No Operation: [5-01] = Input.	(Was [5-14] DI 32 = MCO Specific?): • (Yes): continue to the output of screen ID #264 for checking the [5-15] DI 33 selection. • (No) continue to screen ID #264.

260 Digital Input Setup				
Screen ID	Screens	Selections	Parameters Setup Information	Screen Information
264	"Terminal 32 Digital Input"	*Table 59: Digital Input Selection List* on page 218	[5-14] = selection	• (Was [5-15] DI 33 = MCO specific?): – (Yes): continue to screen ID #266. – (No): continue to screen ID #265.
265	Terminal 33 Digital Input No operation	*Table 59: Digital Input Selection List* on page 218	[5-15] = selection	Continue to screen ID #266.
266	Continue to Relay and Analog Output Setup? Yes	[Yes] [No]		• Yes: continue to the Relay & Output Setup Screens table. • No: return to the Setup Selection screen ID #6 in the Main Menu

7.5.18 Relay and Analog Output setup

The Relay and Analog Output Setup allows configuration of the onboard relays and analog output signal.

7.5.18.1 Relay function

To configure the relay set the relay function. The relay function configures when the relay will change state. For example, when set to 'No Alarm', the relay will change state from the inactive to the active state when no alarms exist in the system. In the inactive state COM = NC and in the active state COM = NO.

Table 62: Relays selection list

Selection	Parameters [540.1] and [540.2] Values	Parameters [19–68] and [19–69] Values
No operation	[0] No operation	
System hydraulic alarm	[51] MCO Controlled	[1] System Pump alarm
System electric alarm	[51] MCO Controlled	[2] System VFD alarm
System warning	[51] MCO Controlled	[0] Sys alarm or warning
System running	[51] MCO Controlled	[3] System running
Sensor Fault	[51] MCO Controlled	[4] Sensor Fault
Suction alarm	[51] MCO Controlled	[5] Suction alarm
Discharge alarm	[51] MCO Controlled	[6] Discharge alarm
Sleep mode	[51] MCO Controlled	[7] Sleep mode
System Bypass	[51] MCO Controlled	[8] System Bypass
All Zone Failure	[51] MCO Controlled	[9] All Zone Failure
Pump running	[5] Running	

Selection	Parameters [540.1] and [540.2] Values	Parameters [19–68] and [19–69] Values
Bus OK	[26] Bus OK	
Pump Protect/External Interlock	[35] Pump Protect (North America)/ External Interlock (International)	
No Alarm	[160] No Alarm	

NOTE: Selection list for relays is in column "Selection" in the above Relays Selection List table. Columns 2 & 3 provide values for [5-40.0]and [19-68] for Relay 1 and [5-40.1] and [19-69] for Relay 2.

NOTE: The values in [19-68] and [19-69] are ignored unless the relay is set to "MCO Controlled"

7.5.18.2 Analog Output

The analog output (AO 42, parameters [6–50] and [19–65]) can be configured to output various controller parameters. This output is a current output (0–20mA or 4–20mA). Refer to the Common Terminal Wiring section in this manual for details on wiring. The list of analog output configuration options is shown below.

Table 63: Analog Output selection list

Selection	Current Range	Parameter [6–50] Terminal 42 Output	Parameter [19–65] Analog Output 42 Function
No operation		[0] No operation	
Output frequency	0–20mA	[100] Output frequency 0–100	
	4–20mA	[130] Out fr 0–100 4–20	
System frequency*	0–20mA	[52] MCO Controlled 0–20mA	[4] System frequency
	4–20mA	[53] MCO Controlled 4–20mA	[4] System frequency
Feedback	0–20mA	[52] MCO Controlled 0–20mA	[1] Control Feedback
	4–20mA	[53] MCO Controlled 4–20mA	[1] Control Feedback
Motor current	0–20mA	[103] Motor cur. 0–Imax	
	4–20mA	[133] Motor cur. 4–20mA	
System Power*	0–20mA	[52] MCO Controlled 0–20mA	[3] System power
	4–20mA	[53] MCO Controlled 4–20mA	[3] System power
Motor Power	0–20mA	[106] Power 0–Pnom	
	4–20mA	[136] Power 4–20mA	
System speed*	0–20mA	[52] MCO Controlled 0–20mA	[2] System speed
	4–20mA	[53] MCO Controlled 4–20mA	[2] System speed
Motor speed	0–20mA	[107] Speed 0–HighLim	
	4–20mA	[137] Speed 4–20mA	

NOTE: Selection list for Output Function is in column "Selection" in the above Analog Output Configuration table.

NOTE: The selections marked with asterisk should be only available if Multipump is set to "Yes". Columns 2 & 3 provide values for parameters [6-50] and [19-65]. Values in parameter [19-65] are ignored unless AO is set to "MCO Controlled".

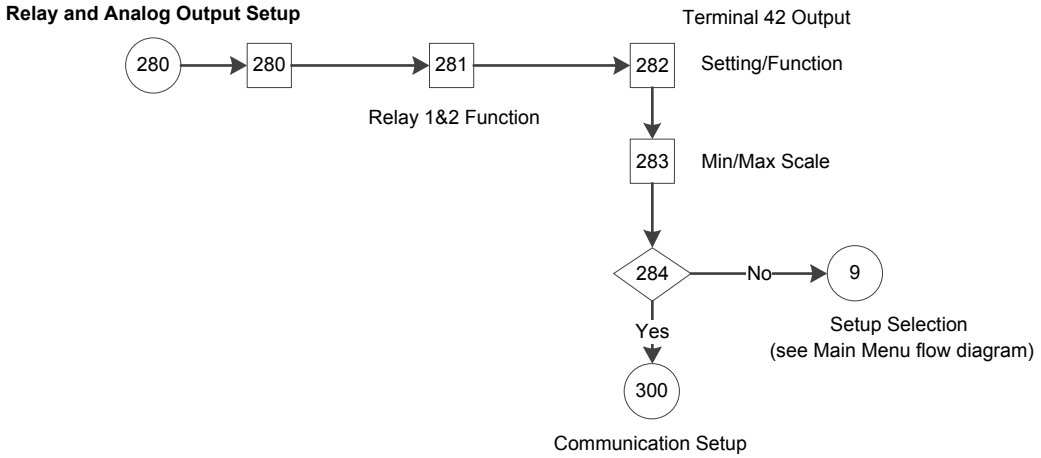

Figure 121: Relay & Analog Output Setup Flow Diagram

Table 64: Relay & Analog Output Setup Screens

280 Relay & Analog Output Setup				
Screen ID No.	Screens	Selections	Parameters Setup Information	Screen Information
280	Setup Selection Relay & Analog Output			Continue to screen ID #281.
281	Relay 1 Function Pump running Relay 2 Function Sleep Mode	[Selection List] [Selection List]	Note: see table in this section to set parameters.	Continue to screen ID #282.
282	Terminal 42 O/P Setting 4-20mA Terminal 42 Output Fun... No Operation	[List] [List]	Note: see table in this section to set parameters.	Continue to screen ID #283.

280 Relay & Analog Output Setup				
Screen ID No.	Screens	Selections	Parameters Setup Information	Screen Information
283	Terminal 42 Output Min... 0.00% Terminal 42 Output Ma... 100.00%	_____% _____%	• [6-51] = first entry. • [6-52] = second entry.	Continue to screen ID #284.
284	Continue to Communication Setup? Yes	[Yes] [No]		• Yes: continue to the Communication Setup Screens table. • No: return to the Setup Selection screen ID #6 in the Main-Menu Screens table.

7.5.19 Communication setup

The Start-Up Genie (Smart Setup) can be used to setup the on board fieldbus communications through the RS485 port. Select the desired protocol from the first menu. Supported protocols include Modbus RTU and BACnet MS/TP.

A slightly different set of parameters must be configured to setup each protocol. Use the Start-Up Genie (Smart Setup) to guide the setup of each protocol.

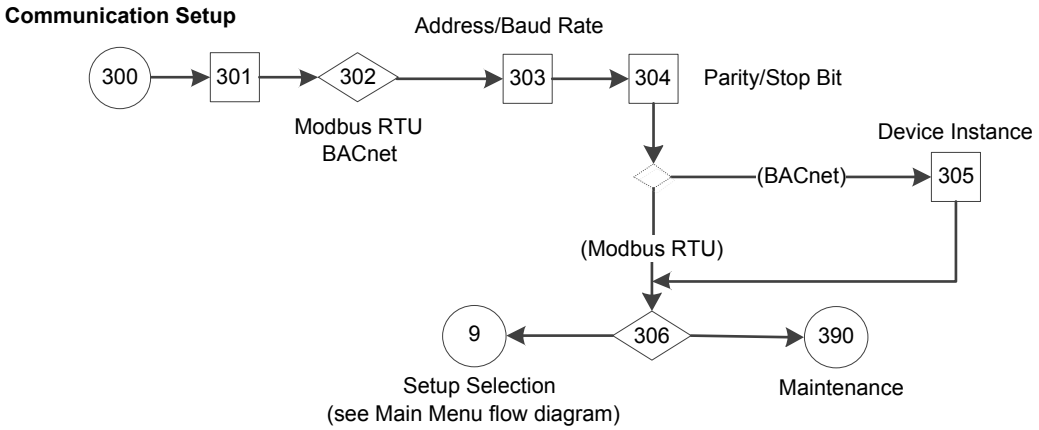

Figure 122: Communication Setup Flow Diagram

Table 65: Communication Setup Screens

300 Communication Setup				
Screen ID No.	Screens	Selections	Parameters Setup Information	Screen Information
301	Setup Selection Communication			
302	Protocol Modbus RTU	[Modbus RTU] [BACnet]	[8-30] = entry	Continue to screen ID #303.
303	Address 1 Baud Rate 9600 Baud	_____ _____ Baud	[8-31] = first entry [8-32] = second entry [8-32] = second entry (9600 is default for Modbus, 38400 is default for BACNet).	Continue to screen ID #304. Note: In Fixed Master configuration, baud rate of follower drive/pump should always be 115200 and protocol should be FC.
304	Parity / Stop Bits Even Parity,1 Stop Bit	_____ Parity, _____Bit	("Even Parity, 1 Stop Bit " is default for Modbus, "No Parity, 1 Stop Bit" is default for BACnet).	• (BACnet): continue to screen ID #305. • (Modbus RTU): continue to screen ID #306.
305	BACnet Device Instance 1	_____	[8-70] = entry	Return to the Setup Selection screen ID #6 in the Main-Menu Screens table.
306	Continue to Maintenance? Yes	[Yes] [No]		• Yes: continue to the Maintenance Setup Screens table. • No: return to the Setup Selection screen screen ID #6 the Main-Menu Screens table.

7.5.20 Maintenance

The Maintenance setup can reset the running hours. Select Do not Reset or Reset Counter for [15-07] **Reset Running Hours Counter** when the Reset Running Hours screen displays.

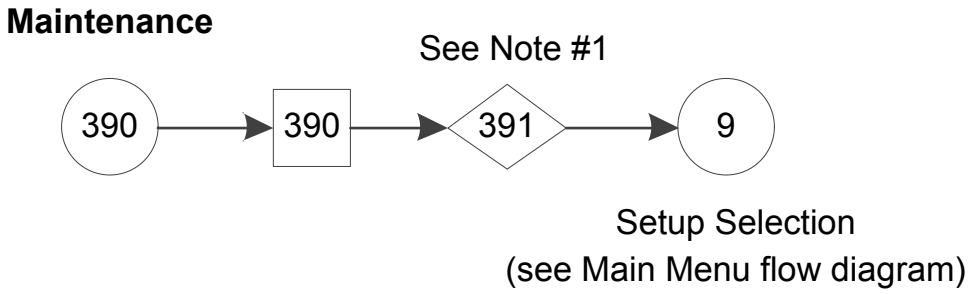

Figure 123: Maintenance Flow Diagram

Note #1: Reset Running Hours Counters

Table 66: Maintenance Setup Screens

390 Maintenance Setup				
Screen ID No.	Screens	Selections	Parameters Set Information	Screen Information
390	Setup Selection Maintenance			Continue to screen ID #391.
391	Reset Running Hours Counter Do Not Rest	[Do not reset] [Reset counter]		Continue to the Setup Selection screen ID #6 in the Main Menu Screens table.

7.5.21 System start-up

The procedure in this section requires user wiring and application programming to be completed. Application set-up examples are intended to help with this task. Other aids to application set-up are listed in 1.2 Additional Resources. The following procedure is recommended after application set-up by the user is completed.

NOTICE:

MOTOR START. Ensure that the motor, system and any attached equipment is ready for start.

1. Press [Auto On].
2. Ensure that external control function are properly wired to the frequency converter and all programming is completed.
3. Apply an external run command.
4. Adjust the speed reference throughout the speed range.

5. Remove the external run command.
6. Note any problems.

   If warning or alarms occur, see Warnings and Alarms section for details on troubleshooting.

8 Warnings and alarms

8.1 Warning and alarm types

Warnings

A warning is issued when an alarm condition is impending or when an abnormal operating condition is present and may result in the frequency converter issuing an alarm. A warning clears by itself when the abnormal condition is removed.

Alarms

An alarm is issued when the frequency converter is tripped, that is, the frequency converter suspends operation to prevent frequency converter or system damage. Depending on settings the motor will ramp or coast to stop. The frequency converter logic will continue to operate and monitor the frequency converter status. After the fault condition is remedied, the frequency converter can be reset. It will be ready to start operation again.

A trip can be reset in any of 4 ways:

- Press [Reset] on the LCP
- Digital reset input command
- Serial communication reset input command
- Auto reset

An alarm that causes the frequency converter to trip-lock requires that input power is cycled. Depending on settings the motor will ramp or coast to stop. The frequency converter logic will continue to operate and monitor the frequency converter status. Remove input power to the frequency converter and correct the cause of the fault, then restore power. This action puts the frequency converter into a trip condition as described above and may be reset in any of those 4 ways.

8.2 Warning and alarm displays

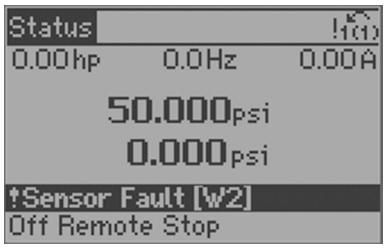

Figure 124: Warning display

An alarm or trip-lock alarm will flash along with the alarm number.

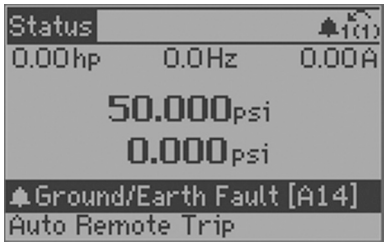

Figure 125: Alarm display

In addition to the text and alarm code on the frequency converter LCP, there are three status indicator lights.

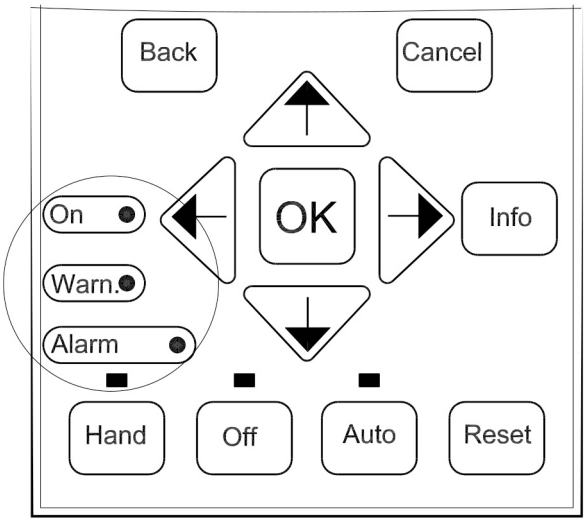

Figure 126: Status indicator lights

Table 67: Status indicator lights explanations

	Warning LED	Alarm LED
Warning	On	Off
Alarm	Off	On (Flashing)
Trip-Lock	On	On (Flashing)

Warnings/Alarm messages

A warning or an alarm is signaled by the relevant LED on the front of the frequency converter and indicated by a code on the display.

A warning remains active until its cause is no longer present. Under certain circumstances, operation of the motor may still be continued. Warning messages may be critical, but are not necessarily so.

In the event of an alarm, the frequency converter trips. Reset the alarm to resume operation once the cause has been rectified.

Three ways to reset:

- Press [Reset].
- Via a digital input with the “Reset” function.
- Via serial communication/optional fieldbus.

NOTE: After a manual reset pressing [Reset], press [Auto On] to restart the motor.

If an alarm can't be reset, the reason may be that its cause has not been rectified, or the alarm is trip-locked.

Alarms that are trip-locked offer additional protection, meaning that the mains supply must be switched off before the alarm can be reset. After being switched back on, the frequency converter is no longer blocked and can be reset as described above once the cause has been rectified.

Alarms that are not trip-locked can also be reset using the automatic reset function in [14–20] **Reset Mode** (Warning: Automatic wake-up is possible).

In some cases a warning will occur before an alarm is issued. This is possible, for instance, in [1–90] **Motor Thermal Protection**. After an alarm or trip, the motor continues to ramp down or coast, and the alarm and warning flash. Once the problem has been rectified, only the alarm continues flashing until the frequency converter is reset.

NOTE: No missing motor phase detection (numbers 30–32) and no stall detection is active when [1–10] **Motor Construction** is set to [1] PM non salient SPM.

The following table defines whether a warning is issued before an alarm, and whether the alarm trips the unit or trip locks the unit.

Table 68: Alarm/Warning code list

Number	Description	Warning	Alarm/Trip	Alarm/Trip Lock	Parameter Reference
1	10 volts low	X			
2	Sensor Fault	(X)	(X)		[6–01] **Sensor Fault Timeout Function**
3	No motor	(X)			[1–80] **Function at Stop**
4	Input Phase Loss	(X)	(X)	(X)	[14–12] **Function at Mains Imbalance**Function at Sensor Fault
5	DC link voltage high	X			
6	DC link voltage low	X			
7	DC overvoltage	X	X		
8	DC undervoltage	X	X		
9	Inverter overloaded	X	X		
10	Motor ETR over-temperature	(X)	(X)		[1–90] **Motor Temperature**
11	Motor thermistor over temperature	(X)	(X)		[1–90] **Motor Temperature**
12	Torque limit	X	X		
13	Over current	X	X	X	
14	Ground/earth fault	X	X		
15	Hardware mismatch		X	X	
16	Short circuit		X	X	
17	Control word timeout	(X)	(X)		[8–04] **Control Timeout Function**
18	Start Failed		X		[1–77] **Compressor Start Max Speed [RPM]**, [1–79] **Compressor Start Max Time to Trip**, [1–03] **Torque Characteristics**
20	Temp. Input Error				
21	Param error				
22	Hoist Mech. Brake	(X)	(X)		Parameter group 2–2*
23	Internal fans	X			
24	External fans	X			
25	Brake resistor short-circuited	X			
26	Brake resistor power limit	(X)	(X)		[2–13] **Brake Power Monitoring**
27	Brake chopper short-circuited	X	X		
28	Brake check	(X)	(X)		[2–15] **Brake Check**
29	Heatsink temp	X	X	X	

Number	Description	Warning	Alarm/Trip	Alarm/Trip Lock	Parameter Reference
30	Motor phase U missing	(X)	(X)	(X)	[4–58] **Missing Motor Phase Function**
31	Motor phase V missing	(X)	(X)	(X)	[4–58] **Missing Motor Phase Function**
32	Motor phase W missing	(X)	(X)	(X)	[4–58] **Missing Motor Phase Function**
33	Inrush fault		X	X	
34	Fieldbus communication fault	X	X		
35	Option fault				
36	Mains failure	X	X		
37	Phase imbalance (Not applicable for single phase drives).		X		
38	Internal fault		X	X	
39	Heatsink sensor		X	X	
40	Overload of Digital Output Terminal 27	(X)			[5–00] **Digital I/O mode**, [5–01] **Terminal 27 Mode**
41	Overload of Digital Output Terminal 29	(X)			[5–00] **Digital I/O mode**, [5–02] **Terminal 29 Mode**
42	Ovrld X30/6–7	(X)			
43	Ext. Supply (option)				
45	Earth Fault 2	X	X		
46	Pwr. card supply		X	X	
47	24 V supply low	X	X	X	
48	1.8 V supply low		X	X	
49	Speed limit		X		[1–86] **Trip Speed Low [RPM]**
50	AMA calibration failed		X		
51	AMA check U_{nom} and I_{nom}		X		
52	AMA low I_{nom}		X		
53	AMA motor too big		X		
54	AMA motor too small		X		
55	AMA parameter out of range		X		
56	AMA interrupted by user		X		
57	AMA time-out		X		
58	AMA internal fault	X	X		
59	Current limit	X			
60	Pump Protect (North America)/External Interlock (International)	X	X		

Number	Description	Warning	Alarm/Trip	Alarm/Trip Lock	Parameter Reference
61	Feedback Error	(X)	(X)		[4–30] Motor Feedback Loss Function
62	Output Frequency at Maximum Limit	X			
63	Mechanical Brake Low		(X)		[2–20] Release Brake Current
64	Voltage Limit	X			
65	Control Board Over-temperature	X	X	X	
66	Heat sink Temperature Low	X			
67	Option Configuration has changed		X		
68	Safe Stop	(X)	(X)[1)]		[5–19] **Terminal 37 Safe Stop**
69	pwr. Card Temp		X	X	
70	Illegal FC configuration			X	
71	PTC 1 Safe Stop				
72	Dangerous failure				
73	Safe Stop Auto Restart	(X)	(X)		[5–19] **Terminal 37 Safe Stop**
74	PTC Thermistor			X	
75	Illegal Profile Sel.		X		
76	Power Unit Setup	X			
77	Reduced power mode	X			[14–59] **Actual Number of Inverter Units**
78	Tracking Error	(X)	(X)		[4–34] Tracking Error Function
79	Illegal PS config		X	X	
80	Drive initialized to Default value		X		
81	CSIV corrupt		X		
82	CSIV parameter error		X		
83	Illegal Option Combination			X	
84	No Safety Option		X		
85	Dang fail PB				
86	Dang fail DI				
88	Option Detection			X	
89	Mechanical Brake Sliding	Z			
90	Feedback Monitor	(X)	(X)		[17–61] Feedback Signal Monitoring
91	Analog input 54 wrong settings			X	5202

Number	Description	Warning	Alarm/Trip	Alarm/Trip Lock	Parameter Reference
92	No Flow	X	X		[22–2]* **No-Flow Detection**
93	No Water/Loss of Prime (North America) Dry Pump (International)	X	X		[22–2]* **No-Flow Detection**
94	Under pressure	X	X		[22–5]*
95	Broken Belt	X	X		[22–6]*
96	Start Delayed	X			[22–7]*
97	Stop Delayed	X			[22–7]*
98	Clock Fault	X			[0–7]* **Clock Settings**
102	Too many CAN objects				
103	Illegal axis num.				
104	Mixing fans				
105	Error not reset				
106	HOME not done				
107	Home vel zero				
108	Position error				
109	Index not found				
110	Unknown cmd.				
111	SW end limit				
112	Unknown param				
113	FC not enabled				
114	Too many loops				
115	Par. save failed				
116	Param. memory				
117	Progr. memory				
118	Reset by CPU				
119	User abort.				
121	No more SDO channels				
125	HW end limit				
149	Too many inter.				
150	No ext. 24 V				
151	GOSUB > limit				
152	Return @ limit				
154	D.out overload				
155	LINK failed				
156	Illegal double arg.				
160	Internal Intr. error				
162	Memory error				
163	ATEX ETR cur.lim.warning	X			
164	ATEX ETR cur.lim.alarm		X		

Number	Description	Warning	Alarm/Trip	Alarm/Trip Lock	Parameter Reference
165	ATEX ETR freq.lim.warning	X			
166	ATEX ETR freq.lim.alarm		X		
201	Fire M was Active				
202	Fire M Limits Exceeded				
203	Missing Motor				
204	Locked Rotor				
243	Brake IGBT	X	X		
244	Heatsink temp	X	X	X	
245	Heatsink sensor		X	X	
246	Pwr. card supply				
247	Pwr. card temp		X	X	
248	Illegal PS config		X	X	
250	New spare parts			X	
251	New Type Code		X	X	
(X) Dependent on parameter 1) Cannot be Auto reset via 14–20 Reset Mode					

A trip is the action following an alarm. The trip coasts the motor and is reset by pressing [Reset] or by a digital input (parameter group *5–1* Digital Inputs* [1]). The origin event that caused the alarm cannot damage the frequency converter or cause dangerous conditions. A trip lock is an action when an alarm occurs, which could damage the frequency converter or connected parts. A trip lock situation can only be reset by a power cycling.

Table 69: LED indication

Warning	Yellow
Alarm	Flashing red
Trip locked	Yellow and red

The following table defines the alarm words, warning words and extended status words that can be read out via serial bus or optional fieldbus for diagnostics, or through 16–94 Ext. Status Word.

Table 70: Description of Alarm word, Warning word and Extended Status word

Bit	Hex	Dec	Alarm word	Alarm word 2	Warning word	Warning word 2	Extended Status word	Extended Status word 2
Alarm Word Extended Status Word								
0	00000001	1	Brake Check (A28)	ServiceTrip, read/write	Brake Check (W28)	Start Delayed	Ramping	Off
1	00000002	2	Pwr.card temp (A69)	ServiceTrip, (reserved)	Pwr.card temp (A69)	Stop Delayed	AMA Running	Hand/Auto

Bit	Hex	Dec	Alarm word	Alarm word 2	Warning word	Warning word 2	Extended Status word	Extended Status word 2
Alarm Word Extended Status Word								
2	00000004	4	Ground/Earth Fault (A14)	ServiceTrip, Typecade/ sparepart	Ground/Earth Fault (W14)	reserved	Start CW/CCW start_possible is active, when the DI selections [12] OR [13] are active and the requested direction matches the reference sign	Profibus OFF1 active
3	00000008	8	Ctrl.Card Temp (A65)	ServiceTrip, (reserved)	Ctrl.Card Temp (W65)	reserved	Slow Down slow down command active, e.g. via CTW bit 11 oe DI	Profibus OFF2 active
4	00000010	16	Ctrl. Word TO (A17)	ServiceTrip, (reserved)	Ctrl. Word TO (W17)		Catch Up catch up comand active, e.g. via CTW bit 12 or DI	Profibus OFF3 active
5	00000020	32	Over Current (A13)	reserved	Over Current (W13)	reserved	Feedback High feedback > 4–57	Relay 123 active
6	00000040	64	Torque Limit (12)	reserved	Torque Limit (W12)	reserved	Feedback Low feedback < 4–56	Start Prevented
7	00000080	128	Motor Th Over (A11)	reserved	Motor Th Over (W11)	reserved	Output Current High current > 4–51	Control Ready
8	00000100	256	Motor ETR Over (A10)	reserved	Motor ETR Over (W10)	reserved	Output Current Low current < 4–50	Drive Ready
9	00000200	512	Inverter Overld. (A9)	Discharge High	Onverter Overld (W9)	Discharge High	Output Freq High speed > 4–53	Quick Stop
10	000000400	1024	DC under Volt (A8)	Start Failed	SC under Volt (W8)	Multi-motor underload	Output Freq Low speed < 4–52	DC Brake
11	00000080	2048	DC over Volt (A7)	Speed Limit	SC over Volt (W7)	Multi-motor Overload	Brake Check OK brake test NOT ok	Stop

Bit	Hex	Dec	Alarm word	Alarm word 2	Warning word	Warning word 2	Extended Status word	Extended Status word 2
Alarm Word Extended Status Word								
12	00001000	4096	Short Circuit (A16)	Pump Protect (North America)/ External Interlock (International)	DC Voltage Low (W6)	Compress or Interlock	Braking Max BrakePower > BrakePowerLimit (2–12)	Stand by
13	00002000	8192	Inrush Fault (A33)	Illegal Option Combi.	DC Voltage High (W5)	Mechanical Brake Sliding	Braking	Freeze Output Request
14	00004000	16384	Input Phase Loss (A4)	No Safety Option	Mains ph. Loss (W4)	Safe Option Warning	Out of Speed Range	Freeze Output
15	00008000	32768	AMA not OK	reserved	No Motor (W3)	Auto DC Braking	OVC Active	Jog Request
16	00010000	65536	Sensor Fault (A2)	reserved	Sensor Fault (W2)		AC Brake	Jog
17	00020000	131072	Internal Fault (A38)	KTY error	10V Low (W1)	KTY Warn	Password Timelock number of allowed password trials exceeded - timelock active	Start Request
18	00040000	262144	Brake Overload (A26)	Fans error	Brake Overload (W26)	Fans Warn	Password Protection 0–61 = ALL_NO_ACCESS OR BUS_NO_ACCESS OR BUS_READONLY	Start
19	00080000	524288	U phase Loss (A30)	ECB error	Brake Resistor (W25)	ECB Warn	Reference High reference > 4–55	Start Applied
20	00100000	1048576	V phase Loss (AA31)	reserved	Brake IGBT (W27)	reserved	Reference Low reference < 4–54	Start delay
21	00200000	2097152	W phase Loss (A32)	reserved	Speed Limit (W49)	RESERVED	Local Reference reference site = REMOTE > auto on pressed & active	Sleep
22	00400000	4194304	Fieldbus Fault (A34)	reserved	Fieldbus Fault (W34)	reserved	Protection mode notification	Sleep Boost
23	00800000	8388608	24 V Supply Low (A47)	reserved	24V Supply Low (W47)	reserved	Unused	Running
24	01000000	16777216	Mains Failure (A36)	reserved	Mains Failure (W36)	reserved	Unused	Drive Bypass

Bit	Hex	Dec	Alarm word	Alarm word 2	Warning word	Warning word 2	Extended Status word	Extended Status word 2
Alarm Word Extended Status Word								
25	02000000	33554432	1.8V Supply Low (A48)	Current Limit (W59)	Current Limit (A59)	reserved	Unused	Fire Mode
26	04000000	67108864	Brake Resistor (A25)	reserved	Low Temp (W66)	reserved	Unused	Pump Protect (North America)/ External Interlock (International)
27	08000000	134217728	Brake IGBT (A27)	reserved	Voltage Limit (W64)	reserved	Unused	Firemode Limit Exceed
28	10000000	268435456	Option Change (A67)	reserved	Encoder loss (W90)	reserved	Unused	FlyStart active
29	20000000	536870912	Drive Initialized (A80)	Encoder loss (A90)	Output freq. lim. (W62)	BackEMF too High	Unused	
30	40000000	1073741824	Safe Stop (A68)	PTC Thermistor (A74)	Safe Stop (W68)	PTC Thermist or (W74)	Unused	
31	80000000	2147483648	Mech. brake low (A63)	Dangerous failure (A72)	Extended Status Word		Protection Mode	

The following table defines the application alarm word, application warning word and application status word that can be read out via serial bus or optional fieldbus for diagnostics, or respectively through [19-02] Appl Alarm Word, [19-03] Appl Warning Word and [19-04] Appl Status Word.

Table 71: Description of Application Alarm word, Application Warning word and Application Status word

Bit	Hex	Dec	Application Alarm word (Parameter 19-02)	Application Warning word (Parameter 19-03)	Application Status word (Parameter 19-04)
0	00000001	1	Reserved	No Power Calibration	Initializing
1	00000002	2	Underpressure	Underpressure	Not Defined
2	00000004	4	High System Cut-off	High System Cut-off	System can run
3	00000008	8	Low Suction Cut-off	Low Suction Cut-off	Priming
4	00000010	16	High Suction Cut-off	High Suction Cut-off	Running
5	00000020	32	All Zone Failure	All Zone Failure	Not Defined
6	00000040	64	Not Defined	Not Defined	Suction Alarm
7	00000080	128	Low System Cut-off	Low System Cut-off	Discharge Alarm
8	00000100	256	Reserved	Sensor Fault	Drive Alarm
9	00000200	512	Reserved	Reserved	Pump Alarm
10	000000400	1024	Not Defined	Feedback 1 Fail	Alarm
11	00000080	2048	Not Defined	Feedback 2 Fail	Warning
12	00001000	4096	Not Defined	Feedback 3 Fail	Reset Required
13	00002000	8192	Not Defined	Feedback 4 Fail	Not Defined
14	00004000	16384	Not Defined	Reserved	Not Defined
15	00008000	32768	Not Defined	Reserved	Not Defined
16	00010000	65536	Not Defined	Reserved	Suction Alarm
17	00020000	131072	Not Defined	Reserved	Reserved

Bit	Hex	Dec	Application Alarm word (Parameter 19-02)	Application Warning word (Parameter 19-03)	Application Status word (Parameter 19-04)
18	00040000	262144	Not Defined	Reserved	Reserved
19	00080000	524288	Not Defined	Reserved	Reserved
20	00100000	1048576	Not Defined	Suction Feedback Fail	Reserved
21	00200000	2097152	Not Defined	Reserved	Reserved
22	00400000	4194304	Not Defined	Reserved	Reserved
23	00800000	8388608	Not Defined	Reserved	Reserved
24	01000000	16777216	Not Defined	Reserved	Operating Mode:0
25	02000000	33554432	Not Defined	Reserved	Operating Mode:1
26	04000000	67108864	Not Defined	Reserved	Operating Mode:2
27	08000000	134217728	Not Defined	Reserved	Operating Mode:3
28	10000000	268435456	Not Defined	Flow Feedback Fail	System Status:0
29	20000000	536870912	Not Defined	Reserved	System Status:1
30	40000000	1073741824	Not Defined	Not Defined	System Status:2
31	80000000	2147483648	Not Defined	Not Defined	System Status:3

8.3 Warnings and alarms

Table 72: Warnings and alarms

Warning/Alarm	Description	Cause	Remedy
1 – 10 V low	The control card voltage is below 10 V from terminal 50.	A short in a connected potentiometer or improper wiring of the potentiometer.	Remove the wiring from terminal 50. If the warning clears, the problem is with the customer wiring.
2 – Sensor Fault Note: this warning/alarm is not available when the MCO301 Programmable API option card is installed and functioning.	This warning or alarm will only appear if programmed by the user in [6–01] **Sensor Fault Timeout Function**. The signal on one of the analog inputs is less than 50% of the minimum value that is programmed for that input.	Broken wiring or faulty device sending the signal.	Check the connections on all the analog input terminals. Control card terminals 53 and 54 for signals, terminal 55 common. General Purpose I/O Option Card terminals 11 and 12 for signals, terminal 10 common. Analog I/O Option Card terminals 1, 3, 5 for signals, terminals 2, 4, 6 common. Check that the frequency converter programming and switch settings match the analog signal type. Perform Input Terminal Signal Test
4 – Input phase loss	A phase is missing on the supply side, or the mains voltage imbalance is too high. This message also appears for a fault in the input rectifier on the frequency converter. Options are programmed at [14–12] **Function at Mains Imbalance** (not applicable for single-phase drives).		Check the supply voltage and supply currents to the frequency converter.
5 – DC link voltage high	The intermediate circuit voltage (DC) is higher than the high voltage warning limit.	The limit is dependent on the frequency converter voltage rating. The frequency converter is still active.	

Warning/Alarm	Description	Cause	Remedy
6 – DC link voltage low	The intermediate circuit voltage (DC) is lower than the low voltage warning limit.	The limit is dependent on the frequency converter voltage rating. The frequency converter is still active.	
7 – DC overvoltage	If the intermediate circuit voltage exceeds the limit, the frequency converter trips after a time.		Connect a brake resistor Extend a ramp time Change the ramp type Activate functions in [2–10] **Brake Function** Increase [14–26] **Trip Delay at Inverter Fault**
8 – DC under voltage	If the intermediate circuit voltage (DC) drops below the under voltage limit, the frequency converter checks if a 24 VDC backup supply is connected.	If no 24 VDC backup supply is connected, the frequency converter trips after a fixed time delay. The time delay varies with unit size.	Check that the supply voltage matches the frequency converter voltage. Perform input voltage test Perform soft charge and rectifier circuit test.
9 – Inverter overloaded	The frequency converter is about to cut-out because of an overload (too high current for too long). The counter for electronic, thermal inverter protection gives a warning at 98% and trips at 100% while giving an alarm. The frequency converter cannot be reset until the counter is below 90%.	The fault is that the frequency converter is overloaded by more than 100% for too long.	Compare the output current shown on the LCP with the frequency converter rated current. Compare the output current shown on the LCP with the measured motor current. Display the Thermal Drive Load on the LCP and
10 – Motor overload temperature	According to the electronic thermal protection (ETR), the motor is too hot. Select whether the frequency converter gives a warning or an alarm when the counter reaches 100% in [1–90] **Motor Thermal Protection**.	The fault occurs when the motor is overloaded by more than 100% for too long.	Check for motor overheating. Check if the motor is mechanically overloaded. Check that the motor current set in [1–24] **Motor Current** is correct.
11 – Motor thermistor over temp	The thermistor might be disconnected. Select whether the frequency converter gives a warning or an alarm in [1–90] **Motor Thermal Protection**.		Check for motor overheating. Check if the motor is mechanically overloaded. When using terminal 54, check that the thermistor is connected correctly between terminal 54 (analog voltage input) and terminal 50 (+10 V supply) and that the terminal switch for 54 is set for voltage. Check [1–93] **Thermistor Source** selects terminal 54. When using digital inputs 18 or 19, check that the thermistor is connected correctly between either terminal 18 or 19 (digital input PNP only) and terminal 50. Check [1–93] **Thermistor Source** selects terminal 18 or 19.

Warning/Alarm	Description	Cause	Remedy
12 – Torque limit	The torque has exceeded the value in [4–16] **Torque Limit Motor Mode** or the value in [4–17] **Torque Limit Generator Mode**. [14–25] **Trip Delay at Torque Limit** can change this from a warning only condition to a warning followed by an alarm.		If the motor torque limit is exceeded during ramp up, extend the ramp up time. If the generator torque limit is exceeded during ramp down, extend the ramp down time. If torque limit occurs while running, possibly increase the torque limit. Be sure the system can operate safely at a higher torque. Check the application for excessive current draw on the motor.
13 – Over current	The inverter peak current limit (approximately 200% of the rated current) is exceeded. The warning lasts about 1.5 seconds, then the frequency converter trips and issues an alarm. This fault may be caused by shock loading or fast acceleration with high inertia loads. If extended mechanical brake control is selected, trip can be reset externally.		Remove power and check if the motor can be turned. Check that the motor size matches the frequency converter. Check parameters [1–20] through [1–25] for correct motor data.
14 – Ground/Earth fault	There is current from the output phases to ground, either in the cable between the frequency converter and the motor or in the motor itself.		Remove power to the frequency converter and repair the earth fault. Check for ground faults in the motor by measuring the resistance to ground of the motor leads and the motor megohmmeter.
15 – Hardware mismatch	A fitted option is not operational with the present control board hardware or software.		Record the value of the following parameters and contact your Xylem supplier: • [15–40] **FC Type** • [15–41] **Power Section** • [15–42] **Voltage** • [15–43] **Software Version** • [15–45] **Actual Typecode String** • [15–49] **SW ID Control Card** • [15–50] **SW ID Power Card** • [15–60] **Option Mounted** • [15–61] **Option SW Version**
16 – Short circuit	There is a short circuit in the motor or motor wiring.		Remove power to the frequency converter and repair the short circuit.
17 – Control word timeout	There is no communication to the frequency converter. The warning will only be active when [8–04] **Control Timeout Function** is NOT set to [0] OFF.	If [8–04] **Control Timeout Function** is set to Stop and Trip, a warning appears and the frequency converter ramps down until it stops then displays an alarm.	Check connections on the series communication cable. Increase [8–03] **Control Timeout Time** Check operation of the communication equipment Verify proper installation based on EMC requirements.

Warning/Alarm	Description	Cause	Remedy
18 – Start failed	The speed has not been able to exceed [1–77] **Compressor Start Max Speed [RPM]** during start within the allowed time. (set in [1–79] **Compressor Start Max Time to Trip**.	This may be caused by a blocked motor.	
23 – Internal fan fault	The fan warning function checks if the fan is running. The fan warning can be disabled on [14–53] **Fan Monitor**.		Check for proper fan operation. Cycle power to the frequency converter and check that the fan operates briefly at startup. Check the sensors on the heatsink and control card.
24 – External fan fault	The fan warning function checks if the fan is running. The fan warning can be disabled on [14–53] **Fan Monitor**.		Check for proper fan operation. Cycle power to the frequency converter and check that the fan operates briefly at startup. Check the sensors on the heatsink and control card.
25 – Brake resistor short circuit	The brake resistor is monitored during operation. If a short circuit occurs, the brake function is disabled and the warning appears. The frequency converter is still operational but without the brake function.		Remove power to the frequency converter and replace the brake resistor (see [2–15] **Brake Check**).
26 – Brake resistor power limit	The power transmitted to the brake resistor is calculated as a mean value over the last 120 seconds of run time. The calculation is based on the intermediate circuit voltage and the brake resistance value set in [2–16] **AC brake Max.Current**.	The warning is active when the dissipated braking is higher than 90% of the brake resistance power. If Trip [2] is selected in [2–13] **Brake Power Monitoring**, the frequency converter will trip when the dissipated braking power reaches 100%.	
27 – Brake chopper fault	The brake transistor is monitored during operation and if a short circuit occurs, the brake function is disabled and a warning is issued.	The frequency converter is still operational but, since the brake transistor has short-circuited, substantial power is transmitted to the brake resistor, even if it is inactive.	Remove power to the frequency converter and remove the brake resistor.
28 – Brake check failed	The brake resistor is not connected or not working.		Check [2–15] **Brake Check**.
29 – Heatsink temp	The maximum temperature of the heatsink has been exceeded. The temperature fault will not reset until the temperature falls below the reset heatsink temperature. The trip and reset points are based on the frequency converter power size.		Check for the following conditions: • Ambient temperature too high. • Motor cable too long. • Incorrect airflow clearance above and below the frequency converter. • Blocked airflow around the frequency converter. • Damaged heatsink fan. • Dirty heatsink.
30 – Motor phase U missing	Motor phase U between the frequency converter and the motor is missing.		Remove power from the frequency converter and check motor phase U.

Warning/Alarm	Description	Cause	Remedy
31 – Motor phase V missing	Motor phase V between the frequency converter and the motor is missing.		Remove power from the frequency converter and check motor phase V.
32 – Motor phase W missing	Motor phase W between the frequency converter and the motor is missing.		Remove power from the frequency converter and check motor phase W.
33 – Inrush fault	Too many power-ups have occurred within a short time period.		Let the unit cool to operating temperature.
34 – Fieldbus communication fault	Communication between the fieldbus and the communication option card is not operating.		
36 – Mains failure	This warning/alarm is only active if the supply voltage to the frequency converter is lost and [14–10] **Mains Failure** is NOT set to [0] No Function.		Check the fuses to the frequency converter and mains power supply to the unit.
38 – Internal fault	When an internal fault occurs, a code number defined in the table below is displayed.		Cycle power to the frequency converter. Check that the option is properly installed. Check for loose or missing wiring. It may be necessary to contact your Xylem supplier or service department. Note the code number for further troubleshooting directions.
39 – Heatsink sensor	No feedback from the heatsink temperature sensor.	The signal from the IGBT Thermal sensor is not available on the power card. The problem could be on the power card, on the gate drive card, or the ribbon cable between the power card and gate drive card.	
40 – Overload of digital output terminal 27			Check the load connected to terminal 27 or remove short-circuit connection. Check [5–00] **Digital I/O mode** and [5–01] **Terminal 27 Mode**.
41 – Overload of digital output terminal 29			Check the load connected to terminal 29 or remove short-circuit connection. Check [5–00] **Digital I/O mode** and [5–02] **Terminal 29 Mode**.
42 – Overload of digital output on X30/6 or overload of digital output on X30/7			For X30/6, check the load connected to X30/6 or remove short-circuit connection. Check [5–32] **Term X30/6 Digi Out (MCB 101)**. For X30/7, check the load connected to X30/77 or remove short-circuit connection. Check [5–33] **Term X30/7 Digi Out (MCB 101)**.

Warning/Alarm	Description	Cause	Remedy
45 – Ground fault 2	Ground (earth) fault on startup.		Check for proper grounding (earthing) and loose connections. Check for proper wire size. Check motor cables for short-circuits or leakage currents.
46 – Power card supply	The supply on the power card is out of range.	There are three power supplies generated by the switch mode power supply (SMPS) on the power card: 24 V, 5 V, +/- 18 V. When powered with 24 VDC with the 24VDC Backup Option Card option, only the 24 V and 5 V supplies are monitored. When powered with three-phase mains voltage, all three supplied are monitored.	Check for a defective power cord. Check for a defective control card. Check for a defective option card. If a 24 VDC power supply is used, verify proper supply power.
47 – 24 V supply low	The 24 V DC is measured on the control card.	The external 24 V DC backup power supply may be overloaded.	Contact your Xylem supplier.
48 – 1.8 V supply low	The power supply is measured on the control card.	The 1.8 V DC supply used on the control card is outside of allowable limits.	Check for a defective control card. If an option card is present, check for an overvoltage condition.
49 – Speed limit	When the speed is not within the specified range in [4–11] **Motor Speed Low Limit [RPM]** and [4–13] **Motor Speed High Limit [RPM]**, the frequency converter will show a warning.	When the speed is below the specified limit in [1–86] **Trip Speed Low [RPM]** (except when starting or stopping) the frequency converter will trip.	
50 – AMA calibration failed			Contact your Xylem supplier or Xylem Service Department.
51 – AMA check Unom and Inom	The settings for motor voltage, motor current, and motor power are wrong.		Check the settings in [1–20] to [1–25].
52 – AMA low Inom	The motor current is too low.		Check the setting in [4–18] **Current Limit**.
53 – AMA motor too big	The motor is too big for the AMA to operate.		
54 – AMA motor too small	The motor is too small for the AMA to operate.		
55 – AMA Parameter out of range	The parameter values of the motor are outside of the acceptable range. AMA will not run.		
56 – AMA interrupted by the user	The AMA has been interrupted by the user.		
57 – AMA timeout			Try to restart AMA again. Repeated restarts may overheat the motor.
58 – AMA internal fault			Contact your Xylem supplier.
59 – Current limit	The current is higher than the value in [4–18] **Current Limit**.		Ensure that motor data in [1–20] through [1–25] are set correctly. Possibly increase the current limit. Be sure that the system can operate safely at a higher limit.
60 – Pump Protect (North America)/External Interlock (International)	A digital input signal is indicating a pump protection external to the controller is active.		

Warning/Alarm	Description	Cause	Remedy
62 – Output frequency at maximum limit	The output frequency has reached the value set in [4–19] **Max Output Frequency**.		Check the application to determine the cause. Possibly increase the output frequency. Be sure the system can operate safely at a higher output frequency. The warning will clear when the output drops below the maximum limit.
65 – Control card over temperature	The cut-out temperature of the control card is 80°C.		Check that the ambient operating temperature is within limits. Check for clogged filters. Check fan operation. Check the control card.
66 – Heatsink temperature low	The frequency converter is too cold to operate. This warning is based on the temperature sensor in the IGBT module.		Increase the ambient temperature of the unit. A trickle amount of current can be supplied to the frequency controller whenever the motor is stopped by setting [2–00] **DC Hold/Preheat Current** at 5% and [1–80] **Function at Stop**.
67 – Option module configuration has changed	One or more options have either been added or removed since the last power down.		Check that the configuration change is intentional and reset the frequency controller.
68 – Safe stop activated	Loss of the 24 VDC signal on terminal 37 has caused the frequency controller to trip.		To resume normal operation, apply 24 VDC to terminal 37 and reset the frequency controller.
69 – Power card temperature	The temperature sensor on the power card is either too hot or too cold.		Check that the ambient operating temperature is within limits. Check for clogged filters. Check fan operation. Check the power card.
70 – Illegal FC configuration	The control card and power card are incompatible.		Contact your supplier with the typecode of the unit from the
80 – Drive initialized to default value	Parameter settings are initialized to default settings after a manual reset.		Reset the unit to clear the alarm.
92 – No flow	A no-flow condition has been detected in the system.	[22–23] **No-Flow Function** is set for alarm.	Troubleshoot the system and reset the frequency converter after the fault has been cleared.
93 – No Water/Loss of Prime (North America) Dry Pump (International)	A low power condition in the system with the frequency converter operating at high speed may indicate a the pump is out of water or has lost prime.	[22–26] **No Water/Loss of Prime Function** (North America) / **Dry Pump Function** (International) is set for alarm. The [22–39] **No Water/Loss of Prime Limit [HP]** is set too high.	Troubleshoot the system and reset the frequency converter after the fault has been cleared.
94 – Under Pressure Note: this warning/alarm is not available when the MCO301 Programmable API option card is installed and functioning.	The system pressure is below the Under Pressure limit (Under Pressure Limit = Setpoint [22–25] Under Pressure Difference).	This may indicate leakage in the system. [22–50] **Under Pressure Function** (North America) / **End of Curve Function** (International) is set for alarm.	Troubleshoot the system, and reset the frequency converter after the fault has been cleared.
95 – Broken belt	Torque is below the torque level set for no load, indicating a broken belt.	[22–60] **Broken Belt Function** is set for alarm.	Troubleshoot the system and reset the frequency converter after the fault has been cleared.

Warning/Alarm	Description	Cause	Remedy
96 – Start delayed	Motor start has been delayed due to short-cycle protection.	[22–76] **Interval Between Starts** is enabled.	Troubleshoot the system and reset the frequency converter after the fault has been cleared.
97 – Stop delayed	Stopping the motor has been delayed due to short cycle protection.	[22–76] **Interval Between Starts** is enabled.	Troubleshoot the system and reset the frequency converter after the fault has been cleared.
98 – Clock fault	Time is not set or the RTC clock has failed.		Reset the clock in [0–70] **Date and Time**.
200 – Fire mode		This indicates the frequency controller is operating in fire mode.	Cycle power to the unit to remove the warning. See the fire mode data in the alarm log on the controller.
201 – Fire mode was active	This indicates the frequency controller had entered fire mode.		Cycle power to the unit to remove the warning. See the fire mode data in the alarm log on the controller.
202 – Fire mode limits exceeded	While operating in fire mode one or more alarm conditions has been ignored which would normally trip the unit.	Operating in this condition voids unit warranty.	Cycle power to the unit to remove the warning. See the fire mode data in the alarm log on the controller.
203 – Missing motor	With a frequency converter operating multi-motors, an under-load condition was detected.	This could indicate a missing motor.	Inspect the system for proper operation.
204 – Locked rotor	With a frequency converter operating multi-motors, an overload condition was detected.	This could indicate a locked rotor.	Inspect the motor for proper operation.
250 – New spare part	A component in the frequency converter has been replaced.		Reset the frequency converter for normal operation.
251 – New typecode	A component in the frequency converter has been replaced and the typecode changed.		Reset the frequency converter for normal operation.

Table 73: Application warnings and alarms

Warning/Alarm	Description	Cause	Remedy
A500_NO_CALIBRATION	No Calibration warning occurs when there is No Power Calibration has been done for variable frequency drive.		Power calibrate the system by doing Auto power calibration using [22-20] **No Flow Power Calibration** (North America)/**Low Power Auto Set-up** (International).
A501_UNDERPRESSURE	Feedback is lower than the set point.	This may indicate leakage in the System. Parameter [22–50] **Under Pressure Function** (North America) /**End of Curve Delay** (International) is set for alarm.	Troubleshoot the system, and reset the frequency converter after the fault has been cleared.
A502_HIGH_SYSTEM	The system pressure is above the [19-27] **High System Limit**.	High System Alarm may damage the system if it is not meant to sustain such high pressure	Troubleshoot the system, and reset the frequency converter after the fault has been cleared.
A503_LOW_SUCTION	The Suction pressure is below the [19-33] **Low Suction Cut-out**.	Low Suction Cut-out provides protection from running pump dry using a suction sensor.	Troubleshoot the system, and reset the frequency converter after the fault has been cleared.
A504_HIGH_SUCTION	The Suction pressure is above the [19-37] **High Suction Cut-out**.	High Suction Cut-out provides protection from running pump when there is sufficient suction pressure to meet system pressure requirements.	Troubleshoot the system, and reset the frequency converter after the fault has been cleared.

Warning/Alarm	Description	Cause	Remedy
A505_ALL_ZONE_FAIL	All assigned Feedback Transducer has been failed or disconnected in the system.	System will react whichever action assigned in the [19-40] **All Zones Failure Function**.	Check the connections on all the Analog input terminals. Control card terminals 53 and 54 for signals, terminal 55 common. General Purpose I/O Option Card terminals 11 and 12 for signals, terminal 10 common. Analog I/O Option Card terminals 1, 3, 5 for Signals, terminals 2, 4, 6 common. Check that the frequency converter programming and switch settings Match the analog signal type. Perform Input Terminal Signal Test.
A507_LOW_SYSTEM	The system pressure is below the [19-46] **Low System Limit**.	System has low pressure Warning/ Alarm which is not acceptable for pre-defined application	Troubleshoot the system, and reset the frequency converter after the fault has been cleared.
A508_SENSOR_FAULT	This warning will appear always if assigned to any feedback inputs. The signal on one of the analog inputs is less than 50% of the minimum value that is programmed for that input.	Broken wiring or faulty device sending the signal.	Check the connections on all the Analog input terminals. Control card terminals 53 and 54 for signals, terminal 55 common. General Purpose I/O option card terminals 11 and 12 for signals, terminal 10 common. Analog I/O Option Card terminals 1, 3, 5 for Signals, terminals 2, 4, 6 common. Check that the frequency converter programming and switch settings Match the analog signal type. Perform Input Terminal Signal test.
A509_VFD_RUN_FAIL/COMM_ER	Master fails to start any follower during the operation due to any unexpected stop condition of follower. Communication Error will occurs when master will not find other follower in communication.	Master has no longer control of Follower which has a communication error.	Troubleshoot the system for any communication cable broken.

Table 74: Application event

Event	Description
506_AUTO_SLEEP	Feedback value is above the [19-89] **Control Setpoint** - [19-25] **No Flow Restart Difference** value and [19-24] **No Flow Shutdown** is Enabled.

9 Troubleshooting

9.1 Start up and operation troubleshooting

Table 75: Troubleshooting

Symptom	Possible cause	Test	Solution
Display dark/No function	Missing or open fuses or circuit breaker tripped	See Pre-startup inspections table in this manual.	Check the input power source
	No power to the LCP	Check the LCP cable for proper connection or damage	Replace the faulty LCP or connection cable
	Shortcut on control voltage (terminal 12 or 50) or at control terminals	Check the 24 V control voltage supply for terminals 12/13 to 20-39 or 10 V supply for terminals 50 to 55	Wire the terminals properly
	Wrong LCP		Use only LCP #9K651.
	Wrong contrast setting		Press [status] + [▲]/[▼] to adjust the contrast
	Display (LCP) is defective	Test using a different LCP	Replace the faulty LCP or connection cable
	Internal voltage supply fault or SMPS is defective		Contact supplier
Intermittent display	Overloaded power supply (SMPS) due to improper control wiring or fault within the frequency converter	To rule out a problem in the control wiring, disconnect all control wiring by removing the terminal blocks.	If the display stays lit, then the problem is in the control wiring. Check the wiring for shorts or incorrect connections. If the display continues to cut out, follow the procedure for display dark.
Motor not running	Service switch open or missing motor connection	Check if the motor is connected and the connection is not interrupted (by a service switch or other device)	Connect the motor and check the service switch
	No mains power with 24 V DC option card	If the display is functioning but no output, check that mains power is applied to the frequency converter	Apply mains power to run the unit
	LCP Stop	Check if [Off] has been pressed	Press [Auto On] or [Hand On] (depending on operation mode) to run the motor
	Missing start signal (Standby)	Check *5–10 Terminal 18 Digital Input* for correct setting for terminal 18 (use default setting)	Apply a valid start signal to start the motor
	Motor coast signal active (Coasting)	Check *5–12 Coast inv.* for correct setting for terminal 27 (use default setting)	Apply 24 V on terminal 27 or program this terminal to No operation
	Wrong reference signal source	Check reference signals: Local, remote or bus reference? Preset reference active? Terminal connection correct? Scaling of terminals correct? Reference signal available?	Program correct settings. Check *3–13 Reference Site*. Set preset reference active in parameter group *3–1* References*. Check for correct wiring. Check scaling or terminals. Check reference signal.

Symptom	Possible cause	Test	Solution
Motor running in wrong direction	Motor rotation limit	Check that *4–10 Motor Speed Direction* is programmed correctly.	Program correct settings
	Active reverse signal	Check if a reversing command is programmed for the terminal in parameter group *5–1* Digital inputs*.	Deactivate reversing signal
	Wrong motor phase connection		
Motor is not reaching maximum speed	Frequency limits set wrong	Check output limits in *4–13 Motor Speed High Limit [RPM]*, *4–14 Motor Speed High Limit [Hz]* and *4–19 Max Output Frequency*.	Program correct limits
	Reference input signal not scaled correctly	Check references input signal scaling in *6–0* Analog I/O Mode* and parameter group *3–1* References*. Reference limits in parameter group *3–0* Reference Limit*.	Program correct settings
Motor speed unstable	Possible incorrect parameter settings	Check the settings of all motor parameters, including all motor compensation settings. For closed loop operation, check PID settings.	Check settings in parameter group *1–6* Analog I/O mode*.
Motor runs rough	Possible over-magnetization	Check for incorrect motor settings in all parameters	Check motor settings in parameter groups *1–2* Motor Data*, *1–3* Adv Motor Data*, and *1–5* Load Indep. Setting*.
Motor will not brake	Possible incorrect settings in the brake parameters. Possible too short ramp down times	Check brake parameters. Check ramp time settings	Check parameter group *2–0* DC Brake* and *3–0* Reference Limits*.
Open power fuses or circuit breaker trip	Phase to phase short	Motor or panel has a short phase to phase. Check motor and panel phase for shorts	Eliminate any shorts detected
	Motor overload	Motor is overloaded for the application	Perform startup test and verify motor current is within specifications. If motor current is exceeding nameplate full load current, motor may run only with reduced load. Review the specifications for the application.
	Loose connections	perform pre-startup check for loose connections	Tighten loose connections
Input current imbalance greater than 3% (not applicable for single phase drives)	Problem with mains power (see Alarm 4 input phase loss description in the Warnings and Alarms table)	Rotate input power leads into the frequency converter one position A to B, B to C to A.	If imbalanced leg follows the wire, it is a power problem. Check mains power supply.
	Problem with the frequency converter	Rotate input power leads into the frequency converter one position: A to B, B to C, C to A	If imbalance leg stays on same input terminal, it is a problem with the unit. Contact the supplier.
Motor current imbalance greater than 3%	Problem with motor or motor wiring	Rotate output motor leads one position: U to V, V to W, W to U.	If imbalanced leg follows the wire, the problem is in the motor or motor wiring. Check motor and motor wiring.
	Problem with the frequency converters	Rotate output motor leads one position: U to V, V to W, W to U.	If imbalance leg stays on same output terminal, it is a problem with the unit. Contact the supplier.

Symptom	Possible cause	Test	Solution
Acoustic noise or vibration (for example, a pump impeller blade makes noise or vibrations at certain frequencies)	Resonances, for example, in the motor/pump system	Bypass critical frequencies by using parameters in parameter group *4–6* Speed Bypass*	Check if noise and/or vibration have been reduced to an acceptable limit
		Turn off over-modulation in *14–03 Overmodulation*	
		Change switching pattern and frequency in parameter group *14–0* Inverter Switching*	
		Increase Resonance Dampening in *1–64 Resonance Dampening*	

10 Technical Specifications

10.1 Power-dependent specifications

Table 76: Mains supply 1 x 200–240 V AC – Normal overload 110% for 1 minute, P1K1-P22K

Type Designation	P1K1	P1K5	P2K2	P3K7	P5K5	P7K5	P15K	P22K
Typical shaft output [kW]	1.1	1.5	2.2	3.7	5.5	7.5	15	22
Typical shaft output at 240 V [hp]	1.5	2.0	2.9	4.9	7.5	10	20	30
IP20/Chassis[6)]	A3	–	–	–	–	–	–	–
IP21/Type 1	–	B1	B1	B1	B1	B2	C1	C2
IP55/Type 3R/12[11)]	A5	B1	B1	B1	B1	B2	C1	C2
IP66/Type 4X	A5	B1	B1	B1	B1	B2	C1	C2
Output current								
Continuous (3x200–240 V) [A]	6.6	7.5	10.6	16.7	24.2	30.8	59.4	88
Intermittent (3x200–240 V) [A]	7.3	8.3	11.7	18.4	26.6	33.4	65.3	96.8
Continuous kVA at 208 V [kVA]	2.4	2.7	3.8	6.0	8.7	11.1	21.4	31.7
Maximum input current								
Continuous (1x200–240 V) [A]	12.5	15	20.5	32	46	59	111	172
Intermittent (1x200–240 V) [A]	13.8	16.5	22.6	35.2	50.6	64.9	122.1	189.2
Maximum pre-fuses [A]	20	30	40	60	80	100	150	200
Additional specifications								
Maximum cable size (mains, motor, brake) [mm^2 (AWG)[3)]] [2)]	0.2–4 (4–10)				10 (7)	35 (2)	50 (1/0)	95 (4/0)
Maximum cable size[2)] for mains with disconnect switch [mm^2 (AWG)[3)]] [2)]	16 (6)	16 (6)				25 (3)	50 (1/0)	2x50 (2x1/0) [9)10)]
Maximum cable size for mains without disconnect switch [mm^2 (AWG)[3)]] [2)]	16 (6)	16 (6)				25 (3)	50 (1/0)	95 (4/0)
Cable insulation temperature rating [°C (°F)]	75 (167)							
Estimated power loss[5)] at rated maximum load [W]	44	30	44	74	110	150	300	440
Efficiency[4)]	0.968	0.98	0.98	0.98	0.98	0.98	0.98	0.98

Table 77: Mains supply 3 x 200–240 V AC – Normal overload 110% for 1 minute, P1K1-P3K7

Type Designation	P1K1	P1K5	P2K2	P3K0	P3K7
Typical shaft output [kW]	1.1	1.5	2.2	3.0	3.7
Typical shaft output [hp] at 208 V	1.5	2.0	2.9	4.0	4.9
IP20/chassis[6)]	A2	A2	A2	A3	A3
IP55/Type 3R/12[11)]	A4/A5	A4/A5	A4/A5	A5	A5
IP66/Type 4X	A4/A5	A4/A5	A4/A5	A5	A5
Output current					
Continuous (3 x 200–240 V) [A]	6.6	7.5	10.6	12.5	16.7
Intermittent (3 x 200–240 V) [A]	7.3	8.3	11.7	13.8	18.4
Continuous kVA (208 V AC) [kVA]	2.38	2.70	3.82	4.5	6.00
Maximum input current					
Continuous (3 x 200–240 V) [A]	5.9	6.8	9.5	11.3	15.0
Intermittent (3 x 200–240 V) [A]	6.5	7.5	10.5	12.4	16.5

Type Designation	P1K1	P1K5	P2K2	P3K0	P3K7
Additional specifications					
Estimated power loss at rated maximum load [W][5)]	63	82	116	155	185
IP20/Chassis, IP21/Type 1 maximum cable size[8)] (mains, motor, brake, and load sharing) [mm^2 (AWG)[3)]] [2)]	4, 4, 4 (12, 12, 12) (Minimum 0.2 (24))				
IP55/Type 3R/12, IP66/Type 4X maximum cable size[8)] (mains, motor, brake, and load sharing) [mm^2 (AWG)[3)]] [2)]	4, 4, 4 (12, 12, 12)				
Maximum cable size with disconnect[8)] [mm^2 (AWG)[3)]] [2)]	6, 4, 4 (10, 12, 12)				
Efficiency[4)]	0.96	0.96	0.96	0.96	0.96

Table 78: Mains supply 3 x 200–240 V AC – Normal overload 110% for 1 minute, P5K5-18K

Type Designation	P5K5	P7K5	P11K	P15K	P18K
Typical shaft output [kW]	5.5	7.5	11	15	18.5
Typical shaft output [hp] at 208 V	7.5	10	15	20	25
IP20/chassis[7)]	B3	B3	B3	B4	B4
IP21/Type 1	B1	B1	B1	B2	C1
IP55/Type 3R/12[11)]	B1	B1	B1	B2	C1
IP66/Type 4X	B1	B1	B1	B2	C1
Output current					
Continuous (3 x 200–240 V) [A]	24.2	30.8	46.2	59.4	74.8
Intermittent (3 x 200–240 V) [A]	26.6	33.9	50.8	65.3	82.3
Continuous KVA (208 V VA) [kVA]	8.7	11.1	16.6	21.4	26.9
Maximum input current					
Continuous (3 x 200–240 V) [A]	22.0	28.0	42.0	54.0	68.0
Intermittent (3 x 200–240 V) [A]	24.2	30.8	46.2	59.4	74.8
Additional specifications					
Estimated power loss at rated maximum load [W][5)]	269	310	447	602	737
IP20/Chassis maximum cable size[8)] (mains, brake, motor, and load sharing) [mm^2 (AWG)[3)]] [2)]	10, 10 (8,8–)		35,-,- (2,-,-)	35 (2)	50 (1)
IIP21/Type 1, IP55/Type 3R/12, IP66/Type 4X maximum cable size[8)] (mains, motor) [mm^2 (AWG)[3)]] [2)]	10, 10 (8, 8–)		35, 25, 25 (2, 4, 4)	50 (1)	
IP21/Type 1, IP55/Type 3R/12, IP66/Type 4X maximum cable size[8)] (brake, load sharing) [mm^2 (AWG)[3)]] [2)]	16, 10, 16 (6, 8, 6)		35,-,- (2,-,-)	50 (1)	
Efficiency[4)]	0.96	0.96	0.96	0.96	0.96

Table 79: Mains supply 3 x 200–240 V AC – Normal overload 110% for 1 minute, P22K-P45K

Type Designation	P22K	P30K	P37K	P45K
Typical shaft output [kW]	22	30	37	45
Typical shaft output [hp] at 208 V	30	40	50	60
IP20/chassis[7)]	C3	C3	C4	C4
IP21/Type 1	C1	C1	C2	C2
IP55/Type 3R/12[11)]	C1	C1	C2	C2
IP66/Type 4X	C1	C1	C2	C2
Output current				
Continuous (3 x 200–240 V) [A]	88.0	115	143	170
Intermittent (3 x 200–240 V) [A]	96.8	127	157	187

Type Designation	P22K	P30K	P37K	P45K
Continuous KVA (208 V AC) [kVA]	31.7	41.4	51.5	61.2
Maximum input current				
Continuous (3 x 200–240 V) [A]	80.0	104.0	130.0	154.0
Intermittent (3 x 200–240 V) [A]	88.0	114.0	143.0	169.0
Additional specifications				
Estimated power loss at rated maximum load [W][5)]	845	1140	1353	1636
IP20/Chassis maximum cable size[8)] (mains, brake, motor, and load sharing) [mm^2 (AWG)[3)]] [2)]	50 (1)	150 (300 MCM)		
IP21/Type 1, IP55/Type 3R/12, IP66/Type 4X maximum cable size[8)] (mains, motor) [mm^2 (AWG)[3)]] [2)]	50 (1)	150 (300 MCM)		
IP21/Type 1, IP55/Type 3R/12, IP66/Type 4X maximum cable size[8)] (brake, load sharing) [mm^2 (AWG)[3)]] [2)]	50 (1)	95 (3/0)		
Efficiency[4)]	0.97	0.97	0.97	0.97

Table 80: Mains supply 3 x 380–480 V AC – Normal overload 110% for 1 minute, P1K1-P7K5

Type Designation	P1K1	P1K5	P2K2	P3K0	P4K0	P5K5	P7K5
Typical shaft output [kW]	1.1	1.5	2.2	3.0	4	5.5	7.5
Typical shaft output [hp] at 460 V	1.5	2.0	2.9	4.0	5.0	7.5	10
IP20/Chassis[6)]	A2	A2	A2	A2	A2	A3	A3
IP55/Type 3R/12[11)]	A4/A5	A4/A5	A4/A5	A4/A5	A4/A5	A5	A5
IP66/Type 4X	A4/A5	A4/A5	A4/A5	A4/A5	A4/A5	A5	A5
Output current							
Continuous (3 x 380–440 V) [A]	3	4.1	5.6	7.2	10	13	16
Intermittent (3 x 380–440 V) [A]	3.3	4.5	6.2	7.9	11	14.3	17.6
Continuous (3 x 441–480 V) [A]	2.7	3.4	4.8	6.3	8.2	11	14.5
Intermittent (3 x 441–480 V) [A]	3.0	3.7	5.3	6.9	9.0	12.1	15.4
Continuous kVA (400 V AC) [kVA]	2.1	2.8	3.9	5.0	6.9	9.0	11.0
Continuous kVA (460 V AC) [kVA]	2.4	2.7	3.8	5.0	6.5	8.8	11.6
Maximum input current							
Continuous (3 x 380–440 V) [A]	2.7	3.7	5.0	6.5	9.0	11.7	14.4
Intermittent (3 x 380–440 V) [A]	3.0	4.1	5.5	7.2	9.9	12.9	15.8
Continuous (3 x 441–480 V) [A]	2.7	3.1	4.3	5.7	7.4	9.9	13.0
Intermittent (3 x 441–480 V) [A]	3.0	3.4	4.7	6.3	8.1	10.9	14.3
Additional specifications							
Estimated power loss at rated maximum load [W][5)]	58	62	88	116	124	187	255
IP20/Chassis, IP21/Type 1 maximum cable size[8)] (mains, motor, brake, and load sharing) [mm^2 (AWG)[3)]] [2)]	4, 4, 4 (12, 12, 12) (Minimum 0.2 (24))						
IP55/Type 3R/12, IP66/Type 4X maximum cable size[8)] (mains, motor, brake, and load sharing) [mm^2 (AWG)[3)]] [2)]	4, 4, 4 (12, 12, 12)						
Maximum cable size[8)] with disconnect [mm^2 (AWG)[3)]] [2)]	6, 4, 4 (10, 12, 12)						
Efficiency[4)]	0.96	0.97	0.97	0.97	0.97	0.97	0.97

Table 81: Mains supply 3 x 380–480 V AC – Normal overload 110% for 1 minute, P11K-P30K

Type Designation	P11K	P15K	P18K	P22K	P30K
Typical shaft output [kW]	11	15	18.5	22	30
Typical shaft output [hp] at 460 V	15	20	25	30	40

Type Designation	P11K	P15K	P18K	P22K	P30K
IP20/chassis[7)]	B3	B3	B3	B4	B4
IP21/Type 1	B1	B1	B1	B2	B2
IP55/Type 3R/12[11)]	B1	B1	B1	B2	B2
IP66/Type 4X	B1	B1	B1	B2	B2
Output current					
Continuous (3 x 380–439 V) [A]	24	32	37.5	44	61
Intermittent (3 x 380–439 V) [A]	26.4	35.2	41.3	48.4	67.1
Continuous (3 x 440–480) [A]	21	27	34	40	52
Intermittent (3 x 440–480 V) [A]	23.1	29.7	37.4	44	61.6
Continuous kVA (400 V AC) [kVA]	16.6	22.2	26	30.5	42.3
Continuous kVA (460 V AC) [kVA]	16.7	21.5	27.1	31.9	41.4
Maximum input current					
Continuous (3 x 380–439 V) [A]	22	29	34	40	55
Intermittent (3 x 380–439 V) [A]	24.2	31.9	37.4	44	60.5
Continuous (3 x 440–480 V) [A]	19	25	31	36	47
Intermittent (3 x 440–480 V) [A]	20.9	27.5	34.1	39.6	51.7
Additional specifications					
Estimated power loss at rated maximum load [W][5)]	278	392	465	525	698
IP20/Chassis maximum cable size[8)] (mains, motor, and load sharing) [mm^2 (AWG)[3)]] [2)]	16, 10,- (8, 8,-)		35,-,- (2,-,-)		35 (2)
IP21/Type 1, IP55/Type 3R/12, IP66/Type 4X maximum cable size[8)] (mains, motor) [mm^2 (AWG)[3)]] [2)]	10, 10, 16 (6, 8, 6)		35, 25, 25 (2, 4, 4)		50 (1)
IP21/Type 1, IP55/Type 3R/12, IP66/Type 4X maximum cable size[8)] (brake, load sharing) [mm^2 (AWG)[3)]] [2)]	10, 10,- (8, 8,-)		35,-,- (2,-,-)		50 (1)
With mains disconnect switch included [mm^2 (AWG)[3)]] [2)]	16 (6)				
Efficiency[4)]	0.98	0.98	0.98	0.98	0.98

Table 82: Mains supply 3 x 380–480 V AC – Normal overload 110% for 1 minute, P37K-P90K

Type Designation	P37K	P45K	P55K	P75K	P90K
Typical shaft output [kW]	37	45	55	75	90
Typical shaft output [hp] at 460 V	50	60	75	100	125
IP20/Chassis[7)]	B4	C3	C3	C4	C4
IP21/Type 1	C1	C1	C1	C2	C2
IP55/Type 3R/12[11)]	C1	C1	C1	C2	C2
IP66/Type 4X	C1	C1	C1	C2	C2
Output current					
Continuous (3 x 380–439 V) [A]	73	90	106	147	177
Intermittent (3 x 380–439 V) [A]	80.3	99	117	162	195
Continuous (3 x 440–480 V) [A]	65	80	105	130	160
Intermittent (3 x 440–480 V) [A]	71.5	88	116	143	176
Continuous kVA (400 V AC) [kVA]	50.6	62.4	73.4	102	123
Continuous kVA (460 V AC) [kVA]	51.8	63.7	83.7	104	128
Maximum input current					
Continuous (3 x 380–439 V) [A]	66	82	96	133	161
Intermittent (3 x 380–439 V) [A]	72.6	90.2	106	146	177

Type Designation	P37K	P45K	P55K	P75K	P90K
Continuous (3 x 440–480 V) [A]	59	73	95	118	145
Intermittent (3 x 440–480 V) [A]	64.9	80.3	105	130	160
Additional specifications					
Estimated power loss at rated maximum load [A][5)]	739	843	1083	1384	1474
IP20/Chassis maximum cable size (mains, brake, motor, and load sharing) [mm^2 (AWG)[3)]] [2)]	50 (1)		150 (300 MCM)		
IP21/Type 1, IP55/Type 3R/12, IP66/Type 4X maximum cable size (mains, motor) [mm^2 (AWG)[3)]] [2)]			150 (300 MCM)		
IP21/Type 1, IP55/Type 3R/12, IP66/Type 4X maximum cable size (brake, load sharing) [mm^2 (AWG)[3)]] [2)]			95 (3/0)		
With mains disconnect switch included [mm^2 (AWG)[3)]] [2)]	35 (2)	35 (2)	35 (2)	70 (3/0)	185 (kcmil350)
Efficiency[4)]	0.98	0.98	0.98	0.98	0.98

Table 83: Mains supply 3 x 525–600 V AC - Normal overload 110% for 1 minute, P1K1-P7K5

Type Designation	P1K1	P1K5	P2K2	P3K0	P3K7	P4K0	P5K5	P7K5
Typical shaft output [kW]	1.1	1.5	2.2	3.0	3.7	4.0	5.5	7.5
Typical shaft output [hp]	1.5	2.0	2.9	4.0	5.0	5.5	7.5	10
IP20/Chassis[6)7)]	A3	A3	A3	A3	A2	A3	A3	A3
IP21/Type 1	A3	A3	A3	A3	A2	A3	A3	A3
IP55/Type 3R/12[11)]	A5	A5	A5	A5	A5	A5	A5	A5
IP66/Type 4X	A5	A5	A5	A5	A5	A5	A5	A5
Output current								
Continuous (3 x 525–550 V) [A]	2.6	2.9	4.1	5.2	–	6.4	9.5	11.5
Intermittent (3 x 525–550 V) [A]	2.9	3.2	4.5	5.7	–	7.0	10.5	12.7
Continuous (3 x 525–600 V) [A]	2.4	2.7	3.9	4.9	–	6.1	9.0	11.0
Intermittent (3 x 525–600 V) [A]	2.6	3.0	4.3	5.4	–	6.7	9.9	12.1
Continuous kVA (525 V AC) [kVA]	2.5	2.8	3.9	5.0	–	6.1	9.0	11.0
Continuous kVA (575 V AC) [kVA]	2.4	2.7	3.9	4.9	–	6.1	9.0	11.0
Maximum input current								
Continuous (3 x 525–600 V) [A]	2.4	2.7	4.1	5.2	–	5.8	8.6	10.4
Intermittent (3 x 525–600 V) [A]	2.7	3.0	4.5	5.2	–	6.4	9.5	11.5
Additional specifications								
Estimated power loss at rated maximum load [W][5)]	50	65	92	122	–	145	195	261
IP20/Chassis maximum cable size[8)] (mains, motor, brake, and load sharing) [mm^2 (AWG)[3)]] [2)]	4, 4, 4 (12, 12, 12) (Minimum 0.2 (24))							
IP21/Type 1, IP55/Type 3R/12, IP66/Type 4X maximum cable size[8)] (mains, motor, brake, and load sharing) [mm^2 (AWG)[3)]] [2)]	4, 4, 4 (12, 12, 12) (Minimum 0.2 (24))							
Maximum cable size[8)] with disconnect [mm^2 (AWG)[3)]] [2)]	6, 4, 4 (12, 12 ,12)							
Mains disconnect switch included [mm^2 (AWG)[3)]] [2)]:	4 (12)							
Efficiency[4)]	0.97	0.97	0.97	0.97	–	0.97	0.97	0.97

Table 84: Mains supply 3 x 525–600 V AC - Normal overload 110% for 1 minute, P11K-P90K

Type Designation	P11K	P15K	P18K	P22K	P30K	P37K	P45K	P55K	P75K	P90K
Typical shaft output [kW]	11	15	18.5	22	30	37	45	55	75	90
Typical shaft output [hp]	15	20	25	30	40	50	60	75	100	125

Type Designation	P11K	P15K	P18K	P22K	P30K	P37K	P45K	P55K	P75K	P90K
IP20/Chassis	B3	B3	B3	B4	B4	B4	C3	C3	C4	C4
IP21/Type 1	B1	B1	B1	B2	B2	C1	C1	C1	C2	C2
IP55/Type 3R/12[11)]	B1	B1	B1	B2	B2	C1	C1	C1	C2	C2
IP66/Type 4X	B1	B1	B1	B2	B2	C1	C1	C1	C2	C2
Output current										
Continuous (3 x 525–550 V) [A]	19	23	28	36	43	54	65	87	105	137
Intermittent (3 x 525–550 V) [A]	21	25	31	40	47	59	72	96	116	151
Continuous (3 x 525–600 V) [A]	18	22	27	34	41	52	62	83	100	131
Intermittent (3 x 525–600 V) [A]	20	24	30	37	45	57	68	91	110	144
Continuous kVA (525 V AC) [kVA]	18.1	21.9	26.7	34.3	41	51.4	61.9	82.9	100	130.5
Continuous kVA (575 V AC) [kVA]	17.9	21.9	26.9	33.9	40.8	51.8	61.7	82.7	99.6	130.5
Maximum input current										
Continuous (3 x 525–600 V) [A]	17.2	20.9	25.4	32.7	39	49	59	78.9	95.3	124.3
Intermittent (3 x 525–600 V) [A]	19	23	28	36	43	54	65	87	105	137
Additional specifications										
Estimated power loss at rated maximum load [W][5)]	300	400	475	525	700	750	850	1100	1400	1500
IP20/Chassis maximum cable size[8)] (mains, brake, and load sharing) [mm^2 (AWG)[3)]] [2)]	10, 10, - (8, 8, -)		35, -, - (2, -, -)			50,-,- (1,-,-)		150 (300 MCM)		
IP21, IP55, IP66 maximum cable size[8)] (mains, brake, and load sharing) [mm^2 (AWG)[3)]] [2)]	16, 10, 10 (6, 8, 8)		35,-,-(2,-,-)		50,-,- (1,-,-)			95 (4/0)		
IP21, IP55, IP66 maximum cable cross-section (motor) [mm^2 (AWG)]	10, 10, - (8, 8,-)		35, 25, 25 (2, 4, 4)		50,-,- (1,-,-)			150 (300 MCM)		
Maximum cable size[8)] with disconnect [mm^2 (AWG)[3)]] [2)]	16, 10, 10 (6, 8, 8)				50, 35, 35 (1, 2, 2)			95, 70, 70 (3/0, 2/0, 2/0)	185, 150, 120 (350 MCM, 300 MCM, 4/0)	
Mains disconnect switch included [mm^2 (AWG)[3)]] [2)]	16 (6)					35 (2)			70 (3/0)	185 (kcmil 350)
Efficiency[4)]	0.98	0.98	0.98	0.98	0.98	0.98	0.98	0.98	0.98	0.98

Table 85: Mains supply 3x525–690 V AC - Normal overload 110% for 1 minute, P1K1-P7K5

Type Designation	P1K1	P1K5	P2K2	P3K0	P4K0	P5K5	P7K5
Typical shaft output [kW]	1.1	1.5	2.2	3.0	4.0	5.5	7.5
Typical shaft output [hp]	1.5	2.0	3.0	4.0	5.5	7.5	10
Enclosure IP20 (only)	A3	A3	A3	A3	A3	A3	A3
Output current							
Continuous (3 x 525–550 V) [A]	2.1	2.7	3.9	4.9	6.1	9.0	11
Intermittent (3 x 525–550 V) [A]	3.4	4.3	6.2	7.8	9.8	14.4	17.6
Continuous kVA (3x551–690 V) [kVA]	1.6	2.2	3.2	4.5	5.5	7.5	10
Intermittent kVA (3x551–690 V) [kVA]	2.6	3.5	5.1	7.2	8.8	12	16
Continuous kVA (525 V AC) [kVA]	1.9	2.5	3.5	4.5	5.5	8.2	10
Intermittent kVA (690 V AC) [kVA]	1.9	2.6	3.8	5.4	6.6	9.0	12
Maximum input current							
Continuous (3x525–550 V) [A]	1.9	2.4	3.5	4.4	5.5	8.0	10

Type Designation	P1K1	P1K5	P2K2	P3K0	P4K0	P5K5	P7K5
Intermittent (3x525–550 V) [A]	3.0	3.9	5.6	7.1	8.8	13	16
Continuous kVA (3x551–690 V) [kVA]	1.4	2.0	2.9	4.0	4.9	6.7	9.0
Intermittent kVA (3x551–690 V) [kVA]	2.3	3.2	4.6	6.5	7.9	10.8	14.4
Additional specifications							
Estimated power loss at rated maximum load [W][5)]	44	60	88	120	160	220	300
Maximum cable cross-section (mains, motor, brake, and load sharing) [mm^2 (AWG)]	6, 4, 4 (10, 12, 12) (minimum 0.2 (24))						
Maximum cable cross-section with disconnect	6, 4, 4 (10, 12, 12)						
Efficiency[4)]	0.96	0.96	0.96	0.96	0.96	0.96	0.96

Table 86: Mains supply 3x525–690 V AC - Normal overload 110% for 1 minute, P11K-P30K

Type Designation	P11K	P15K	P18K	P22K	P30K
High/Normal Load	NO	NO	NO	NO	NO
Typical shaft output at 550 V [kW]	7.5	11	15	18.5	22
Typical shaft output at 690 V [kW]	11	15	18.5	22	30
Typical shaft output [hp]	15	20	25	30	40
IP20/Chassis	B4	B4	B4	B4	B4
IP21/NEMA 1	B2	B2	B2	B2	B2
IP55/NEMA 12	B2	B2	B2	B2	B2
Output current					
Continuous (3 x 525–550 V) [A]	14	19	23	28	36
Intermittent (60 s overload) (3x525–550 V) [A]	22.4	20.9	25.3	30.8	39.6
Continuous (3 x 551–690 V) [A]	13	18	22	27	34
Intermittent (60 s overload) (3x551–690 V) [A]	20.8	19.8	24.2	29.7	37.4
Continuous kVA (550 V AC) [kVA]	13.3	18.1	21.9	26.7	34.3
Continuous kVA (690 V AC) [kVA]	15.5	21.5	26.3	32.3	40.6
Maximum input current					
Continuous (at 550 V) [A]	15	19.5	24	29	36
Intermittent (60 s overload) (at 550 V) [A]	23.2	21.5	26.4	31.9	39.6
Continuous (at 690 V) [A]	14.5	19.5	24	29	36
Intermittent (60 s overload) (at 690 V) [A]	23.2	21.5	26.4	31.9	39.6
Maximum pre-fuses[2)] [A]	63	63	63	80	100
Additional specifications					
Estimated power loss at rated maximum load [W][5)]	150	220	300	370	440
Maximum cable cross-section (mains, motor, load sharing, and brake) [mm^2 (AWG)]	35, 25, 25 (2, 4, 4)				
Maximum cable size with mains disconnect [mm^2]/(AWG)[2)]	16, 10, 10 (6, 8, 8)				
Efficiency[4)]	0.98	0.98	0.98	0.98	0.98

Table 87: Mains supply 3x525–690 V AC - Normal overload 110% for 1 minute, P37K-P90K

Type Designation	P37K	P45K	P55K	P75K	P90K
High/Normal Load	NO	NO	NO	NO	NO
Typical shaft output at 550 V [kW]	30	37	45	55	75
Typical shaft output at 690 V [kW]	37	45	55	75	90
Typical shaft output at 575 V [hp]	50	60	75	100	125

Type Designation	P37K	P45K	P55K	P75K	P90K
IP20/Chassis	B4	C3	C3	D3h	D3h
IP21/NEMA 1	C2	C2	C2	C2	C2
IP55/NEMA 12	C2	C2	C2	C2	C2
Output current					
Continuous (3 x 525–550 V) [A]	43	54	65	87	105
Intermittent (60 s overload) (3x525–550 V) [A]	47.3	59.4	71.5	95.7	115.5
Continuous (3 x 551–690 V) [A]	41	52	62	83	100
Intermittent (60 s overload) (3x551–690 V) [A]	45.1	57.2	68.2	91.3	110
Continuous kVA (550 V AC) [kVA]	41	51.4	61.9	82.9	100
Continuous kVA (690 V AC) [kVA]	49	62.1	74.1	99.2	119.5
Maximum input current					
Continuous (at 550 V) [A]	49	59	71	87	99
Intermittent (60 s overload) (at 550 V) [A]	53.9	64.9	78.1	95.7	108.9
Continuous (at 690 V) [A]	48	58	70	86	94.3
Intermittent (60 s overload) (at 690 V) [A]	52.8	63.8	77	94.6	112.7
Maximum pre-fuses[2)] [A]	125	160	160	160	–
Additional specifications					
Estimated power loss at rated maximum load [W]	740	900	1100	1500	1800
Maximum cable cross-section (mains and motor) [mm^2 (AWG)]	150 (300 MCM)				
Maximum cable cross-section (load sharing and brake) [mm^2 (AWG)]	95 (3/0)				
Maximum cable size with mains disconnect [mm^2]/(AWG)[2)]	95, 70, 70 (3/0, 2/0, 2/0)			185, 150, 120 (350 MCM, 300 MCM, 4/0)	
Efficiency[4)]	0.98	0.98	0.98	0.98	0.98

Table 88: Main supply 3 x 380–480 V AC – N110–N315

Type Designation	N110	N132	N160	N200	N250	N315
Normal Load*	NO	NO	NO	NO	NO	NO
Typical shaft output at 400 V [kW]	110	132	160	200	250	315
Typical shaft output at 460 V [hp]	150	200	250	300	350	450
Typical shaft output at 480 V [kW]	132	160	200	250	315	355
Enclosure IP21 (Type 1)/IP55 (Type 12)	D1h	D1h	D1h	D2h	D2h	D7h
Enclosure IP54	D1h	D1h	D1h	D2h	D2h	D2h
Enclosure IP20	D3h	D3h	D3h	D4h	D4h	D4h
Output current						
Continuous at 400 V) [A]	212	260	315	395	480	588
Intermittent (60 sec overload) (at 400 V) [A]	233	286	347	435	528	647
Continuous (at 460/480 V) [A]	190	240	302	361	443	535
Intermittent (60 sec overload) (at 460/480 V) [A]	209	264	332	397	487	588
Continuous KVA (at 400 V) [KVA]	147	180	218	274	333	407
Continuous KVA (at 460 V) [KVA]	151	191	241	288	353	426
Maximum input current						
Continuous (at 400 V) [A]	204	251	304	381	463	567
Continuous (at 460/480V) [A]	183	231	291	348	427	516

Type Designation	N110	N132	N160	N200	N250	N315
Maximum cable size, line power motor, brake and load share [mm^2 (AWG^2)]	2 x 95 (2 x 3/0)			2 x 185 2 x 350 mcm)		
Maximum external mains fuses [A][2)]	315	350	400	550	630	800
Estimated power loss[5)] at rated maximum load [W][4)], 400 V [W]	2555	2949	3764	4109	5129	6663
Estimated power loss[5)] at rated maximum load [W][4)], 460 V [W]	2257	2719	3612	3561	4558	5703
Weight, enclosure IP21, IP54 [kg (lb)]	62 (137)			125 (276)		
Weight, enclosure IP00 [kg (lb)]	62 (137)			125 (276)		
Efficiency[4)]	0.98					
Output frequency	0–590 Hz					
Heatsink Overtemp. trip [°C (°F)]	110°C (230°F)					
Power card ambient trip [°C (°F)]	75°C (167°F)					

*Normal overload = 110% current for 60s

Table 89: Supply 3 x 525–690 V AC

Type Designation	N110	N132	N160	N200	N250	N315	N400
Normal Load*	NO	NO	NO	NO	NO	NO	NO
Typical shaft output at 550 V [kW]	90	110	132	160	200	250	315
Typical shaft output at 575 V [hp]	125	150	200	250	300	350	400
Typical shaft output at 690 V [kW]	110	132	160	200	250	315	400
Enclosure IP21 (Type 1)/IP55 (Type 12)	D5h	D5h	D5h	D7h	D7h	D7h	D7h
Enclosure IP54	D1h	D1h	D1h	D2h	D2h	D2h	D2h
Enclosure IP54 (Type 3R)	D3h	D3h	D3h	D4h	D4h	D4h	D4h
Output current							
Continuous at 550 V) [A]	137	162	201	253	303	360	418
Intermittent (60 sec overload) (at 550 V) [A]	151	178	221	278	333	396	460
Continuous (at 575/690 V) [A]	131	155	192	242	290	344	400
Intermittent (60 sec overload) (at 575/690 V) [A]	144	171	211	266	319	378	440
Continuous KVA (at 550 V) [KVA]	131	154	191	241	289	343	398
Continuous KVA (at 550 V) [KVA]	130	154	191	241	289	343	398
Continuous KVA (at 690 V) [KVA]	157	185	229	289	347	311	478
Maximum input current							
Continuous (at 550 V) [A]	130	158	198	245	289	343	398
Continuous (at 575 V) [A]	124	151	189	234	289	343	398
Continuous (at 690 V) [A]	128	155	197	240	347	411	478
Maximum cable size, mains motor, brake and load share [mm^2 (AWG^2)]	2 x 95 (2 x 3/0)			2 x 185 2 x 350 mcm)			
Maximum external pre-fuses [A][2)]	315	315	350	350	400	500	550
Estimated power loss[5)] at rated maximum load [W][4)], 600 V	1739	2099	2646	3071	3719	4460	5023
Estimated power loss[5)] at rated maximum load [W][4)], 690 V	1796	2165	2738	3172	3848	4610	5150
Weight, enclosure IP21, IP54 [kg (lb)]	62 (137)			125 (276)			
Weight, enclosure IP00 [kg (lb)	62 (137)			125 (276)			
Efficiency[4)]	0.98						
Output frequency	0–590 Hz						
Heatsink Overtemp. trip	110°C (230°F)						

Type Designation	N110	N132	N160	N200	N250	N315	N400
Power card ambient trip	80°C (176°F)						

*Normal overload=110% current for 60s

2) For type of fuse, see *Fuses and circuit breakers* on page 267.

3) American Wire Gauge.

4) Measured using 5 m (16 feet) screened motor cables at rated load and rated frequency.

5) The typical power loss at normal load conditions and expected to be within ±15% (tolerance relates to variety in voltage and cable conditions).

- Values are based on a typical motor efficiency (eff2/eff3 border line). Lower efficiency motor will also add to the power loss in the frequency converter and vice versa.
- If the switch frequency is raised from nominal the power losses may rise significantly.
- LCP and typical control card power consumptions are included. Further options and customer load may add up to 30 W to the losses. (Though typically only 4 W extra for a fully loaded control card or options for slot A or slot B, each).
- Although measurements are made with state of the art equipment, some measurement inaccuracy must be allowed for (±5%).

6) A2+A3 may be converted to IP21 using a conversion kit. (See Pricebook for conversion kit order numbers.)

7) B3+B4 and C3+C4 may be converted to IP21 using a conversion kit. (See Pricebook for conversion kit order numbers).

8) The three values for the max. cable cross-section are for single core, flexible wire and flexible wire with sleeve, respectively.

9) Two wires are required.

10) Variant not available in IP21.

11) UL Type 3R is not available in A4 frame size.

10.2 General technical data

Mains supply

Supply terminals	L1, L2, L3
Supply voltage	200–240 V ±10%
Supply voltage	380–480 V/525–600 V ±10%
Supply voltage	525–690 V ±10%

Mains voltage low/mains drop-out: During low mains voltage or a mains drop-out, the drive continues until the intermediate circuit voltage drops below the minimum stop level, which corresponds typically to 15% below the frequency converter's lowest rated supply voltage. Power-up and full torque cannot be expected at mains voltage lower than 10% below the frequency converter's lowest rated supply voltage.

Supply frequency 50/60 Hz ±5%

Maximum imbalance temporary between mains phases (not applicable for single phase drives)	3.0% of rated supply voltage
True power factor (λ)	≥ 0.9 nominal rated load
Displacement Power Factor (cos φ)	near unity (> 0.98)
Switching on input supply L1, L2, L3 (power-ups) ≥ 10 hp	maximum 2 times/minute
Switching on input supply L1, L2, L3 (power-ups) 15-100 hp	maximum 1 time/minute
Switching on input supply L1, L2, L3 (power-ups) ≥ 125 hp	maximum 1 time/2 minutes

Environment according to EN60664–1	overvoltage category III/pollutin degree 2

The unit is suitable for use on a circuit capable of delivering not more than 100,000 RMS symmetrical Amperes, 240/500/600/690 V maximum.

Motor output (U, V, W)

Output voltage	0–100% of supply voltage
Output frequency	0–590 Hz
Output frequency (110–250 kW)	0–590[1)] Hz
Switching on output	Unlimited
Ramp times	1–3600 s

[1)] Voltage and power dependent

Torque characteristics

Starting torque (constant torque)	maximum 110% for 60 s[1)]
Starting torque	maximum 135% up to 0.5 s[1)]
Overload torque (constant torque)	maximum 110% for 60 s[1)]
Starting torque (variable torque)	maximum 110% for 60 s[1)]
Overload torque (variable torque)	maximum 110% for 60 s
Torque rise time in VVC^{plus} (independent of fsw)	10 ms

[1)] Percentage relates to the nominal torque.

[2)] The torque response time depends on application and load but as a general rule, the torque step from 0 to reference is 4–5 x torque rise time.

Cable lengths and cross sections for control cables[1)]

Maximum motor cable length, screened	492 ft (150m)
Maximum motor cable length, unscreened	984 ft (300m)
Maximum cross-section to control terminals, flexible/ rigid wire without cable end-sleeves	0.0023 in^2 (1.5 mm^2)/16 AWG (2x0.75 mm^2)
Maximum cross-section to control terminals, flexible wire with cable end-sleeves	0.0016 in^2 (1 mm^2)/18 AWG
Maximum cross-section to control terminals, flexible wire with cable end-sleeves with collar	.0008 in^2 (0.5 mm^2)/20 AWG
Maximum cross section to control terminals	0.00039 in^2 (0.25 mm^2)

[1)] For power cables, see Power Dependent Specifications.

Digital inputs

Programmable digital inputs	4 (6)[1)]
Terminal number	18, 19, 27[1)], 29[1)], 32, 33
Logic	PNP or NPN
Voltage level	0–24 V DC
Voltage level, logic '0' PNP	<5 V DC
Voltage level l, logic '1' PNP	>10 V DC
Voltage level, logic '0' NPN[2)]	>19 V DC
Voltage level, logic '1' NPN[2)]	<14 V DC
Maximum voltage on input	28 V DC
Pulse frequency range	0–110 kHZ

(Duty cycle) Min. pulse width	4.5 ms
Input resistance, Ri	Approximately 4 kΩ

Analog inputs

Number of analog inputs	2
Terminal number	53, 54
Modes	Voltage or current
Mode select	Switch A54
Voltage mode	Switch A54 = U (left position)
Voltage level	0 V to 10 V (scaleable)
Input resistance Ri	Approximately 10 kΩ
Maximum voltage	±20 V
Current mode	Switch A54 = I (right position)
Current level	0/4 to 20 mA (scaleable)
Input resistance Ri	Approximately 200Ω
Maximum current	30 mA
Resolution for analog inputs	10 bit (+ sign)
Accuracy of analog inputs	Maximum error 0.5% of full scale
Bandwidth	20 Hz/100 Hz

The analog inputs are galvanically isolated from the supply voltage (PELV) and other high-voltage terminals.

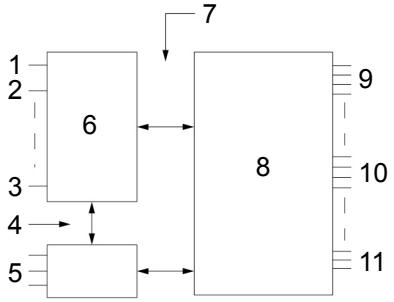

1. +24 V
2. 18
3. 37
4. Functional isolation
5. RS485
6. Control
7. PELV isolation
8. High voltage
9. Mains
10. Motor
11. DC-Bus

Figure 127: PELV isolation

Pulse

Programmable pulse	2/1
Terminal number pulse	29[1)], 33[2)] / 33[3)]
Maximum frequency at terminal 29, 33	110 kHZ (push-pull driven)
Maximum frequency at terminal 29, 33	5 kHZ (open collector)
Minimum frequency at terminal 29, 33	4 Hz
Voltage level	See Digital Inputs in the General Technical Data section.
Maximum voltage on input	28 V DC

Input resistance, Ri	Approximately 4kΩ
Pulse input accuracy (0.1–1 kHZ)	Maximum error: 0.1% of full scale
Encoder input accuracy (1–11 kHZ)	Maximum error: 0.05% of full scale

The pulse and encoder inputs (terminals 29, 32, 33) are galvanically isolated from the supply voltage (PELV) and other high-voltage terminals.

1) only

2) Pulse inputs are 29 and 33

Analog output

Number of programmable analog outputs	1
Terminal number	42
Current range at analog output	0/4–20 mA
Maximum load GND – analog output	500 Ω
Accuracy on analog output	Maximum error: 0.5% of full scale
Resolution on analog output	12 bit

The analog output is galvanically isolated from the supply voltage (PELV) and other high-voltage terminals.

Control card, RS-485 serial communication

Terminal number	68 (P, TX+, RX+), 69 (N, TX-, RX-)
Terminal number 61	Common for terminals 68 and 69

The RS-485 serial communication circuit is functionally separated from other central circuits and galvanically isolated from the supply-voltage (PELV).

Digital output

Programmable digital/pulse outputs	2
Terminal number	27, 29[1)]
Voltage level at digital/frequency output	0–24 V
Maximum output current (sink or source)	40 mA
Maximum load at frequency output	1 kΩ
Maximum capacitive load at frequency output	10 nF
Minimum output frequency at frequency output	0 Hz
Maximum output frequency at frequency output	32 kHZ
Accuracy of frequency output	Maximum error: 0.1% of full scale
Resolution of frequency outputs	12 bit

The digital output is galvanically isolated from the supply voltage (PELV) and other high-voltage terminals.

1) Terminal 27 and 29 can also be programmed as input.

Control card, 24 V DC output

Terminal number	12, 13
Output voltage	24 V +1, 3 V
Maximum load	200 mA

The 24 V DC supply is galvanically isolated from the supply voltage (PELV), but has the same potential as the analog and digital inputs and outputs.

Relay outputs

Programmable relay outputs	all kW: 2
Relay 01 terminal number	13 (break), 12 (make)
Maximum terminal load (AC-1)[1] on 13 (NC), 12 (NO) (resistive load)	240 V AV, 2 A
Maximum terminal load (AC-15)[1] (inductive load @ cosϕ 0.4)	240 V AC, 0.2 A
Maximum terminal load (DC-1)[1] on 12 (NO), 13 (NC) (resistive load)	60 V DC, 1 A
Maximum terminal load (DC-13)[1] (inductive load)	24 V DC, 0.1 A
Relay 02 (only) terminal number	4–6 (break), 4–5 (make)
Maximum terminal load (AC-1)[1] on 45 (NO) (resistive load)[2][3] overvoltage category II	400 V AC, 2 A
Maximum terminal load (AC-15)[1] on 45 (NO) (inductive load @ cosϕ 0.4)	240 V AC, 0.2 A
Maximum terminal load (DC-1)[1] on 45 (NO) (resistive load)	80 V DC, 2 A
Maximum terminal load (DC-13)[1] on 45 (NO) (inductive load)	24 V DC, 0.1 A
Maximum terminal load (AC-1)[1] on 46 (NC) (resistive load)	240 V AC, 2 A
Maximum terminal load (AC-15)[1] on 46 (NC) (inductive load @ cosϕ 0.4)	240 V AC, 0.2 A
Maximum terminal load (DC-1)[1] on 46 (NC) (resistive load)	50 V DC, 2 A
Maximum terminal load (DC-13)[1] on 46 (NC) (inductive load)	24 V DC, 0.1 A
Minimum terminal load on 13 (NC), 12 (NO), 46 (NC), 45 (NO)	24 V DC 10 mA, 24 V AC 20 mA
Environment according to EN 60664–1	overvoltage category III/pollution degree 2

[1] IEC 60947 part 4 and 5

The relay contacts are galvanically isolated from the rest of the circuit by reinforced isolation (PELV).

[2] Overvoltage category II

[3] UL applications 300 V AC 2A

Control card, 10 V DC output

Terminal number	50
Output voltage	10.5 V ±0.5 V
Maximum load	15 mA

The 10 V DC supply is galvanically isolated from the supply voltage (PELV) and other high-voltage terminals.

Control characteristics

Resolution of output frequency at 0–590 Hz	± 0.003 Hz
Repeat accuracy of Precise start/stop (terminals 18, 19)	≤± 0.1 ms
System response time (terminals 18, 19, 27, 29, 32, 33)	≤ 2 ms
Speed control range (open loop)	1:100 of synchronous speed
Speed control range (closed loop)	1:1000 of synchronous speed

Speed accuracy (open loop)	30–4000 rpm: error ±8 rpm
Speed accuracy (closed loop), depending on resolution of feedback device	0–6000 rpm: error ±0.15 rpm

All control characteristics are based on a 4–pole asynchronous motor

Environment

Enclosure IP Rating	IP20/Chassis, IP21/Type 1, IP55/Type 3R/12, IP66/Type 4X
Vibration test	1.0 g
Maximum relative humidity	5% – 93% (IEC 72133) Class 3K3 (non-condensing) during operation
Aggressive environment (IEC 60068243) H_2S test	class Kd
Ambient temperature	Maximum 50°C (24hour average maximum 45°C)
Minimum ambient temperature during full-scale operation	0°C
Minimum ambient temperature at reduced performance	10°C
Temperature during storage/transport	25 to +65/70°C
Maximum altitude above sea level without derating	1000 m
EMC standards, Emission	EN 61800–3, EN 61000–6–3/4, EN 55011
EMC standards, immunity	EN 61800–3, EN 61000–6–1/2, EN 61000–4–2, EN 61000–4–3, EN 61000–4–4, EN 61000–4–5, EN 61000–4–6

[1)] Only for ≤ 3.7 kW (200-240 and to 400-480 V), ≤ 7.5 kW (200-240 and to 400-480 V)

[2)] As enclosure kit for ≤ 3.7 kW (200-240 and to 400-480 V), ≤ 7.5 kW (200-240 and to 400-480 V)

Control card performance

Scan interval	1 ms

Control card, USB serial communication

USB standard	1.1 (full speed)
USB plug	USB type B "device" plug

Connection to PC is carried out via a standard host/device USB cable.

The USB connection is galvanically isolated from the supply voltage (PELV) and other high-voltage terminals.

The USB ground connection is not galvanically isolated from protection earth. Use only an isolated laptop as PC connection to the USB connector on the frequency converter.

Protection and features

- Electronic thermal motor protection against overload.
- Temperature monitoring of the heatsink ensures that the frequency converter trips if the temperature reaches a predefined level. An overload temperature cannot be reset until the temperature of the heatsink is below the values stated in the tables on the following pages (Guideline – these temperatures may vary for different power sizes, frame sizes, enclosure ratings, etc.)
- The frequency converter is protected against short-circuits on motor terminals U, V, W.
- If mains phase is missing, the frequency converter trips a warning (depending on the load).

- Monitoring of the intermediate circuit voltage ensures that the frequency converter trips if the intermediate circuit voltage is too low or too high.
- The frequency converter constantly checks for critical levels of internal temperature, load current, high voltage on the intermediate circuit and low motor speeds. As a response to a critical level, the frequency converter can adjust the switching frequency and/or change the switching pattern in order to ensure the performance of the frequency converter.

10.3 Fuses and circuit breakers

Use recommended fuses and/or circuit breakers on the supply side as protection in case of component breakdown inside the adjustable frequency drive (first fault).

NOTICE:

Use of fuses on the supply side is mandatory for IEC 60364 (CE) and NEC 2009 (UL) compliant installations.

Recommendations

- Fuses of the type gG
- Circuit breakers of Eaton types. For other circuit breaker types, ensure that the energy into the adjustable frequency drive is equal to or lower than the energy provided by Eaton types.

Use of recommended fuses and circuit breakers ensures possible damage to the adjustable frequency drive is limited to damages inside the unit.

The fuses below are suitable for use on a circuit capable of delivering 100,000 Arms (symmetrical), depending on the adjustable frequency drive voltage rating. With the proper fusing the adjustable frequency drive Short Circuit Current Rating (SCCR) is 100,000 Arms.

10.3.1 NEC (NFPA 70) compliance

Table 90: Mains supply 1x200–240 V AC - Single Phase

Power (hp [kW])	Maximum input current, continuous (at 1x200–240 V AC)	NEC fuse size
1.5 [1.1]	12.5	15
2 [1.5]	15	20
3 [2.2]	20.5	25
5 [3.7]	32	40
7.5 [5.5]	46	60
10 [7.5]	59	80
20 [15]	111	150
30 [22]	172	200

Table 91: Line power supply 3x200–240 V AC - Three Phase

Power (hp [kW])	Maximum input current, continuous (at 3x200–240 V AC)	NEC fuse size
1.5 [1.1]	5.9	10
2 [1.5]	6.8	10
3 [2.2]	9.5	15
5 [3.7]	15	20
7.5 [5.5]	22	30
10 [7.5]	28	35

Power (hp [kW])	Maximum input current, continuous (at 3x200–240 V AC)	NEC fuse size
15 [11]	42	60
20 [15]	54	80
25 [18.5]	68	90
30 [22]	80	100
40 [30]	104	150
50 [37]	130	175
60 [45]	154	200

Table 92: Line power supply 3x380–480 V AC - Three Phase

Power (hp [kW])	Maximum input current, continuous (at 3x441-480 V AC)	NEC fuse size
1.5 [1.1]	2.7	6
2 [1.5]	3.1	6
3 [2.2]	4.3	6
5 [4]	7.4	10
7.5 [5.5]	9.9	15
10 [7.5]	13	20
15 [11]	19	25
20 [15]	25	35
24 [18]	31	40
30 [22]	36	45
40 [30]	47	60
50 [37]	59	80
60 [45]	73	100
75 [55]	95	125
100 [75]	118	150
125 [90]	145	200

Table 93: Line power supply 3x525–600 V AC - Three Phase

Power (hp [kW])	Maximum input current, continuous (at 3x525-600 V AC)	NEC fuse size
1.5 [1.1]	2.4	6
2 [1.5]	2.7	6
3 [2.2]	4.1	6
5 [4]	5.8	10
7.5 [5.5]	8.6	10
10 [7.5]	10.4	15
15 [11]	17.2	25
20 [15]	20.9	30
24 [18]	25.4	35
30 [22]	32.7	40
40 [30]	39	50
50 [37]	49	80
60 [45]	59	80

Power (hp [kW])	Maximum input current, continuous (at 3x525-600 V AC)	NEC fuse size
75 [55]	78.9	100
100 [75]	95.3	125
125 [90]	124.3	175

10.3.2 CE compliance

Table 94: 200-240 V, Enclosure Types A, B, C

Enclosure type	Power (hp [kW])	Recommended fuse size	Recommended max. fuse size	Recommended circuit breaker (Eaton)	Max. trip level [A]
A2	1.5-3 [1.1-2.2]	gG-10 (1.5-2 [1.1-1.5]) gG-16 (3 [2.2])	gG-25	PKZM0-25	25
A3	4-5 [3.0-3.7]	gG-16 (4 [3]) gG-20 (5 [3.7])	gG-32	PKZM0-25	25
B3	7.5-15 [5.5-11]	gG-25 (7.5-10 [5.5-7.5]) gG-32 (15 [11])	gG-63	PKZM4-50	50
B4	20-24 [15-18]	gG-50 (20 [15]) gG-63 (25 [18])	gG-125	NZMB1-A100	100
C3	30-40 [22-30]	gG-80 (30 [22]) aR-125 (40 [30])	gG-150 (30 [22]) aR-160 (40 [30])	NZMB2-A200	150
C4	50-60 [37-45]	aR-160 (50 [37]) aR-200 (60 [45])	aR-200 (50 [37]) aR-250 (60 [45])	NZMB2-A250	250
A4	1.5-3 [1.1-2.2]	gG-10 (1.5-2 [1.1-1.5]) gG-16 (3 [2.2])	gG-32	PKZM0-25	25
A5	0.34-5 [0.25-3.7]	gG-10 (0.34-2 [0.25-1.5]) gG-16 (3-4 [2.2-3]) gG-20 (5 [3.7])	gG-32	PKZM0-25	25
B1	7.5-15 [5.5-11]	gG-25 (7.5 [5.5]) gG-32 (10-15 [7.5-11])	gG-80	PKZM4-63	63
B2	20 [15]	gG-50	gG-100	NZMB1-A100	100
C1	24-40 [18-30]	gG-63 (25 [18.5]) gG-80 (30 [22]) gG-100 (40 [30])	gG-160 (25-30 [18.5-22]) aR-160 (40 [30])	NZMB2-A200	160
C2	50-60 [37-45]	aR-160 (50 [37]) aR-200 (60 [45])	aR-200 (50 [37]) aR-250 (60 [45])	NZMB2-A250	250

Table 95: 380V-480V, Enclosure Types A, B and C

Enclosure type	Power (hp [kW])	Recommended fuse size	Recommended max. fuse size	Recommended circuit breaker (Eaton)	Max. trip level [A]
A2	1.5-5 [1.1-4.0]	gG-10 (1.5-4 [1.1-3]) gG-16 (5 [4])	gG-25	PKZM0-25	25
A3	7.5-10 [5.5-7.5]	gG-16	gG-32	PKZM0-25	25
B3	15-24 [11-18]	gG-40	gG-63	PKZM4-50	50

Enclosure type	Power (hp [kW])	Recommended fuse size	Recommended max. fuse size	Recommended circuit breaker (Eaton)	Max. trip level [A]
B4	30-50 [22-37]	gG-50 (30 [22]) gG-63 (40 [30]) gG-80 (50 [37])	gG-125	NZMB1-A100	100
C3	60-75 [45-55]	gG-100 (60 [45]) gG-160 (75 [55])	gG-150 (60 [45]) gG-160 (75 [55])	NZMB2-A200	150
C4	100-125 [75-90]	aR-200 (100 [75]) aR-250 (125 [90])	aR-250	NZMB2-A250	250
A4	1.5-5 [1.1-4]	gG-10 (1.5-4 [1.1-3]) gG-16 (5 [4])	gG-32	PKZM0-25	25
A5	1.5-10 [1.1-7.5]	gG-10 (1.5-4 [1.1-3]) gG-16 (5-10 [4-7.5])	gG-32	PKZM0-25	25
B1	15-25 [11-18.5]	gG-40	gG-80	PKZM4-63	63
B2	30-40 [22-30]	gG-50 (30 [22]) gG-63 (40 [30])	gG-100	NZMB1-A100	100
C1	50-75 [37-55]	gG-80 (50 [37]) gG-100 (60 [45]) gG-160 (75 [55])	gG-160	NZMB2-A200	160
C2	100-125 [75-90]	aR-200 (100 [75]) aR-250 (125 [90])	aR-250	NZMB2-A250	250

Table 96: 525-600 V, Enclosure Types A, B and C

Enclosure type	Power (hp [kW])	Recommended fuse size	Recommended max. fuse size	Recommended circuit breaker (Eaton)	Max. trip level [A]
A3	5.5 [7.5-10]	gG-10 (7.5 [5.5]) gG-16 (10 [7.5])	gG-32	PKZM0-25	25
B3	15-24 [11-18]	gG-25 (15 [11]) gG-32 (20-25 [15-18])	gG-63	PKZM4-50	50
B4	30-50 [22-37]	gG-40 (30 [22]) gG-50 (40 [30]) gG-63 (50 [37])	gG-125	NZMB1-A100	100
C3	60-75 [45-55]	gG-63 (60 [45]) gG-100 (75 [55])	gG-150	NZMB2-A200	150
C4	100-125 [75-90]	aR-160 (100 [75]) aR-200 (125 [90])	aR-250	NZMB2-A250	250
A5	1.5-10 [1.1-7.5]	gG-10 (1.5-7.5 [1.1-5.5]) gG-16 (10 [7.5])	gG-32	PKZM0-25	25
B1	15-24 [11-18]	gG-25 (15 [11]) gG-32 (20 [15]) gG-40 (25 [18.5])	gG-80	PKZM4-63	63
B2	30-40 [22-30]	gG-50 (30 [22]) gG-63 (40 [30])	gG-100	NZMB1-A100	100
C1	50-75 [37-55]	gG-63 (50 [37]) gG-100 (60 [45]) aR-160 (75 [55])	gG-160 (50-60 [37-45]) aR-250 (75 [55])	NZMB2-A200	160

Enclosure type	Power (hp [kW])	Recommended fuse size	Recommended max. fuse size	Recommended circuit breaker (Eaton)	Max. trip level [A]
C2	100-125 [75-90]	aR-200 (100-125 [75-90])	aR-250	NZMB2-A250	250

Table 97: 525-690 V, Enclosure Types A, B and C

Enclosure type	Power (hp [kW])	Recommended fuse size	Recommended max. fuse size	Recommended circuit breaker (Eaton)	Max. trip level [A]
A3	1.5 [1.1] 2 [1.5] 3 [2.2] 4 [3] 5 [4] 7.5 [5.5] 10 [7.5]	gG-6 gG-6 gG-6 gG-10 gG-10 gG-16 gG-16	gG-25 gG-25 gG-25 gG-25 gG-25 gG-25 gG-25	PKZM0-16	16
B2/B4	15 [11] 20 [15] 24 [18] 30 [22]	gG-25 (15 [11]) gG-32 (20 [15]) gG-32 (24 [18]) gG-40 (30 [22])	gG-63	-	-
B4/C2	40 [30]	gG-63 (40 [30])	gG-80 (40 [30])		
C2/C3	50 [37] 60 [45]	gG-63 (50 [37]) gG-80 (60 [45])	gG-100 (50 [37]) gG-125 (60 [45])	-	-
C2	75 [55] 100 [75]	gG-100 (75 [55]) gG-125 (100 [75])	gG-160 (75-100 [55-75])	-	-

10.3.3 UL compliance

Table 98: 1 x 200–240 V, Enclosure Types A, B, and C

Recommended maximum fuse													
Power (hp [kW])	Max. prefuse size [A]	Bussmann							SIBA	Littel-fuse	Ferraz-Shawmut		
		JFHR2	RK1	J	T	CC	CC	CC	RK1	RK1	CC	RK1	J
1.5 [1.1]	15	FWX-15	KTN-15	JKS-15	JJN-15	FNQ-R-15	KTK-R-15	LP-CC-15	501790 6–016	KLN-R15	ATM-R15	A2K-15 R	HSJ15
2 [1.5]	20	FWX-20	KTN-R20	JKS-20	JJN-20	FNQ-R-20	KTK-R-20	LP-CC-20	501790 6–020	KLN-R20	ATM-R20	A2K-20 R	HSJ20
3 [2.2]	30*	FWX-30	KTN-R30	JKS-30	JJN-30	FNQ-R-30	KTK-R-30	LP-CC-30	501240 6–032	KLN-R30	ATM-R30	A2K-30 R	HSJ30
5 [3.7]	50	FWX-50	KTN-R50	JKS-50	JJN-50				501400 6–050	KLN-R50	–	A2K-50 R	HSJ50
7.5 [5.5]	60**	FWX-60	KTN-R60	JKS-60	JJN-60				501400 6–050	KLN-R60	–	A2K-60 R	HSJ60
10 [7.5]	80	FWX-80	KTN-R80	JKS-80	JJN-80				501400 6–080	KLN-R80	–	A2K-80 R	HSJ80
20 [15]	150	FWX-15 0	KTN-R150	JKS-150	JJN-150				202822 0–150	KLN-R150		A2K-15 0R	HSJ150
30 [22]	200	FWX-20 0	KTN-R200	JKS-200	JJN-200				202822 0–200	KLN-R200		A2K-20 0R	HSJ200

* Siba allowed up to 32 A; ** Siba allowed up to 63A

Table 99: 3 x 200–240 V, Enclosure Types A, B, and C

Recommended maximum fuse						
Power (hp [kW])	Bussmann Type RK1[1.]	Bussmann Type J	Bussmann Type T	Bussmann Type CC	Bussmann Type CC	Bussmann Type CC
1.5 [1.1]	KTN-R-10	JKS-10	JJN-10	FNQ-R-10	KTK-R-10	LP-CC-10
2 [1.5]	KTN-R-15	JKS-15	JJN-15	FNQ-R-15	KTK-R-15	LP-CC-15
3 [2.2]	KTN-R-20	JKS-20	JJN-20	FNQ-R-20	KTK-R-20	LP-CC-20
5 [3.7]	KTN-R-30	JKS-30	JJN-30	FNQ-R-30	KTK-R-30	LP-CC-30
7.5-10 [5.5-7.5]	KTN-R-50	JKS-50	JJN-50	–	–	–
15 [11]	KTN-R-60	JKS-60	JJN-60	–	–	–
20 [15]	KTN-R-80	JKS-80	JJN-80	–	–	–
25-30 [18.5-22]	KTN-R-125	JKS-125	JJN-125	–	–	–
40 [30]	KTN-R-150	JKS-150	JJN-150	–	–	–
50 [37]	KTN-R-200	JKS-200	JJN-200	–	–	–
60 [45]	KTN-R-250	JKS-250	JJN-250	–	–	–

Table 100: 3 x 200–240 V, Enclosure Types A, B, and C

Recommended maximum fuse								
Power (hp [kW])	SIBA Type RK1	Littelfuse Type RK1	Ferraz-Shawmut Type CC	Ferraz-Shawmut Type RK1[3.]	Bussmann Type JFHR2[2.]	Littelfuse JFHR2	Ferraz-Shawmut JFHR2[4.]	Ferraz-Shawmut J
1.5 [1.1]	5017906–010	KLN-R-10	ATM-R-10	A2K-10–R	FWX-10	–	–	HSJ-10
2 [1.5]	5017906–016	KLN-R-15	ATM-R-15	A2K-15–R	FWX-15	–	–	HSJ-15
3 [2.2]	5017906–020	KLN-R-20	ATM-R-20	A2K-20–R	FWX-20	–	–	HSJ-20
5 [3.7]	5012406–032	KLN-R-30	ATM-R-30	A2K-30–R	FWX-30	–	–	HSJ-30
7.5-10 [5.5-7.5]	5014006–050	KLN-R-50	–	A2K-50–R	FWX-50	–	–	HSJ-50
15 [11]	5014006–063	KLN-R-60	–	A2K-60–R	FWX-60	–	–	HSJ-60
20 [15]	5014006–080	KLN-R-80	–	A2K-80–R	FWX-80	–	–	HSJ-80
25-30 [18.5-22]	2028220–125	KLN-R-125	–	A2K-125–R	FWX-125	–	–	HSJ-125
40 [30]	2028220–150	KLN-R-150	–	A2K-150–R	FWX-150	L25S-150	A25X-150	HSJ-150
50 [37]	2028220–200	KLN-R-200	–	A2K-200–R	FWX-200	L25S-200	A25X-200	HSJ-200
60 [45]	2028220–250	KLN-R-250	–	A2K-250–R	FWX-250	L25S-250	A25X-250	HSJ-250

1. KTS fuses from Bussmann may substitute KTN for 240 V adjustable frequency drives.
2. FWH fuses from Bussmann may substitute FWX for 240 V adjustable frequency drives.
3. A6KR fuses from FERRAZ SHAWMUT may substitute A2KR for 240 V adjustable frequency drives.
4. A50X fuses from FERRAZ SHAWMUT may substitute A25X for 240 V adjustable frequency drives.

Table 101: 3 x 380–480 V, Enclosure Types A, B, and C

Recommended maximum fuse						
Power (hp [kW])	Bussmann Type RK1	Bussmann Type J	Bussmann Type T	Bussmann Type CC	Bussmann Type CC	Bussmann Type CC
1.5 [1.1]	KTS-R-6	JKS-6	JJS-6	FNQ-R-6	KTK-R-6	LP-CC-6
2-3 [1.5-2.2]	KTS-R-10	JKS-10	JJS-10	FNQ-R-10	KTK-R-10	LP-CC-10

Recommended maximum fuse						
Power (hp [kW])	Bussmann Type RK1	Bussmann Type J	Bussmann Type T	Bussmann Type CC	Bussmann Type CC	Bussmann Type CC
5 [4]	KTS-R-20	JKS-20	JJS-20	FNQ-R-20	KTK-R-20	LP-CC-20
7.5 [5.5]	KTS-R-25	JKS-25	JJS-25	FNQ-R-25	KTK-R-25	LP-CC-25
10 [7.5]	KTS-R-30	JKS-30	JJS-30	FNQ-R-30	KTK-R-30	LP-CC-30
15-20 [11-15]	KTS-R-40	JKS-40	JJS-40	–	–	–
24 [18]	KTS-R-50	JKS-50	JJS-50	–	–	–
30 [22]	KTS-R-60	JKS-60	JJS-60	–	–	–
40 [30]	KTS-R-80	JKS-80	JJS-80	–	–	–
50 [37]	KTS-R-100	JKS-100	JJS-100	–	–	–
60 [45]	KTS-R-125	JKS-125	JJS-125	–	–	–
75 [55]	KTS-R-150	JKS-150	JJS-150	–	–	–
100 [75]	KTS-R-200	JKS-200	JJS-200	–	–	–
125 [90]	KTS-R-250	JKS-250	JJS-250	–	–	–

Table 102: 3 x 380–480 V, Enclosure Types A, B, and C

Recommended maximum fuse								
Power (hp [kW])	SIBA Type RK1	Littelfuse Type RK1	Ferraz-Shawmut Type CC	Ferraz-Shawmut Type RK1	Bussmann JFHR2	Ferraz-Shawmut J	Ferraz-Shawmut JFHR2[1.]	Littelfuse JFHR2
1.5 [1.1]	5017906–006	KLS-R-6	ATM-R-6	A6K-10–6	FWH-6	HSJ-6	–	–
2-3 [1.5-2.2]	5017906–010	KLS-R-10	ATM-R-10	A6K-10–R	FWH-10	HSJ-10	–	–
5 [4]	5017906–020	KLS-R-10	ATM-R-20	A6K-20–R	FWH-20	HSJ-20	–	–
7.5 [5.5]	5017906–025	KLS-R-25	ATM-R-25	A6K-25–R	FWH-25	HSJ-25	–	–
10 [7.5]	5012406–032	KLS-R-30	ATM-R-30	A6K-30–R	FWH-30	HSJ-30	–	–
15-20 [11-15]	5014006–040	KLS-R-40	–	A6K-40–R	FWH-40	HSJ-40	–	–
24 [18]	5014006–050	KLS-R-50	–	A6K-50–R	FWH-50	HSJ-50	–	–
30 [22]	5014006–063	KLS-R-60	–	A6K-60–R	FWH-60	HSJ-60	–	–
40 [30]	2028220–100	KLS-R-80	–	A6K-80–R	FWH-80	HSJ-80	–	–
50 [37]	2028220–125	KLS-R-100	–	A6K-100–R	FWH-100	HSJ-100	–	–
60 [45]	2028220–125	KLS-R-125	–	A6K-125–R	FWH-125	HSJ-125	–	–
75 [55]	2028220–160	KLS-R-150	–	A6K-150–R	FWH-150	HSJ-150	–	–
100 [75]	2028220–200	KLS-R-200	–	A6K-200–R	FWH-200	HSJ-200	A50–P-225	L50–S-225
125 [90]	2028220–250	KLS-R-250	–	A6K-250–R	FWH-250	HSJ-250	A50–P-250	L50–S-250

1. Ferraz-Shawmut A50QS may substitute A50P fuses.

Table 103: 3 x 525–600 V, Enclosure Types A, B, and C

Recommended maximum fuse										
Power (hp [kW])	Bussmann Type RK1	Bussmann Type J	Bussmann Type T	Bussmann Type CC	Bussmann Type CC	Bussmann Type CC	SIBA Type RK1	Littelfuse Type RK1	Ferraz-Shawmut Type RK1	Ferraz-Shawmut J
1.5 [1.1]	KTS-R-5	JKS-5	JJS-6	FNQ-R-5	KTK-R-5	LP-CC-5	5017906–005	KLS-R-005	A6K-5–R	HSJ-6
2-3 [1.5-2.2]	KTS-R-10	JKS-10	JJS-10	FNQ-R-10	KTK-R-10	LP-CC-10	5017906–010	KLS-R-010	A6K-10–R	HSJ-10

Recommended maximum fuse										
Power (hp [kW])	Bussmann Type RK1	Bussmann Type J	Bussmann Type T	Bussmann Type CC	Bussmann Type CC	Bussmann Type CC	SIBA Type RK1	Littelfuse Type RK1	Ferraz-Shawmut Type RK1	Ferraz-Shawmut J
5 [4]	KTS-R-20	JKS-20	JJS-20	FNQ-R-20	KTK-R-20	LP-CC-20	5017906–020	KLS-R-020	A6K-20–R	HSJ-20
7.5 [5.5]	KTS-R-25	JKS-25	JJS-25	FNQ-R-25	KTK-R-25	LP-CC-25	5017906–025	KLS-R-025	A6K-25–R	HSJ-25
10 [7.5]	KTS-R-30	JKS-30	JJS-30	FNQ-R-30	KTK-R-30	LP-CC-30	5017906–030	KLS-R-030	A6K-30–R	HSJ-30
15-20 [11-15]	KTS-R-35	JKS-35	JJS-35	–	–	–	5014006–040	KLS-R-035	A6K-35–R	HSJ-35
24 [18]	KTS-R-45	JKS-45	JJS-45	–	–	–	5014006–050	KLS-R-045	A6K-45–R	HSJ-45
30 [22]	KTS-R-50	JKS-50	JJS-50	–	–	–	5014006–050	KLS-R-050	A6K-50–R	HSJ-50
40 [30]	KTS-R-60	JKS-50	JJS-60	–	–	–	5014006–063	KLS-R-060	A6K-60–R	HSJ-60
50 [37]	KTS-R-80	JKS-80	JJS-80	–	–	–	5014006–080	KLS-R-075	A6K-80–R	HSJ-80
60 [45]	KTS-R-100	JKS-100	JJS-100	–	–	–	5014006–100	KLS-R-100	A6K-100–R	HSJ-100
75 [55]	KTS-R-125	JKS-125	JJS-125	–	–	–	2028220–125	KLS-125	A6K-125–R	HSJ-125
100 [75]	KTS-R-150	JKS-150	JJS-150	–	–	–	2028220–150	KLS-150	A6K-150–R	HSJ-150
125 [90]	KTS-R-175	JKS-175	JJS-175	–	–	–	2028220–200	KLS-175	A6K-175–R	HSJ-175

Table 104: 3 x 525-690 V, Enclosure Types A, B and C

Recommended maximum fuse						
Power (hp [kW])	Bussmann Type RK1	Bussmann Type J	Bussmann Type T	Bussmann Type CC	Bussmann Type CC	Bussmann Type CC
1.5 [1.1]	KTS-R-5	JKS-5	JJS-6	FNQ-R-5	KTK-R-5	LP-CC-5
2-3 [1.5-2.2]	KTS-R-10	JKS-10	JJS-10	FNQ-R-10	KTK-R-10	LP-CC10
4 [3]	KTS-R-15	JKS-15	JJS-15	FNQ-R-15	KTK-R-15	LP-CC-15
5 [4]	KTS-R-20	JKS-20	JJS-20	FNQ-R-20	KTK-R-20	LP-CC-20
7.5 [5.5]	KTS-R-25	JKS-25	JJS-25	FNQ-R-25	KTK-R-25	LP-CC-25
10 [7.5]	KTS-R-30	JKS-30	JJS-30	FNQ-R-30	KTK-R-30	LP-CC-30
15-20 [11-15]	KTS-R-35	JKS-35	JJS-35	–	–	–
24 [18]	KTS-R-45	JKS-45	JJS-45	–	–	–
30 [22]	KTS-R-50	JKS-50	JJS-50	–	–	–
40 [30]	KTS-R-60	JKS-60	JJS-60	–	–	–
50 [37]	KTS-R-80	JKS-80	JJS-80	–	–	–
60 [45]	KTS-R-100	JKS-100	JJS-100	–	–	–
75 [55]	KTS-R-125	JKS-125	JJS-125	–	–	–
100 [75]	KTS-R-150	JKS-150	JJS-150	–	–	–
125 [90]	KTS-R-175	JKS-175	JJS-175	–	–	–

Table 105: 3 x 525-690 V, Enclosure Types B and C

Recommended maximum fuse								
Power (hp [kW])	Maximum prefuse	Bussmann E52273 RK1/JDDZ	Bussmann E4273 J/JDDZ	Bussmann E4273 T/JDDZ	SIBA E180276 RK1/JDDZ	Littelfuse P81895 RK1/JDDZ	Ferraz-Shawmut E163267/ E2137 RK1/JDDZ	Ferraz-Shawmut E2137 J/HSJ
15-20 [11-15]	30 A	KTS-R-30	JKS-30	JKJS-30	5017906-030	KLS-R-030	A6K-30–R	HST-30
25 [18.5]	45 A	KTS-R-45	JKS-45	JKJS-45	5014006-050	KLS-R-045	A6K-45–R	HST-45
40 [30]	60 A	KTS-R-60	JKS-60	JKJS-60	5014006-063	KLS-R-060	A6K-60–R	HST-60
50 [37]	80 A	KTS-R-80	JKS-80	JKJS-80	5014006-080	KLS-R-075	A6K-80–R	HST-80
60 [45]	90 A	KTS-R-90	JKS-90	JKJS-90	5014006-100	KLS-R-090	A6K-90–R	HST-90
75 [55]	100 A	KTS-R-100	JKS-100	JKJS-100	5014006-100	KLS-R-100	A6K-100–R	HST-100
100 [75]	125 A	KTS-R-125	JKS-125	JKJS-125	202822-125	KLS-R-150	A6K-125–R	HST-125
125 [90]	150 A	KTS-R-150	JKS-150	JKJS-150	202822-150	KLS-R-175	A6K-150–R	HST-150

Non-UL compliance

If UL/cUL is not to be complied with, we recommend using the following fuses, which will ensure compliance with EN50178:

Table 106: Non-UL compliance, recommended line fuses

N110K–N315	380–500 V	type aR
N75K–N400	525–690 V	type aR

UL compliance

The fuses below are suitable for use on a circuit capable of delivering 100,000 Arms (symmetrical), depending on the drive voltage rating. With the proper fusing, the drive Short Circuit Current Rating (SCCR) is 100,000 Arms.

Table 107: Frame size D, line fuses, 380–480 V

Size/Type	Fuse options							
	Bussmann PN	Littelfuse PN	Littelfuse PN	Bussmann PN	SIBA PN	Ferraz-Shawmut PN	Ferraz-Shawmut PN (Europe)	Ferraz-Shawmut PN (North America)
N110	170M2619	LA50QS300-4	L50S-300	FWH-300A	20 610 31.315	A50QS300-4	6,9URD31D08 A0315	A070URD31KI 0315
N132	170M2620	LA50QS350-4	L50S-350	FWH-350A	20 610 31.350	A50QS350-4	6,9URD31D08 A0350	A070URD31KI 0350
N160	170M2621	LA50QS400-4	L50S-400	FWH-400A	20 610 31.400	A50QS400-4	6,9URD31D08 A0400	A070URD31KI 0400
N200	170M4015	LA50QS500-4	L50S-500	FWH-500A	20 610 31.550	A50QS500-4	6,9URD31D08 A0550	A070URD31KI 0550
N250	170M4016	LA50QS600-4	L50S-600	FWH-600A	20 610 31.630	A50QS600-4	6,9URD31D08 A0630	A070URD31KI 0630
N315	170M4017	LA50QS800-4	L50S-800	FWH-800A	20 610 31.800	A50QS800-4	6,9URD31D08 A0800	A070URD31KI 0800

* 170M fuses from Bussmann shown use the /80 visual indicator; TN/80 Type T, /110 or TN/110 Type T indicator fuses of the same size and amperage may be substituted for external use.

** Any minimum 500 V UL listed fuse with associated current rating may be used to meet UL requirements.

Table 108: Frame size D, 525–690 V

Size/Type	Fuse options			
	Bussmann PN	SIBA PN	Ferraz-Shawmut European PN	Ferraz-Shawmut North American PN
N110	170M2619	20 610 31.315	6,9URD31D08A0315	A070URD31KI0315
N132	170M2619	20 610 31.315	6,9URD31D08A0315	A070URD31KI0315
N200	170M4015	20 620 31.550	6,9URD32D08A0550	A070URD32KI0550
N250	170M4015	20 620 31.550	6,9URD32D08A0550	A070URD32KI0550
N315	170M4015	20 620 31.550	6,9URD32D08A0550	A070URD32KI0550
N400	170M4015	20 620 31.550	6,9URD32D08A0550	A070URD32KI0550

* 170M fuses from Bussmann shown use the /80 visual indicator; TN/80 Type T, /110 or TN/110 Type T indicator fuses of the same size and amperage may be substituted for external use.

Suitable for use on a circuit capable of delivering not more than 100,000 rms symmetrical amperes, 500/600/690 Volts maximum when protected by the above fuses.

Supplementary fuses

Table 109: SMPS fuse

Frame size	Bussmann PN*	Rating
D	KTK-4	4A, 600 V

Table 110: Fan fuses

Size/Type	Bussmann PN*	LittelFuse	Rating
P315, 380–480 V	KTK-4		4A, 600 V
P450, 525–690 V	KTK-4		4A, 600 V
P355-P450, 380–480 V		KLK-15	15A, 600 V

Line power disconnectors

Frame size	Power and voltage	Type
D1/D3	1500–1750 380–480 V & 1500–2000 525–690 V	ABB OETL-NF200A OR OT200U12–91
D2/D4	2000–3000 380–480 V AND 2500–5000 525–690 V	ABB OETL-NF400A OR OT400U12–91

NEC (NFPA 70) Compliance

Table 111: Line power supply 3 x 380–480 V AC – Three Phase

Size/Type	Power (hp [kW])	Continuous (at 3x380 V AC)			Continuous (at 3x480 V AC)		
		Maximum input current	125% of maximum input current	NEC Fuse Size	Maximum input current	125% of maximum input current	NEC Fuse Size
N110	150 [110]	204	255	300	183	228.75	250
N132	200 [132]	251	313.75	350	231	288.75	300
N160	250 [160]	304	380	400	291	363.75	400

Size/Type	Power (hp [kW])	Continuous (at 3x380 V AC)			Continuous (at 3x480 V AC)		
		Maximum input current	125% of maximum input current	NEC Fuse Size	Maximum input current	125% of maximum input current	NEC Fuse Size
N200	300 [200]	381	476.25	500	348	435	450
N250	350 [250]	463	578.75	600	427	533.75	600
N315	450 [315]	567	708.75	800	516	645	700
P355	500 [355]	634	792.5	800	569	711.25	800
P400	550 [400]	718	897.5	1000	653	816.25	1000
P450	600 [450]	771	963.75	1000	704	880	1000

Table 112: Line power supply 3 x 525–690 V AC – Three Phase

Size/Type	Power (hp [kW])	Continuous (at 3x550 V AC)			Continuous (at 3x575 V AC)			Continuous (at 3x690 V AC)		
		Maximum input current	125% of maximum input current	NEC Fuse Size	Maximum input current	125% of maximum input current	NEC Fuse Size	Maximum input current	125% of maximum input current	NEC Fuse Size
N110	125 [110]	130	162.5	175	124	155	175	128	160	175
N132	150 [132]	158	197.5	200	151	188.75	200	155	193.75	200
N160	200 [160]	198	247.5	250	189	236.25	250	197	246.25	250
N200	250 [200]	245	306.25	350	234	292.5	300	240	300	300
N250	300 [250]	289	361.25	400	289	361.25	400	347	433.75	450
N315	350 [315]	343	428.75	450	343	428.75	450	411	513.75	600
N400	400 [400]	398	497.5	500	398	497.5	500	478	597.5	600

10.4 Tightening torques

Table 113: Tightening torques for covers in Nm (in-lbs)

Frame	IP20 Open	IP21/Type 1	IP55/Type 3R/12	IP66/Type 4X
A3/A4/A5	–	–	2 (18)	2 (18)
B1/B2	–	*	2.2 (19)	2.2 (19)
C1/C2/C3/C4	–	*	2.2 (19)	2.2 (19)
* No screws to tighten – Does not exist				

Table 114: Tightening torques of terminals for frame sizes A2, A4, A5, B1-B4, C1-C4

	Power (hp [kW])			Torque Nm (in-lbs)						
Enclosure	208–230 V	380–460 V	575 V	525–600 V	Mains	Motor	DC connection	Brake	Earth	Relay
A2	1.5–3 [1.1-2.2]	1.5–5 [1.1-4]			1.8 (16)	1.8 (16)	1.8 (16)	1.8 (16)	3 (27)	0.6 (5.3)
A4	1.5–3 [1.1-2.2]	1.5–5 [1.1-4]			1.8 (16)	1.8 (16)	1.8 (16)	1.8 (16)	3 (27)	0.6 (5.3)
A5	1.5 [1.1]	1.5–10 [1.1 7.5]	1.5–10 [1.1-7.5]		1.8 (16)	1.8 (16)	1.8 (16)	1.8 (16)	3 (27)	0.6 (5.3)
B1	7.5–15 [5.5-11]	15–25 [11-18]	15–25 [11-18]		1.8 (16)	1.8 (16)	1.5 (13)	1.5 (13)	3 (27)	0.6 (5.3)
B2	20 [15]	30–40 [22-30]	30–40 [22-30]	15–40 [11-30]	4.5 (40)	4.5 (40)	3.7 (33)	3.7 (33)	3 (27)	0.6 (5.3)

	Power (hp [kW])			Torque Nm (in-lbs)						
Enclosure	208–230 V	380–460 V	575 V	525–600 V	Mains	Motor	DC connection	Brake	Earth	Relay
B3	7.5–15 [5.5-11]	15–25 [11-18]	15–25 [11-18]		1.8 (15.9)	1.8 (15.9)	1.8 (15.9)	1.8 (15.9)	3 (27)	0.6 (5.3)
B4	20–25 [15-18]	30–50 [22-37]	30–50 [22-37]	15–50 [11-37]	4.5 (40)	4.5 (40)	4.5 (40)	4.5 (40)	3 (27)	0.6 (5.3)
C1	25–40 [18-30]	50–75 [37-55]	50–75 [37-55]		10 (89)	10 (89)	10 (89)	10 (89)	3 (27)	0.6 (5.3)
C2	50–60 [37-45]	100–125 [75-90]	100–125 [75-90]	50–120 [37-90]	14 (124)/24 (212)[1)]	14 (124)/24 (212)[1)]	14 (124)	14 (124)	3 (27)	0.6 (5.3)
C3		60–75 [45-55]	60–75 [45-55]	60–70 [45-55]	10 (89)	10 (89)	10 (89)	10 (89)	3 (27)	0.6 (5.3)
C4	50–75 [37-55]	100–125 [75-90]	100–125 [75-90]		14/24[1)]	14/24[1)]	14 (124)	14 (124)	3 (27)	0.6 (5.3)
1) For different cable dimensions x/y, where x ≤ 0.14725 in^2 (95 mm^2) and y ≥ 0.14725 in^2 (95 mm^2).										

Table 115: Tightening torques of terminals for frame sizes D1-D4

Frame size	Terminal	Torque	Bolt size
D1, D2, D3 and D4	Line power motor	19 Nm (168 in-lbs)	M10
	Load sharing Brake	9.5 Nm (84 in-lbs)	M8

Apply the correct torque when tightening fasteners in the locations that are listed in the following table. Too low or too high torque when fastening an electrical connection results in a bad electrical connection. To ensure correct torque, use a torque wrench.

Table 116: Fastener torque ratings

Location	Bolt size	Torque [Nm (in-lb)]
Mains terminals	M10/M12	19 (168)/37 (335)
Motor terminals	M10/M12	19 (168)/37 (335)
Ground terminals	M8/M10	9.6 (84)/19.1 (169)
Brake terminals	M8	9.6 (84)
Load sharing terminals	M10/M12	19 (168)/37 (335)
Relay terminals	_	0.5 (4)
Door/panel cover	M5	2.3 (20)
Gland plate	M5	2.3 (20)
Heat sink access panel	M5	3.9 (35)
Serial communication cover	M5	2.3 (20)

10.5 Wire sizing charts

NOTE: For North America only.

WARNING:

All wiring must comply with local and national regulations regarding cross section and ambient temperature requirements.

10.5.1 VFD input wire sizing

Maximum Allowable Conductor Length (45˚C Ambient, 5% drop)																									
Line Power Supply	Controller Ratings			Conductor Size for 75˚C Rated Wire (Single-Insulated Conductor in Free Air. Lengths in Bold Require 90˚C Rated Wire)																					
	Frequency Converter	Power (hp [kW])	Input Current	14	12	10	8	6	4	3	2	1	1/0	2/0	3/0	4/0	250	300	350	400	500	600	750	1000
1x200-240V	1K1	1.5 [1.1]	12.5	166	264	421	667	1037	1654	2079	2626	3308												
	1K5	2 [1.5]	15	**138**	220	351	556	864	1378	1733	2188	2756	3479											
	2K2	3 [2.2]	20.5		**161**	257	407	633	1008	1268	1601	2017	2546	3212										
	3K7	5 [3.7]	32				260	405	646	812	1026	1292	1631	2058	2597	3272	3863							
	5K5	7.5 [5.5]	46					**282**	449	565	713	899	1135	1431	1807	2277	2688	3226	3771					
	7K5	10 [7.5]	59						**350**	440	556	701	885	1116	1409	1775	2095	2515	2940	3362				
	15K	20 [15]	111										**470**	593	749	943	1114	1337	1563	1787	2223	2680	3354	
	22K	30 [22]	172													**609**	**719**	863	1009	1153	1435	1730	2165	2870
3x200-240V	1K1	1.5 [1.1]	5.9	352	559	892	1412	2198	3504															
	1K5	2 [1.5]	6.8	305	485	774	1226	1907	3040	3822														
	2K2	3 [2.2]	9.5	218	347	554	877	1365	2176	2736	3455													
	3K7	5 [3.7]	15	**138**	220	351	556	864	1378	1733	2188	2756	3479											
	5K5	7.5 [5.5]	22			239	379	589	940	1181	1492	1879	2372	2993	3778									
	7K5	10 [7.5]	28				298	463	738	928	1172	1477	1864	2352	2969	3740								
	11K	15 [11]	42					309	492	619	781	984	1243	1568	1979	2493	2944	3534						
	15K	20 [15]	54						383	481	608	766	966	1219	1539	1939	2289	2748	3213	3673				
	18K	25 [18]	68							**382**	483	608	767	968	1222	1540	1818	2183	2551	2917	3629			
	22K	30 [22]	80								**410**	517	652	823	1039	1309	1545	1855	2169	2479	3085	3719		
	30K	40 [30]	104									**398**	**502**	633	799	1007	1189	1427	1668	1907	2373	2861	3580	
	37K	50 [37]	130											**506**	639	806	951	1142	1335	1526	1898	2289	2864	3797
	45K	60 [45]	154												**540**	**680**	803	964	1127	1288	1602	1932	2418	3205
3x380-480V	1K1	1.5 [1.1]	2.7	1536	2444	3898																		
	1K5	2 [1.5]	3.7	1121	1783	2844																		
	2K2	3 [2.2]	5	830	1320	2105	3333																	
	4K	5 [4]	9	461	733	1169	1852	2882																
	5K5	7.5 [5.5]	11.7	355	564	899	1425	2217	3534															
	7K5	10 [7.5]	14.4	**288**	458	731	1157	1801	2871	3609														
	11K	15 [11]	22			478	758	1179	1879	2363	2984	3759												
	15K	20 [15]	29				575	894	1426	1792	2263	2851	3599											
	18K	25 [18]	34				**490**	763	1216	1529	1931	2432	3070	3873										
	22K	30 [22]	40					648	1034	1299	1641	2067	2609	3292										
	30K	40 [30]	55						752	945	1193	1503	1898	2394	3023	3808								
	37K	50 [37]	66						**626**	**788**	995	1253	1581	1995	2519	3173	3746							
	45K	60 [45]	82								**800**	1008	1273	1606	2027	2554	3015	3620						
	55K	75 [55]	96									**861**	1087	1372	1732	2182	2576	3092	3614					
	75K	100 [75]	133											**990**	**1250**	1575	1859	2232	2609	2983	3711			
	90K	125 [90]	161													**1301**	1536	1844	2155	2464	3066	3696		

Figure 128: Input - Single-Insulated Conductor 1x200-240V, 3x200-240V, 3x380-480V - 1K1-90K

Maximum Allowable Conductor Length (45˚C Ambient, 5% drop)																									
Line Power Supply	Controller Ratings			Conductor Size for 75˚C Rated Wire (Single-Insulated Conductor in Free Air. Lengths in Bold Require 90˚C Rated Wire)																					
	Frequency Converter	Power (hp [kW])	Input Current	14	12	10	8	6	4	3	2	1	1/0	2/0	3/0	4/0	250	300	350	400	500	600	750	1000
3x525-600V	1K1	1.5 [1.1]	2.4	2160	3436																				
	1K5	2 [1.5]	2.7	1920	3055																				
	2K2	3 [2.2]	4.1	1265	2012	3209																			
	4K	5 [4]	5.8	894	1422	2268	3592																		
	5K5	7.5 [5.5]	8.6	603	959	1530	2423	3770																	
	7K5	10 [7.5]	10.4	499	793	1265	2003	3117																	
	11K	15 [11]	17.2	**301**	**479**	765	1211	1885	3005	3777															
	15K	20 [15]	20.9			629	997	1551	2473	3109	3926														
	18K	25 [18]	25.4			**518**	820	1276	2035	2558	3230														
	22K	30 [22]	32.7				637	991	1580	1987	2509	3161	3990												
	30K	40 [30]	39					831	1325	1666	2104	2650	3345												
	37K	50 [37]	49					**662**	1055	1326	1674	2109	2663	3359											
	45K	60 [45]	59						**876**	1101	1391	1752	2211	2790	3522										
	55K	75 [55]	78.9								**1040**	1310	1654	2086	2634	3318	3917								
	75K	100 [75]	95.3									**1085**	1369	1727	2180	2747	3243	3893							
	90K	125 [90]	124.3											**1324**	1672	2106	2487	2985	3489	3989					

Figure 129: Input - Single-Insulated Conductor 3x525-600V - 1K1-90K

Table 117: Input - Single-Insulated Conductor 3x380-480V and 3x525-600V - N110-N400

Maximum Allowable Conductor Length (45°C Ambient, 5% drop)																	
	Controller Ratings					Conductor Size for 75°C Rated Wire (Single-Insulated Conductor in Free Air) (Lengths in bold require 90°C rated wire)											
Line Power Supply	Frequency Converter	Power (hp [kW])	Input Current	Wires Per Phase	Maximum Wire Size	6	4	3	2	1	1/0	2/0	3/0	4/0	250	300	350
3x380–480V	N110	150 [110]	183	2	3/0		**452**	568	717	904	1141	1439	1817	2289	2702	3244	3792
	N132	200 [132]	231	2	3/0				**568**	716	904	1140	1439	1813	2141	2570	3004
	N160	250 [160]	291	2	3/0					**568**	717	905	1143	1439	1699	2040	2385
	N200	300 [200]	348	2	350						**600**	**757**	955	1204	1421	1706	1994
	N250	350 [250]	427	2	350								**779**	981	1158	1390	1625
	N315	450 [315]	516	4	350				**509**	**641**	809	1021	1289	1624	1917	2301	2690
3x525–600V	N110	125 [110]	124	2	3/0	523	834	1048	1323	1667	2104	2655	3352				
	N132	150 [132]	151	2	3/0		685	861	1087	1369	1728	2180	2752	3468			
	N160	200 [160]	189	2	3/0		**547**	688	868	1094	1381	1742	2199	2770	3271	3926	
	N200	250 [200]	234	2	350				**701**	883	1115	1407	1776	2238	2642	3171	3707
	N250	300 [250]	289	2	350					**715**	903	1139	1438	1812	2139	2568	3001
	N315	350 [315]	343	2	350						**761**	960	1212	1527	1802	2163	2529
	N400	400 [400]	398	2	350							**827**	1044	1316	1553	1864	2179

Table 118: Input - 3 Current Carrying Conductors in Cable 3x380-480V and 3x525-600V - N110-N400

Maximum Allowable Conductor Length (45°C Ambient, 5% drop)																
	Controller Ratings					Conductor Size for 75°C Rated Wire (3 Current Carrying Conductors in Cable, Raceway or Directly Buried) (Lengths in Bold Require 90°C Rated Wire)										
Line Power Supply	Frequency Converter	Power (hp [kW])	Input Current	Wires per Phase	Maximum Wire Size	4	3	2	1	1/0	2/0	3/0	4/0	250	300	350
3x380–480V	N110	150 [110]	183	2	3/0				**904**	1141	1439	1817	2289	2702	3244	3792
	N132	200 [132]	231	2	3/0					**904**	1140	1439	1813	2141	2570	3004
	N160	250 [160]	291	2	3/0							**1143**	1439	1699	2040	2385
	N200	300 [200]	348	2	350								**1204**	**1421**	1706	1994
	N250	350 [250]	427	2	350										**1390**	**1625**
	N315	450 [315]	516	4	350						**1021**	1289	1624	1917	2301	2690
3x525–600V	N110	125 [110]	124	2	3/0	**834**	1048	1323	1667	2104	2655	3352				
	N132	150 [132]	151	2	3/0		**861**	**1087**	1369	1728	2180	2752	3468			
	N160	200 [160]	189	2	3/0				**1094**	1381	1742	2199	2770	3271	3926	
	N200	250 [200]	234	2	350					**1115**	**1407**	1776	2238	2642	3171	3707
	N250	300 [250]	289	2	350							**1438**	1812	2139	2568	3001
	N315	350 [315]	343	2	350								**1527**	**1802**	2163	2529
	N400	400 [400]	398	2	350									**1553**	**1864**	2179

10.5.2 VFD output wire sizing

Maximum Allowable Conductor Length (45˚C Ambient, 5% drop)																									
Con-troller Input	Controller Ratings			Conductor Size for 75˚C Rated Wire (Single-Insulated Conductor in Free Air. Lengths in Bold Require 90˚C Rated Wire)																					
	Frequency Converter	Power (hp [kW])	Output Current	14	12	10	8	6	4	3	2	1	1/0	2/0	3/0	4/0	250	300	350	400	500	600	750	1000	
1x200-240V	1K1	1.5 [1.1]	6.6	166	264	421	667	1037	1654	2079	2626	3308												3451	
	1K5	2 [1.5]	7.5	277	440	702	1111	1729	2756	3465														2903	
	2K2	3 [2.2]	10.6	196	311	496	786	1223	1950	2452	3096	3900													
	3K7	5 [4]	16.7	**124**	**198**	315	499	776	1238	1556	1965	2476	3125	3943											
	5K5	7.5 [5.5]	24.2			**217**	344	536	854	1074	1356	1708	2157	2721	3435										
	7K5	10 [7.5]	30.8				271	421	671	844	1066	1342	1694	2138	2699	3400									
	15K	20 [15]	59.4						**348**	438	553	696	879	1108	1399	1763	2081	2499	2921	3339					
	22K	30 [22]	88								**373**	**470**	593	748	945	1190	1405	1687	1971	2254	2804	3381			
3x200-240V	1K1	1.5 [1.1]	6.6	314	500	797	1263	1965	3132	3938															
	1K5	2 [1.5]	7.5	277	440	702	1111	1729	2756	3465															
	2K2	3 [2.2]	10.6	196	311	496	786	1223	1950	2452	3096	3900													
	3K7	5 [4]	16.7	**124**	**198**	315	499	776	1238	1556	1965	2476	3125	3943											
	5K5	7.5 [5.5]	24.2			**217**	344	536	854	1074	1356	1708	2157	2721	3435										
	7K5	10 [7.5]	30.8				271	421	671	844	1066	1342	1694	2138	2699	3400									
	11K	15 [11]	46.2					**281**	447	563	710	895	1130	1425	1799	2267	2676	3212	3755						
	15K	20 [15]	59.4						**348**	438	553	696	879	1108	1399	1763	2081	2499	2921	3339					
	18K	25 [18]	74.8							**347**	439	553	698	880	1111	1400	1653	1984	2319	2652	3299	3978			
	22K	30 [22]	88								**373**	**470**	593	748	945	1190	1405	1687	1971	2254	2804	3381			
	30K	40 [30]	115										**454**	**573**	723	911	1075	1291	1509	1725	2146	2587	3238		
	37K	50 [37]	143												**581**	732	865	1038	1213	1387	1726	2081	2604		
	45K	60 [45]	170													**616**	**727**	873	1021	1167	1452	1750	2190		
3x380-480V	1K1	1.5 [1.1]	3	1383	2199	3508																			
	1K5	2 [1.5]	4.1	1012	1609	2567																			
	2K2	3 [2.2]	5.6	741	1178	1879	2976																		
	3K7	5 [4]	10	415	660	1052	1667	2593																	
	5K5	7.5 [5.5]	13	319	508	810	1282	1995	3180	3998															
	7K5	10 [7.5]	16	**259**	412	658	1042	1621	2584	3248															
	11K	15 [11]	24			**438**	694	1081	1723	2166	2735	3445													
	15K	20 [15]	32				521	810	1292	1624	2051	2584	3262												
	18K	25 [18]	37.5				**444**	692	1103	1386	1750	2205	2783	3512											
	22K	30 [22]	44					**589**	940	1181	1492	1879	2372	2993	3778										
	30K	40 [30]	61						**678**	852	1076	1356	1711	2159	2725	3433									
	37K	50 [37]	73							**712**	899	1133	1430	1804	2277	2869	3387								
	45K	60 [45]	90								**729**	**919**	1160	1463	1847	2327	2747	3298	3855						
	55K	75 [55]	106										**985**	1242	1568	1976	2333	2800	3273	3742					
	75K	100 [75]	147												**1131**	1425	1682	2019	2360	2699	3358				
	90K	125 [90]	177													**1183**	**1397**	1677	1960	2241	2788	3362			

Figure 130: Output - Single-Insulated Conductor 1x200-240V, 3x200-240V and 3x380-480V - 1K1-90K

Maximum Allowable Conductor Length (45˚C Ambient, 5% drop)																									
Con-troller Input	Controller Ratings			Conductor Size for 75˚C Rated Wire (Single-Insulated Conductor in Free Air. Lengths in Bold Require 90˚C Rated Wire)																					
	Frequency Converter	Power (hp [kW])	Output Current	14	12	10	8	6	4	3	2	1	1/0	2/0	3/0	4/0	250	300	350	400	500	600	750	1000	
3x525-600V	1K1	1.5 [1.1]	2.6	1994	3172																				
	1K5	2 [1.5]	2.9	1788	2844																				
	2K2	3 [2.2]	4.1	1265	2012	3209																			
	4K	5 [4]	6.4	810	1289	2055	3255																		
	5K5	7.5 [5.5]	9.5	546	868	1385	2193	3412																	
	7K5	10 [7.5]	11.5	451	717	1144	1812	2819																	
	11K	15 [11]	19		**434**	692	1097	1706	2720	3419															
	15K	20 [15]	23			**572**	906	1409	2247	2825	3567														
	18K	25 [18]	28				744	1158	1846	2320	2930	3691													
	22K	30 [22]	36				**579**	901	1436	1805	2279	2871	3624												
	30K	40 [30]	43					**754**	1202	1511	1908	2404	3034	3828											
	37K	50 [37]	54						957	1203	1519	1914	2416	3048	3848										
	45K	60 [45]	65						**795**	1000	1262	1590	2007	2532	3197										
	55K	75 [55]	87								**943**	**1188**	1500	1892	2388	3009	3553								
	75K	100 [75]	105										**1243**	1568	1979	2493	2944	3534							
	90K	125 [90]	137												**1517**	1911	2256	2708	3166	3619					

Figure 131: Output - Single-Insulated Conductor 3x525-600 - 1K1-90K

Table 119: Output - Single-Insulated Conductor 3x380-480V and 3x525-600V - N110-N400

Maximum Allowable Conductor Length (45°C Ambient, 5% drop)																	
	Controller Ratings					Conductor Size for 75°C Rated Wire (Single-Insulated Conductor in Free Air) (Lengths in Bold Require 90°C Rated Wire)											
Line Power Supply	Frequency Converter	Power (hp [kW])	Output Current	Wires Per Phase	Maximum Wire Size	6	4	3	2	1	1/0	2/0	3/0	4/0	250	300	350
3x380–480V	N110	150 [110]	190	2	3/0		**435**	547	691	870	1099	1386	1750	2205	2603	3125	3652
	N132	200 [132]	240	2	3/0				**547**	689	870	1097	1385	1745	2061	2474	2891
	N160	250 [160]	302	2	3/0					**548**	**691**	872	1101	1387	1637	1966	2298
	N200	300 [200]	361	2	350						**578**	**730**	921	1160	1370	1644	1922
	N250	350 [250]	443	2	350								**751**	946	1116	1340	1566
	N315	400 [315]	535	4	350					**618**	780	985	1243	1566	1849	2219	2594
3x525–600V	N110	125 [110]	131	2	3/0	**495**	789	992	1253	1578	1992	2513	3173	3997			
	N132	150 [132]	155	2	3/0		667	838	1059	1334	1683	2124	2681	3378	3988		
	N160	200 [160]	192	2	3/0		**538**	**677**	855	1077	1359	1715	2165	2727	3220	3865	
	N200	250 [200]	242	2	350				**678**	854	1078	1360	1717	2164	2554	3066	3584
	N250	300 [250]	290	2	350					**713**	900	1135	1433	1806	2132	2559	2991
	N315	350 [315]	344	2	350						**759**	957	1208	1522	1797	2157	2522
	N400	400 [400]	400	2	350							**823**	1039	1309	1545	1855	2169

Table 120: Output - 3 Current Carrying Conductors in Cable 3x380-480V and 3x525-600V - N110-N400

Maximum Allowable Conductor Length (45°C Ambient, 5% drop)																
	Controller Ratings					Conductor Size for 75°C Rated Wire (3 Current Carrying Conductors in Cable, Raceway or Directly Buried) (Lengths in Bold Require 90°C Rated Wire)										
Line Power Supply	Frequency Converter	Power (hp [kW])	Output Current	Wires Per Phase	Maximum Wire Size	4	3	2	1	1/0	2/0	3/0	4/0	250	300	350
3x380–480V	N110	150 [110]	190	2	3/0				**870**	1099	1386	1750	2205	2603	3125	3652
	N132	200 [132]	240	2	3/0						**1097**	1385	1745	2061	2474	2891
	N160	250 [160]	302	2	3/0							**1101**	**1387**	1637	1966	2298
	N200	300 [200]	361	2	350								**1160**	**1370**	1644	1922
	N250	350 [250]	443	2	350										**1340**	**1566**
	N315	450 [315]	535	4	350						**985**	**1243**	1566	1849	2219	2594
3x525–600V	N110	125 [110]	131	2	3/0	**789**	992	1253	1578	1992	2513	3173	3997			
	N132	150 [132]	155	2	3/0			**1059**	1334	1683	2124	2681	3378	3988		
	N160	200 [160]	192	2	3/0				**1077**	1359	1715	2165	2727	3220	3865	
	N200	250 [200]	242	2	350						**1360**	1717	2164	2554	3066	3584
	N250	300 [250]	290	2	350							**1433**	1806	2132	2559	2991
	N315	350 [315]	344	2	350								**1522**	**1797**	2157	2522
	N400	400 [400]	400	2	350									**1545**	**1855**	2169

NOTE: When ungrounded conductors are run in parallel, the size of the grounded conductor must be adjusted according to NEC 250.122.

NOTE: The preceding tables show the maximum recommended cable lengths for each model, which is calculated based upon NEC recommended values and may be taken as a reference.

10.6 Parameter list

0- Operation / Display**
0-0* Basic Settings
0-01 Language
0-02 Motor Speed Unit
0-03 Regional Settings
0-04 Operating State at Power-up
0-05 Local Mode Unit
0-1* Set-up Operations
0-10 Active Set-up
0-11 Programming Set-up
0-12 This Set-up Linked to
0-13 Readout: Linked Set-ups
0-14 Readout: Prog. Set-ups / Channel
0-15 Readout: actual setup
0-2* LCP Display
0-20 Display Line 1.1 Small
0-21 Display Line 1.2 Small
0-22 Display Line 1.3 Small
0-23 Display Line 2 Large
0-24 Display Line 3 Large
0-25 My Personal Menu
0-27 Display Mode
0-28 LCP Step Size
0-29 LCP Ramp
0-3* LCP Custom Readout
0-30 Custom Readout Unit
0-31 Custom Readout Min Value
0-32 Custom Readout Max Value
0-37 Display Text 1
0-38 Display Text 2
0-39 Display Text 3
0-4* LCP Keypad
0-40 [Hand on] Key on LCP
0-41 [Off] Key on LCP
0-42 [Auto on] Key on LCP
0-43 [Reset] Key on LCP
0-44 [Off/Reset] Key on LCP
0-45 [Drive Bypass] Key on LCP
0-5* Copy/Save
0-50 LCP Copy
0-51 Set-up Copy
0-6* Password
0-60 Main Menu Password
0-61 Access to Main Menu w/o Password
0-65 Personal Menu Password
0-66 Access to Personal Menu w/o Password
0-67 Bus Access Password
0-7* Clock Settings
0-70 Date and Time
0-71 Date Format
0-72 Time Format
0-74 DST/Summertime
0-76 DST/Summertime Start
0-77 DST/Summertime End
0-79 Clock Fault
0-81 Working Days
0-82 Additional Working Days
0-83 Additional Non-Working Days
0-89 Date and Time Readout

1- Load and Motor**
1-0* General Settings
1-00 Configuration Mode
1-03 Torque Characteristics
1-06 Clockwise Direction
1-1* Motor Selection
1-10 Motor Construction
1-1* VVC+ PM
1-14 Damping Gain
1-15 Low Speed Filter Time Const.
1-16 High Speed Filter Time Const.
1-17 Voltage filter time const.
1-2* Motor Data
1-20 Motor Power [kW]
1-21 Motor Power [HP]
1-22 Motor Voltage
1-23 Motor Frequency
1-24 Motor Current
1-25 Motor Nominal Speed
1-26 Motor Cont. Rated Torque
1-28 Motor Rotation Check
1-29 Automatic Motor Adaptation (AMA)
1-3* Adv. Motor Data
1-30 Stator Resistance (Rs)
1-31 Rotor Resistance (Rr)
1-35 Main Reactance (Xh)
1-36 Iron Loss Resistance (Rfe)
1-37 d-axis Inductance (Ld)
1-39 Motor Poles
1-40 Back EMF at 1000 RPM
1-46 Position Detection Gain
1-5* Load Indep. Setting
1-50 Motor Magnetisation at Zero Speed
1-51 Min Speed Normal Magnetising [RPM]
1-52 Min Speed Normal Magnetising [Hz]
1-58 Flystart Test Pulses Current
1-59 Flystart Test Pulses Frequency
1-6* Load Depen. Setting
1-60 Low Speed Load Compensation
1-61 High Speed Load Compensation
1-62 Slip Compensation
1-63 Slip Compensation Time Constant
1-64 Resonance Dampening
1-65 Resonance Dampening Time Constant
1-66 Min. Current at Low Speed
1-7* Start Adjustments
1-70 PM Start Mode
1-71 Start Delay
1-72 Start Function
1-73 Flying Start
1-77 Compressor Start Max Speed [RPM]
1-78 Compressor Start Max Speed [Hz]
1-79 Compressor Start Max Time to Trip
1-8* Stop Adjustments
1-80 Function at Stop
1-81 Min Speed for Function at Stop [RPM]
1-82 Min Speed for Function at Stop [Hz]
1-86 Trip Speed Low [RPM]
1-87 Trip Speed Low [Hz]

1-9* Motor Temperature
1-90 Motor Thermal Protection
1-91 Motor External Fan
1-93 Thermistor Source
1-94 ATEX ETR cur.lim. speed reduction
1-98 ATEX ETR interpol. points freq.
1-99 ATEX ETR interpol points current
2- Brakes**
2-0* DC-Brake
2-00 DC Hold/Preheat Current
2-01 DC Brake Current
2-02 DC Braking Time
2-03 DC Brake Cut In Speed [RPM]
2-04 DC Brake Cut In Speed [Hz]
2-06 Parking Current
2-07 Parking Time
2-1* Brake Energy Funct.
2-10 Brake Function
2-11 Brake Resistor (ohm)
2-12 Brake Power Limit (kW)
2-13 Brake Power Monitoring
2-15 Brake Check
2-16 AC brake Max. Current
2-17 Over-voltage Control
3- Reference / Ramps**
3-0* Reference Limits
3-02 Minimum Reference
3-03 Maximum Reference
3-04 Reference Function
3-1* References
3-10 Preset Reference
3-11 Jog Speed [Hz]
3-13 Reference Site
3-14 Preset Relative Reference
3-15 Reference 1 Source
3-16 Reference 2 Source
3-17 Reference 3 Source
3-19 Jog Speed [RPM]
3-4* Ramp 1
3-41 Ramp 1 Ramp Up Time
3-42 Ramp 1 Ramp Down Time
3-5* Ramp 2
3-51 Ramp 2 Ramp Up Time
3-52 Ramp 2 Ramp Down Time
3-8* Other Ramps
3-80 Jog Ramp Time
3-81 Quick Stop Ramp Time
3-82 Starting Ramp Up Time
3-9* Digital Pot.Meter
3-90 Step Size
3-91 Ramp Time
3-92 Power Restore
3-93 Maximum Limit
3-94 Minimum Limit
3-95 Ramp Delay
4- Limits / Warnings**
4-1* Motor Limits
4-10 Motor Speed Direction
4-11 Motor Speed Low Limit [RPM]

4-12 Sleep Frequency/Low Limit [Hz]
4-13 Motor Speed High Limit [RPM]
4-14 Motor Speed High Limit [Hz]
4-16 Torque Limit Motor Mode
4-17 Torque Limit Generator Mode
4-18 Current Limit
4-19 Max Output Frequency
4-5* Adj. Warnings
4-50 Warning Current Low
4-51 Warning Current High
4-52 Warning Speed Low
4-53 Warning Speed High
4-54 Warning Reference Low
4-55 Warning Reference High
4-56 Warning Feedback Low
4-57 Warning Feedback High
4-58 Missing Motor Phase Function
4-59 Motor Check At Start
4-6* Speed Bypass
4-60 Bypass Speed From [RPM]
4-61 Bypass Speed From [Hz]
4-62 Bypass Speed To [RPM]
4-63 Bypass Speed To [Hz]
4-64 Semi-Auto Bypass Set-up
5- Digital In/Out**
5-0* Digital I/O mode
5-00 Digital I/O Mode
5-01 Terminal 27 Mode
5-02 Terminal 29 Mode
5-1* Digital Inputs
5-10 Terminal 18 Digital Input
5-11 Terminal 19 Digital Input
5-12 Terminal 27 Digital Input
5-13 Terminal 29 Digital Input
5-14 Terminal 32 Digital Input
5-15 Terminal 33 Digital Input
5-16 Terminal X30/2 Digital Input
5-17 Terminal X30/3 Digital Input
5-18 Terminal X30/4 Digital Input
5-19 Terminal 37 Safe Stop
5-3* Digital Outputs
5-30 Terminal 27 Digital Output
5-31 Terminal 29 Digital Output
5-32 Term X30/6 Digi Out (MCB 101)
5-33 Term X30/7 Digi Out (MCB 101)
5-4* Relays
5-40 Function Relay
5-41 On Delay, Relay
5-42 Off Delay, Relay
5-5* Pulse Input
5-50 Term. 29 Low Frequency
5-51 Term. 29 High Frequency
5-52 Term. 29 Low Ref./Feedb. Value
5-53 Term. 29 High Ref./Feedb. Value
5-54 Pulse Filter Time Constant #29
5-55 Term. 33 Low Frequency
5-56 Term. 33 High Frequency
5-57 Term. 33 Low Ref./Feedb. Value
5-58 Term. 33 High Ref./Feedb. Value

5-59 Pulse Filter Time Constant #33
5-6* Pulse Output
5-60 Terminal 27 Pulse Output Variable
5-62 Pulse Output Max Freq #27
5-63 Terminal 29 Pulse Output Variable
5-65 Pulse Output Max Freq #29
5-66 Terminal X30/6 Pulse Output Variable
5-68 Pulse Output Max Freq #X30/6
5-8* I/O Options
5-80 AHF Cap Reconnect Delay
5-9* Bus Controlled
5-90 Digital & Relay Bus Control
5-93 Pulse Out #27 Bus Control
5-94 Pulse Out #27 Timeout Preset
5-95 Pulse Out #29 Bus Control
5-96 Pulse Out #29 Timeout Preset
5-97 Pulse Out #X30/6 Bus Control
5-98 Pulse Out #X30/6 Timeout Preset
6- Analog In/Out**
6-0* Analog I/O Mode
6-00 Sensor Fault Timeout Time (North America)
6-00 Live Zero Timeout Time (International)
6-01 Sensor Fault Timeout Function (North America)
6-01 Live Zero Timeout Function (International)
6-02 Fire Mode Sensor Fault Timeout Function (North America)
6-02 Fire Mode Live Zero Timeout Function (International)
6-1* Analog Input 53
6-10 Terminal 53 Low Voltage
6-11 Terminal 53 High Voltage
6-12 Terminal 53 Low Current
6-13 Terminal 53 High Current
6-14 Terminal 53 Low Ref./Feedb. Value
6-15 Terminal 53 High Ref./Feedb. Value
6-16 Terminal 53 Filter Time Constant
6-17 Terminal 53 Sensor Fault (North America)
6-17 Terminal 53 Live Zero (International)
6-2* Analog Input 54
6-20 Terminal 54 Low Voltage
6-21 Terminal 54 High Voltage
6-22 Terminal 54 Low Current
6-23 Terminal 54 High Current
6-24 Terminal 54 Low Ref./Feedb. Value
6-25 Terminal 54 High Ref./Feedb. Value
6-26 Terminal 54 Filter Time Constant
6-27 Terminal 54 Sensor Fault (North America)
6-27 Terminal 54 Live Zero (International)
6-3* Analog Input X30/11
6-30 Terminal X30/11 Low Voltage
6-31 Terminal X30/11 High Voltage
6-34 Term. X30/11 Low Ref./Feedb. Value
6-35 Term. X30/11 High Ref./Feedb. Value
6-36 Term. X30/11 Filter Time Constant
6-37 Term. X30/11 Sensor Fault
6-4* Analog Input X30/12
6-40 Terminal X30/12 Low Voltage

6-41 Terminal X30/12 High Voltage
6-44 Term. X30/12 Low Ref./Feedb. Value
6-45 Term. X30/12 High Ref./Feedb. Value
6-46 Term. X30/12 Filter Time Constant
6-47 Term. X30/12 Sensor Fault
6-5* Analog Output 42
6-50 Terminal 42 Output
6-51 Terminal 42 Output Min Scale
6-52 Terminal 42 Output Max Scale
6-53 Terminal 42 Output Bus Control
6-54 Terminal 42 Output Timeout Preset
6-55 Analog Output Filter
6-6* Analog Output X30/8
6-60 Terminal X30/8 Output
6-61 Terminal X30/8 Min. Scale
6-62 Terminal X30/8 Max. Scale
6-63 Terminal X30/8 Output Bus Control
6-64 Terminal X30/8 Output Timeout Preset
8- Comm. and Options**
8-0* General Settings
8-01 Control Site
8-02 Control Source
8-03 Control Timeout Time
8-04 Control Timeout Function
8-05 End-of-Timeout Function
8-06 Reset Control Timeout
8-07 Diagnosis Trigger
8-08 Readout Filtering
8-09 Communication Charset
8-1* Control Settings
8-10 Control Profile
8-13 Configurable Status Word STW
8-3* FC Port Settings
8-30 Protocol
8-31 Address
8-32 Baud Rate
8-33 Parity / Stop Bits
8-34 Estimated cycle time
8-35 Minimum Response Delay
8-36 Maximum Response Delay
8-37 Maximum Inter-Char Delay
8-4* FC MC protocol set
8-40 Telegram Selection
8-42 PCD Write Configuration
8-43 PCD Read Configuration
8-5* Digital/Bus
8-50 Coasting Select
8-52 DC Brake Select
8-53 Start Select
8-54 Reversing Select
8-55 Set-up Select
8-56 Preset Reference Select
8-7* BACnet
8-70 BACnet Device Instance
8-72 MS/TP Max Masters
8-73 MS/TP Max Info Frames
8-74 "I-Am" Service
8-75 Initialisation Password
8-8* FC Port Diagnostics
8-80 Bus Message Count
8-81 Bus Error Count
8-82 Slave Messages Rcvd
8-83 Slave Error Count
8-84 Slave Messages Sent
8-85 Slave Timeout Errors
8-89 Diagnostics Count
8-9* Bus Jog / Feedback
8-90 Bus Jog 1 Speed
8-91 Bus Jog 2 Speed
8-94 Bus Feedback 1
8-95 Bus Feedback 2
8-96 Bus Feedback 3
9- Profibus**
9-00 Setpoint
9-07 Actual Value
9-15 PCD Write Configuration
9-16 PCD Read Configuration
9-18 Node Address
9-22 Telegram Selection
9-23 Parameters for Signals
9-27 Parameter Edit
9-28 Process Control
9-44 Fault Message Counter
9-45 Fault Code
9-47 Fault Number
9-52 Fault Situation Counter
9-53 Profibus Warning Word
9-63 Actual Baud Rate
9-64 Device Identification
9-65 Profile Number
9-67 Control Word 1
9-68 Status Word 1
9-71 Profibus Save Data Values
9-72 ProfibusDriveReset
9-75 DO Identification
9-80 Defined Parameters (1)
9-81 Defined Parameters (2)
9-82 Defined Parameters (3)
9-83 Defined Parameters (4)
9-84 Defined Parameters (5)
9-90 Changed Parameters (1)
9-91 Changed Parameters (2)
9-92 Changed Parameters (3)
9-93 Changed Parameters (4)
9-94 Changed Parameters (5)
9-99 Profibus Revision Counter
11- LonWorks**
11-0* LonWorks ID
11-00 Neuron ID
11-1* LON Functions
11-10 Drive Profile
11-15 LON Warning Word
11-17 XIF Revision
11-18 LonWorks Revision
11-2* LON Param. Access
11-21 Store Data Values
12- Ethernet**
12-0* IP Settings
12-00 IP Address Assignment
12-01 IP Address
12-02 Subnet Mask
12-03 Default Gateway
12-04 DHCP Server
12-05 Lease Expires
12-06 Name Servers
12-07 Domain Name
12-08 Host Name
12-09 Physical Address
12-1* Ethernet Link Parameters
12-10 Link Status
12-11 Link Duration
12-12 Auto Negotiation
12-13 Link Speed
12-14 Link Duplex
12-2* Process Data
12-20 Control Instance
12-21 Process Data Config Write
12-22 Process Data Config Read
12-27 Primary Master
12-28 Store Data Values
12-29 Store Always
12-3* EtherNet/IP
12-30 Warning Parameter
12-31 Net Reference
12-32 Net Control
12-33 CIP Revision
12-34 CIP Product Code
12-35 EDS Parameter
12-37 COS Inhibit Timer
12-38 COS Filter
12-4* Modbus TCP
12-40 Status Parameter
12-41 Slave Message Count
12-42 Slave Exception Message Count
12-8* Other Ethernet Services
12-80 FTP Server
12-81 HTTP Server
12-82 SMTP Service
12-89 Transparent Socket Channel Port
12-9* Advanced Ethernet Services
12-90 Cable Diagnostic
12-91 Auto Cross Over
12-92 IGMP Snooping
12-93 Cable Error Length
12-94 Broadcast Storm Protection
12-95 Broadcast Storm Filter
12-96 Port Config
12-98 Interface Counters
12-99 Media Counters
13- Smart Logic**
13-0* SLC Settings
13-00 SL Controller Mode
13-01 Start Event
13-02 Stop Event
13-03 Reset SLC
13-1* Comparators
13-10 Comparator Operand
13-11 Comparator Operator
13-12 Comparator Value
13-2* Timers
13-20 SL Controller Timer
13-4* Logic Rules
13-40 Logic Rule Boolean 1
13-41 Logic Rule Operator 1
13-42 Logic Rule Boolean 2
13-43 Logic Rule Operator 2
13-44 Logic Rule Boolean 3
13-5* States
13-51 SL Controller Event
13-52 SL Controller Action
13-9* User Defined Alerts
13-90 Alert Trigger
13-91 Alert Action
13-92 Alert Text
13-9* User Defined Readouts
13-97 Alert Alarm Word
13-98 Alert Warning Word
13-99 Alert Status Word
14- Special Functions**
14-0* Inverter Switching
14-00 Switching Pattern
14-01 Switching Frequency
14-03 Overmodulation
14-04 PWM Random
14-1* Mains On/Off
14-10 Mains Failure
14-11 Mains Voltage at Mains Fault
14-12 Function at Mains Imbalance
14-16 Kin. Backup Gain
14-2* Reset Functions
14-20 Reset Mode
14-21 Automatic Restart Time
14-22 Operation Mode
14-23 Typecode Setting
14-25 Trip Delay at Torque Limit
14-26 Trip Delay at Inverter Fault
14-28 Production Settings
14-29 Service Code
14-3* Current Limit Ctrl.
14-30 Current Lim Ctrl, Proportional Gain
14-31 Current Lim Ctrl, Integration Time
14-32 Current Lim Ctrl, Filter Time
14-4* Energy Optimising
14-40 VT Level
14-41 AEO Minimum Magnetisation
14-42 Minimum AEO Frequency
14-43 Motor Cosphi
14-5* Environment
14-50 RFI Filter
14-51 DC Link Compensation
14-52 Fan Control
14-53 Fan Monitor
14-55 Output Filter
14-59 Actual Number of Inverter Units
14-6* Auto Derate
14-60 Function at Over Temperature
14-61 Function at Inverter Overload
14-62 Inv. Overload Derate Current
14-8* Options
14-89 Option Detection
14-9* Fault Settings
14-90 Fault Level
15- Drive Information**
15-0* Operating Data
15-00 Operating hours
15-01 Running Hours
15-02 kWh Counter
15-03 Power Up's
15-04 Over Temp's
15-05 Over Volt's
15-06 Reset kWh Counter
15-07 Reset Running Hours Counter
15-08 Number of Starts
15-1* Data Log Settings
15-10 Logging Source
15-11 Logging Interval
15-12 Trigger Event
15-13 Logging Mode
15-14 Samples Before Trigger
15-2* Historic Log
15-20 Historic Log: Event
15-21 Historic Log: Value
15-22 Historic Log: Time
15-23 Historic log: Date and Time
15-3* Alarm Log
15-30 Alarm Log: Error Code
15-31 Alarm Log: Value
15-32 Alarm Log: Time
15-33 Alarm Log: Date and Time
15-4* Drive Identification
15-40 FC Type
15-41 Power Section
15-42 Voltage
15-43 Software Version
15-44 Ordered Typecode String
15-45 Actual Typecode String
15-46 Frequency Converter Ordering No
15-47 Power Card Ordering No
15-48 LCP Id No
15-49 SW ID Control Card
15-50 SW ID Power Card
15-51 Frequency Converter Serial Number
15-53 Power Card Serial Number
15-55 Vendor URL
15-56 Vendor Name
15-59 CSIV Filename
15-6* Option Ident
15-60 Option Mounted
15-61 Option SW Version
15-62 Option Ordering No
15-63 Option Serial No
15-70 Option in Slot A
15-71 Slot A Option SW Version
15-72 Option in Slot B
15-73 Slot B Option SW Version

15-8* Operating Data II
15-80 Fan Running Hours
15-81 Preset Fan Running Hours
15-9* Parameter Info
15-92 Defined Parameters
15-93 Modified Parameters
15-98 Drive Identification
15-99 Parameter Metadata
16- Data Readouts**
16-0* General Status
16-00 Control Word
16-01 Reference [Unit]
16-02 Reference [%]
16-03 Status Word
16-05 Main Actual Value [%]
16-09 Custom Readout
16-1* Motor Status
16-10 Power [kW]
16-11 Power [hp]
16-12 Motor Voltage
16-13 Frequency
16-14 Motor current
16-15 Frequency [%]
16-16 Torque [Nm]
16-17 Speed [RPM]
16-18 Motor Thermal
16-20 Motor Angle
16-22 Torque [%]
16-23 Motor Shaft Power [kW]
16-24 Calibrated Stator Resistance
16-26 Power Filtered [kW]
16-27 Power Filtered [hp]
16-3* Drive Status
16-30 DC Link Voltage
16-32 Brake Energy /s
16-33 Brake Energy /2 min
16-34 Heatsink Temp.
16-35 Inverter Thermal
16-36 Inv. Nom. Current
16-37 Inv. Max. Current
16-38 SL Controller State
16-39 Control Card Temp.
16-40 Logging Buffer Full
16-41 Logging Buffer Full
16-43 Timed Actions Status
16-45 Motor Phase U Current
16-46 Motor Phase V Current
16-47 Motor Phase W Current
16-49 Current Fault Source
16-5* Ref. & Feedb.
16-50 External Reference
16-52 Feedback[Unit]
16-53 Digi Pot Reference
16-54 Feedback 1 [Unit]
16-55 Feedback 2 [Unit]
16-56 Feedback 3 [Unit]
16-58 PID Output [%]
16-59 Adjusted Setpoint
16-6* Inputs & Outputs
16-60 Digital Input
16-61 Terminal 53 Switch Setting
16-62 Analog Input 53
16-63 Terminal 54 Switch Setting
16-64 Analog Input 54
16-65 Analog Output 42 [mA]
16-66 Digital Output [bin]
16-67 Pulse Input #29 [Hz]
16-68 Pulse Input #33 [Hz]
16-69 Pulse Output #27 [Hz]
16-70 Pulse Output #29 [Hz]
16-71 Relay Output [bin]
16-72 Counter A
16-73 Counter B
16-75 Analog In X30/11
16-76 Analog In X30/12
16-77 Analog Out X30/8 [mA]
16-8* Fieldbus & FC Port
16-80 Fieldbus CTW 1
16-82 Fieldbus REF 1
16-84 Comm. Option STW
16-85 FC Port CTW 1
16-86 FC Port REF 1
16-9* Diagnosis Readouts
16-90 Alarm Word
16-91 Alarm Word 2
16-92 Warning Word
16-93 Warning Word 2
16-94 Ext. Status Word
16-95 Ext. Status Word 2
16-96 Maintenance Word
18- Info & Readouts**
18-0* Maintenance Log
18-00 Maintenance Log: Item
18-01 Maintenance Log: Action
18-02 Maintenance Log: Time
18-03 Maintenance Log: Date and Time
18-1* Fire Mode Log
18-10 FireMode Log:Event
18-11 Fire Mode Log: Time
18-12 Fire Mode Log: Date and Time
18-3* Inputs & Outputs
18-30 Analog Input X42/1
18-31 Analog Input X42/3
18-32 Analog Input X42/5
18-33 Analog Out X42/7 [V]
18-34 Analog Out X42/9 [V]
18-35 Analog Out X42/11 [V]
18-36 Analog Input X48/2 [mA]
18-37 Temp. Input X48/4
18-38 Temp. Input X48/7
18-39 Temp. Input X48/10
18-5* Ref. & Feedb.
18-50 Sensorless Readout [unit]
18-57 Air Pressure to Flow Air Flow
19- Application Parameters**
19-00 Configuration Mode
19-01 Multi-pump control
19-02 Appl Alarm Word
19-03 Appl Warning Word
19-04 Appl Status Word
19-05 System Command
19-06 Staging Speed [RPM]
19-07 Staging Speed [Hz]
19-08 Destaging Speed [RPM]
19-09 Destaging Speed [Hz]
19-10 Pump Exercise Idle Time
19-11 Pump Exercise Run Time
19-12 Flow Compensation
19-13 Friction Loss
19-14 Friction Loss 1
19-15 Friction Loss 2
19-16 Friction Loss 3
19-17 Friction Loss 4
19-18 Calculated Setpoint
19-19 PID Output[%]
19-20 No Water Loss of Prime Fault
19-21 No Water Loss of Prime Protection Delay
19-22 No Water Loss of Prime Restart Time
19-23 No Water Loss of Prime Restart Attempt
19-24 No Flow Shutdown
19-25 No Flow Restart Difference
19-26 High System Fault
19-27 High System Limit
19-28 High System Delay
19-29 Suction Feedback
19-30 Suction Input
19-31 Cascade Pump Status
19-32 Low Suction Fault
19-33 Low Suction Cut-out
19-34 Low Suction Delay
19-35 Low Suction Restart Limit
19-36 High Suction Fault
19-37 High Suction Cut-out
19-38 High Suction Delay
19-39 High Suction Restart Limit
19-40 All Zones Failure Function
19-41 All Zones Failure Number of Pumps
19-42 All Zones Failure Speed [RPM]
19-43 All Zones Failure Speed [Hz]
19-44 Zone Status
19-45 Low System Fault
19-46 Low System Limit
19-47 Low System Delay
19-48 System Restart Time
19-49 System Restart Attempts
19-50 Number of Pumps
19-51 Standby Pumps
19-52 Alternation Function
19-53 Alternation Time Interval
19-54 Pump Status
19-55 Lead Pump
19-56 Pump Address
19-57 Timed Destage
19-58 Bypass Drives Fail
19-59 Bypass Run Pumps
19-60 Stage Speed
19-61 Stage Proof Time
19-62 Stabilization Time
19-63 Destage Percentage
19-64 Destage Proof Time
19-65 Analog Output 42 Function
19-66 Forced Destage Speed
19-67 Forced Destage Proof Time
19-68 Relay 1 Function
19-69 Relay 2 Function
19-70 Flow Feedback Input
19-71 Flow Feedback
19-72 EOC Staging Function
19-73 Max. Pump Flow
19-74 EOC Stage Percentage
19-75 EOC Stage Proof Time
19-76 EOC Destage Percentage
19-77 EOC Destage Proof Time
19-78 Flow Destage Value
19-79 Flow Destage Proof Time
19-80 Feedback 4 Source
19-81 Feedback 4
19-82 Control Feedback
19-83 Setpoint 4
19-84 Alternate Setpoint 1
19-85 Alternate Setpoint 2
19-86 Alternate Setpoint 3
19-87 Alternate Setpoint 4
19-88 Control Zone
19-89 Control Setpoint
19-90 Pipe Fill Function
19-91 Triggered Pressure
19-92 Speed Step
19-93 Steady Time
19-94 Dead Band
19-95 Pipe Fill Max Pump
19-96 System Speed [Hz]
19-97 Priming Delay
19-98 System kW
19-99 Application Version
20- Drive Closed Loop**
20-0* Feedback
20-00 Feedback 1 Source
20-01 Feedback 1 Conversion
20-02 Feedback 1 Source Unit
20-03 Feedback 2 Source
20-04 Feedback 2 Conversion
20-05 Feedback 2 Source Unit
20-06 Feedback 3 Source
20-07 Feedback 3 Conversion
20-08 Feedback 3 Source Unit
20-12 Reference/Feedback Unit
20-13 Minimum Reference/Feedb.
20-14 Maximum Reference/Feedb.
20-2* Feedback/Setpoint
20-20 Feedback Function
20-21 Setpoint 1
20-22 Setpoint 2
20-23 Setpoint 3
20-3* Feedb. Adv. Conv.
20-30 Refrigerant
20-31 User Defined Refrigerant A1
20-32 User Defined Refrigerant A2
20-33 User Defined Refrigerant A3
20-34 Duct 1 Area [m2]
20-35 Duct 1 Area [in2]
20-36 Duct 2 Area [m2]
20-37 Duct 2 Area [in2]
20-38 Air Density Factor [%]
20-6* Sensorless
20-60 Sensorless Unit
20-69 Sensorless Information
20-7* PID Autotuning
20-70 Closed Loop Type
20-71 PID Performance
20-72 PID Output Change
20-73 Minimum Feedback Level
20-74 Maximum Feedback Level
20-79 PID Autotuning
20-8* PID Basic Settings
20-81 PID Normal/ Inverse Control
20-82 PID Start Speed [RPM]
20-83 PID Start Speed [Hz]
20-84 On Reference Bandwidth
20-9* PID Controller
20-91 PID Anti Windup
20-93 PID Proportional Gain
20-94 PID Integral Time
20-95 PID Differentiation Time
20-96 PID Diff. Gain Limit
21- Ext. Closed Loop**
21-0* Ext. CL Autotuning
21-00 Closed Loop Type
21-01 PID Performance
21-02 PID Output Change
21-03 Minimum Feedback Level
21-04 Maximum Feedback Level
21-09 PID Autotuning
21-1* Ext. CL 1 Ref./Fb.
21-10 Ext. 1 Ref./Feedback Unit
21-11 Ext. 1 Minimum Reference
21-12 Ext. 1 Maximum Reference
21-13 Ext. 1 Reference Source
21-14 Ext. 1 Feedback Source
21-15 Ext. 1 Setpoint
21-17 Ext. 1 Reference [Unit]
21-18 Ext. 1 Feedback [Unit]
21-19 Ext. 1 Output [%]
21-2* Ext. CL 1 PID
21-20 Ext. 1 Normal/Inverse Control
21-21 Ext. 1 Proportional Gain
21-22 Ext. 1 Integral Time
21-23 Ext. 1 Differentation Time
21-24 Ext. 1 Dif. Gain Limit
21-26 Ext. 1 On Reference Bandwidth
21-3* Ext. CL 2 Ref./Fb.
21-30 Ext. 2 Ref./Feedback Unit
21-31 Ext. 2 Minimum Reference
21-32 Ext. 2 Maximum Reference
21-33 Ext. 2 Reference Source

21-34 Ext. 2 Feedback Source
21-35 Ext. 2 Setpoint
21-37 Ext. 2 Reference [Unit]
21-38 Ext. 2 Feedback [Unit]
21-39 Ext. 2 Output [%]
21-4* Ext. CL 2 PID
21-40 Ext. 2 Normal/Inverse Control
21-41 Ext. 2 Proportional Gain
21-42 Ext. 2 Integral Time
21-43 Ext. 2 Differentation Time
21-44 Ext. 2 Dif. Gain Limit
21-46 Ext. 2 On Reference Bandwidth
21-5* Ext. CL 3 Ref./Fb.
21-50 Ext. 3 Ref./Feedback Unit
21-51 Ext. 3 Minimum Reference
21-52 Ext. 3 Maximum Reference
21-53 Ext. 3 Reference Source
21-54 Ext. 3 Feedback Source
21-55 Ext. 3 Setpoint
21-57 Ext. 3 Reference [Unit]
21-58 Ext. 3 Feedback [Unit]
21-59 Ext. 3 Output [%]
21-6* Ext. CL 3 PID
21-60 Ext. 3 Normal/Inverse Control
21-61 Ext. 3 Proportional Gain
21-62 Ext. 3 Integral Time
21-63 Ext. 3 Differentation Time
21-64 Ext. 3 Dif. Gain Limit
21-66 Ext. 3 On Reference Bandwidth
22- Appl. Functions**
22-0* Miscellaneous
22-00 Pump Protect Delay (North America)
22-00 External Interlock Delay (International)
22-01 Power Filter Time
22-1* Air Pres. To Flow
22-10 Air Pressure to Flow Signal source
22-11 Air Pressure to Flow Fan k-factor
22-12 Air Pressure to Flow Air density
22-13 Air Pressure to Flow Fan flow unit
22-2* No-Flow Detection
22-20 No Flow Power Calibration (North America)
22-20 Low Power Auto Set-up (International)
22-21 Low Power Detection
22-22 Low Speed Detection
22-23 No-Flow Function
22-24 Sleep Delay (North America)
22-24 No-Flow Delay (International)
22-26 No Water/Loss of Prime Function (N.A)
22-26 Dry Pump Function (International)
22-27 No Water/Loss of Prime Protection (N.A.)
22-27 Dry Pump Delay (International)
22-3* No-Flow Power Tuning
22-30 No-Flow Power
22-31 Power Correction Factor
22-32 Low Speed [RPM]
22-33 Low Speed [Hz]
22-34 Low Speed Power [kW]
22-35 Low Speed Power [HP]
22-36 High Speed [RPM]
22-37 High Speed [Hz]
22-38 High Speed Power [kW]
22-39 No Water/Loss of Prime Limit [HP]
22-4* Sleep Mode
22-40 Minimum Run Time
22-41 Minimum Sleep Time
22-42 Wake-up Speed [RPM]
22-43 Wake-up Speed [Hz]
22-44 Wake-up Ref./FB Difference
22-45 Setpoint Boost
22-46 Maximum Boost Time
22-5* Under Pressure (North America)
22-5* End of Curve (International)
22-50 Under Pressure Function (N.A.)
22-50 End of Curve Function (International)
22-51 Under Pressure Delay Time (North America)
22-51 End of Curve Delay (International)
22-52 End of Curve Tolerance
22-6* Broken Belt Detection
22-60 Broken Belt Function
22-61 Broken Belt Torque
22-62 Broken Belt Delay
22-7* Short Cycle Protection
22-75 Short Cycle Protection
22-76 Interval between Starts
22-77 Minimum Run Time
22-78 Minimum Run Time Override
22-79 Minimum Run Time Override Value
22-8* Flow Compensation
22-80 Flow Compensation
22-81 Square-linear Curve Approximation
22-82 Work Point Calculation
22-83 Speed at No-Flow [RPM]
22-84 Speed at No-Flow [Hz]
22-85 Speed at Design Point [RPM]
22-86 Speed at Design Point [Hz]
22-87 Pressure at No-Flow Speed
22-88 Pressure at Rated Speed
22-89 Flow at Design Point
22-90 Flow at Rated Speed
23- Time-based Functions**
23-0* Timed Actions
23-00 ON Time
23-01 ON Action
23-02 OFF Time
23-03 OFF Action
23-04 Occurrence
23-0* Timed Actions Settings
23-08 Timed Actions Mode
23-09 Timed Actions Reactivation
23-10 Maintenance Item
23-1* Maintenance
23-10 Maintenance Item
23-11 Maintenance Action
23-12 Maintenance Time Base
23-13 Maintenance Time Interval
23-14 Maintenance Date and Time
23-1* Maintenance Reset
23-15 Reset Maintenance Word
23-16 Maintenance Text
23-5* Energy Log
23-50 Energy Log Resolution
23-51 Period Start
23-53 Energy Log
23-54 Reset Energy Log
23-6* Trending
23-60 Trend Variable
23-61 Continuous Bin Data
23-62 Timed Bin Data
23-63 Timed Period Start
23-64 Timed Period Stop
23-65 Minimum Bin Value
23-66 Reset Continuous Bin Data
23-67 Reset Timed Bin Data
23-8* Payback Counter
23-80 Power Reference Factor
23-81 Energy Cost
23-82 Investment
23-83 Energy Savings
23-84 Cost Savings
24- Appl. Functions 2**
24-0* Fire Mode
24-00 Fire Mode Function
24-01 Fire Mode Configuration
24-02 Fire Mode Unit
24-03 Fire Mode Min Reference
24-04 Fire Mode Max Reference
24-05 Fire Mode Preset Reference
24-06 Fire Mode Reference Source
24-07 Fire Mode Feedback Source
24-09 Fire Mode Alarm Handling
24-1* Drive Bypass
24-10 Drive Bypass Function
24-11 Drive Bypass Delay Time
24-9* Multi-Motor Funct.
24-90 Missing Motor Function
24-91 Missing Motor Coefficient 1
24-92 Missing Motor Coefficient 2
24-93 Missing Motor Coefficient 3
24-94 Missing Motor Coefficient 4
24-95 Locked Rotor Function
24-96 Locked Rotor Coefficient 1
24-97 Locked Rotor Coefficient 2
24-98 Locked Rotor Coefficient 3
24-99 Locked Rotor Coefficient 4
25- Constant Slave Controller**
25-0* System Settings
25-00 Cascade Controller
25-02 Motor Start
25-04 Run Time Equalization
25-05 Fixed Lead Pump
25-06 Number of Pumps
25-2* Bandwidth Settings
25-20 Staging Bandwidth
25-21 Override Bandwidth
25-22 Fixed Speed Bandwidth
25-23 SBW Staging Delay
25-24 SBW Destaging Delay
25-25 OBW Time
25-26 Destage At No-Flow
25-27 Stage Function
25-28 Stage Function Time
25-29 Destage Function
25-30 Destage Function Time
25-4* Staging Settings
25-40 Ramp Down Delay
25-41 Ramp Up Delay
25-42 Staging Threshold
25-43 Destaging Threshold
25-44 Staging Speed [RPM]
25-45 Staging Speed [Hz]
25-46 Destaging Speed [RPM]
25-47 Destaging Speed [Hz]
25-5* Alternation Settings
25-50 Lead Pump Alternation
25-51 Alternation Event
25-52 Alternation Time Interval
25-53 Alternation Timer Value
25-54 Alternation Predefined Time
25-55 Alternate if Load < 50%
25-56 Staging Mode at Alternation
25-58 Run Next Pump Delay
25-59 Run on Mains Delay
25-8* Status
25-80 Cascade Status
25-81 Pump Status
25-82 Lead Pump
25-83 Relay Status
25-84 Pump ON Time
25-85 Relay ON Time
25-86 Reset Relay Counters
25-9* Service
25-90 Pump Interlock
25-91 Manual Alternation
26- Analog I/O Option**
26-0* Analog I/O Mode
26-00 Terminal X42/1 Mode
26-01 Terminal X42/3 Mode
26-02 Terminal X42/5 Mode
26-1* Analog Input X42/1
26-10 Terminal X42/1 Low Voltage
26-11 Terminal X42/1 High Voltage
26-14 Term. X42/1 Low Ref./Feedb. Value
26-15 Term. X42/1 High Ref./Feedb. Value
26-16 Term. X42/1 Filter Time Constant
26-17 Term. X42/1 Sensor Fault
26-2* Analog Input X42/3
26-20 Terminal X42/3 Low Voltage
26-21 Terminal X42/3 High Voltage
26-24 Term. X42/3 Low Ref./Feedb. Value
26-25 Term. X42/3 High Ref./Feedb. Value
26-26 Term. X42/3 Filter Time Constant
26-27 Term. X42/3 Sensor Fault
26-3* Analog Input X42/5
26-30 Terminal X42/5 Low Voltage
26-31 Terminal X42/5 High Voltage
26-34 Term. X42/5 Low Ref./Feedb. Value
26-35 Term. X42/5 High Ref./Feedb. Value
26-36 Term. X42/5 Filter Time Constant
26-37 Term. X42/5 Sensor Fault
26-4* Analog Out X42/7
26-40 Terminal X42/7 Output
26-41 Terminal X42/7 Min. Scale
26-42 Terminal X42/7 Max. Scale
26-43 Terminal X42/7 Bus Control
26-44 Terminal X42/7 Timeout Preset
26-5* Analog Out X42/9
26-50 Terminal X42/9 Output
26-51 Terminal X42/9 Min. Scale
26-52 Terminal X42/9 Max. Scale
26-53 Terminal X42/9 Bus Control
26-54 Terminal X42/9 Timeout Preset
26-6* Analog Out X42/11
26-60 Terminal X42/11 Output
26-61 Terminal X42/11 Min. Scale
26-62 Terminal X42/11 Max. Scale
26-63 Terminal X42/11 Bus Control
26-64 Terminal X42/11 Timeout Preset
30- Special Features**
30-2* Adv. Start Adjust
30-22 Locked Rotor Detection
30-23 Locked Rotor Detection Time [s]
31- Bypass Option**
31-00 Bypass Mode
31-01 Bypass Start Time Delay
31-02 Bypass Trip Time Delay
31-03 Test Mode Activation
31-10 Bypass Status Word
31-11 Bypass Running Hours
31-19 Remote Bypass Activation
34- MCO Data Readouts**
34-0* PCD Write Par.
34-01 PCD 1 Write to MCO
34-02 PCD 2 Write to MCO
34-03 PCD 3 Write to MCO
34-04 PCD 4 Write to MCO
34-05 PCD 5 Write to MCO
34-06 PCD 6 Write to MCO
34-07 PCD 7 Write to MCO
34-08 PCD 8 Write to MCO
34-09 PCD 9 Write to MCO
34-10 PCD 10 Write to MCO
34-2* PCD Read Par.
34-21 PCD 1 Read from MCO
34-22 PCD 2 Read from MCO
34-23 PCD 3 Read from MCO
34-24 PCD 4 Read from MCO
34-25 PCD 5 Read from MCO
34-26 PCD 6 Read from MCO
34-27 PCD 7 Read from MCO
34-28 PCD 8 Read from MCO
34-29 PCD 9 Read from MCO
34-30 PCD 10 Read from MCO
35- Sensor Input Option**
35-0* Temp. Input Mode
35-00 Term. X48/4 Temperature Unit

35-01 Term. X48/4 Input Type
35-02 Term. X48/7 Temperature Unit
35-03 Term. X48/7 Input Type
35-04 Term. X48/10 Temperature Unit
35-05 Term. X48/10 Input Type
35-06 Temperature Sensor Alarm Function
35-1* Temp. Input X48/4
35-14 Term. X48/4 Filter Time Constant
35-15 Term. X48/4 Temp. Monitor
35-16 Term. X48/4 Low Temp. Limit
35-17 Term. X48/4 High Temp. Limit
35-2* Temp. Input X48/7
35-24 Term. X48/7 Filter Time Constant
35-25 Term. X48/7 Temp. Monitor
35-26 Term. X48/7 Low Temp. Limit
35-27 Term. X48/7 High Temp. Limit
35-3* Temp. Input X48/10
35-34 Term. X48/10 Filter Time Constant
35-35 Term. X48/10 Temp. Monitor
35-36 Term. X48/10 Low Temp. Limit
35-37 Term. X48/10 High Temp. Limit
35-4* Analog Input X48/2
35-42 Term. X48/2 Low Current
35-43 Term. X48/2 High Current
35-44 Term. X48/2 Low Ref./Feedb. Value
35-45 Term. X48/2 High Ref./Feedb. Value
35-46 Term. X48/2 Filter Time Constant
35-47 Term. X48/2 Sensor Fault
99-* Devel support
99-0* DSP Debug
99-00 DAC 1 selection
99-01 DAC 2 selection
99-02 DAC 3 selection
99-03 DAC 4 selection
99-04 DAC 1 scale
99-05 DAC 2 scale
99-06 DAC 3 scale
99-07 DAC 4 scale
99-08 Test param 1
99-09 Test param 2
99-10 DAC Option Slot
99-1* Hardware Control
99-11 RFI 2
99-12 Fan
99-1* Software Readouts
99-13 Idle time
99-14 Paramdb requests in queue
99-15 Secondary Timer at Inverter Fault
99-16 No of Current Sensors
99-2* Heatsink Readouts
99-20 HS Temp. (PC1)
99-21 HS Temp. (PC2)
99-22 HS Temp. (PC3)
99-23 HS Temp. (PC4)
99-24 HS Temp. (PC5)
99-25 HS Temp. (PC6)
99-26 HS Temp. (PC7)
99-27 HS Temp. (PC8)
99-2* Platform Readouts
99-29 Platform Version
99-4* Software Control
99-40 StartupWizardState
99-5* PC Debug
99-50 PC Debug Selection
99-51 PC Debug 0
99-52 PC Debug 1
99-53 PC Debug 2
99-54 PC Debug 3
99-55 PC Debug 4
99-56 Fan 1 Feedback
99-57 Fan 2 Feedback
99-58 PC Auxiliary Temp
99-59 Power Card Temp.
99-9* Internal Values
99-90 Options present
99-91 Motor Power Internal
99-92 Motor Voltage Internal
99-93 Motor Frequency Internal
99-94 Imbalance derate [%]
99-95 Temperature derate [%]
99-96 Overload derate [%]

11 Product Warranty

For Bell & Gossett and CentriPro

Commercial warranty

Warranty. For goods sold to commercial buyers, Seller warrants the goods sold to Buyer hereunder (with the exception of membranes, seals, gaskets, elastomer materials, coatings and other "wear parts" or consumables all of which are not warranted except as otherwise provided in the quotation or sales form) will be (i) be built in accordance with the specifications referred to in the quotation or sales form, if such specifications are expressly made a part of this Agreement, and (ii) free from defects in material and workmanship for a period of thirty-six (36) months from the date of installation or forty-two (42) months from the date of shipment (which date of shipment shall not be greater than ndythirty (30) days after receipt of notice that the goods are ready to ship), whichever shall occur first, unless a longer period is specified in the product documentation (the "Warranty").

Except as otherwise required by law, Seller shall, at its option and at no cost to Buyer, either repair or replace any product which fails to conform with the Warranty provided Buyer gives written notice to Seller of any defects in material or workmanship within ten (10) days of the date when any defects or non-conformance are first manifest. Under either repair or replacement option, Seller shall not be obligated to remove or pay for the removal of the defective product or install or pay for the installation of the replaced or repaired product and Buyer shall be responsible for all other costs, including, but not limited to, service costs, shipping fees and expenses. Seller shall have sole discretion as to the method or means of repair or replacement. Buyer's failure to comply with Seller's repair or replacement directions shall terminate Seller's obligations under this Warranty and render the Warranty void. Any parts repaired or replaced under the Warranty are warranted only for the balance of the warranty period on the parts that were repaired or replaced. Seller shall have no warranty obligations to Buyer with respect to any product or parts of a product that have been: (a) repaired by third parties other than Seller or without Seller's written approval; (b) subject to misuse, misapplication, neglect, alteration, accident, or physical damage; (c) used in a manner contrary to Seller's instructions for installation, operation and maintenance; (d) damaged from ordinary wear and tear, corrosion, or chemical attack; (e) damaged due to abnormal conditions, vibration, failure to properly prime, or operation without flow; (f) damaged due to a defective power supply or improper electrical protection; or (g) damaged resulting from the use of accessory equipment not sold or approved by Seller. In any case of products not manufactured by Seller, there is no warranty from Seller; however, Seller will extend to Buyer any warranty received from Seller's supplier of such products.

THE FOREGOING WARRANTY IS EXCLUSIVE AND IN LIEU OF ANY AND ALL OTHER EXPRESS OR IMPLIED WARRANTIES, GUARANTEES, CONDITIONS OR TERMS OF WHATEVER NATURE RELATING TO THE GOODS PROVIDED HEREUNDER, INCLUDING WITHOUT LIMITATION ANY IMPLIED WARRANTIES OF MERCHANTABILITY AND FITNESS FOR A PARTICULAR PURPOSE, WHICH ARE HEREBY EXPRESSLY DISCLAIMED AND EXCLUDED. EXCEPT AS OTHERWISE REQUIRED BY LAW, BUYER'S EXCLUSIVE REMEDY AND SELLER'S AGGREGATE LIABILITY FOR BREACH OF ANY OF THE FOREGOING WARRANTIES ARE LIMITED TO REPAIRING OR REPLACING THE PRODUCT AND SHALL IN ALL CASES BE LIMITED TO THE AMOUNT PAID BY THE BUYER FOR THE DEFECTIVE PRODUCT. IN NO EVENT SHALL SELLER BE LIABLE FOR ANY OTHER FORM OF DAMAGES, WHETHER DIRECT, INDIRECT, LIQUIDATED, INCIDENTAL, CONSEQUENTIAL, PUNITIVE, EXEMPLARY OR SPECIAL DAMAGES, INCLUDING BUT NOT LIMITED TO LOSS OF PROFIT, LOSS OF ANTICIPATED SAVINGS OR REVENUE, LOSS OF INCOME, LOSS OF BUSINESS, LOSS OF PRODUCTION, LOSS OF OPPORTUNITY OR LOSS OF REPUTATION.

Limited consumer warranty

Warranty. For goods sold for personal, family or household purposes, Seller warrants the goods purchased hereunder (with the exception of membranes, seals, gaskets, elastomer materials, coatings and other "wear parts" or consumables all of which are not warranted except as otherwise provided in the quotation or sales form) will be free from defects in material and workmanship for a period of thirty-six (36) months from the date of installation or forty-two (42) months from the product date code, whichever shall occur first, unless a longer period is provided by law or is specified in the product documentation (the "Warranty").

Except as otherwise required by law, Seller shall, at its option and at no cost to Buyer, either repair or replace any product which fails to conform with the Warranty provided Buyer gives written notice to Seller of any defects in material or workmanship within ten (10) days of the date when any defects or non-conformance are first manifest. Under either repair or replacement option, Seller shall not be obligated to remove or pay for the removal of the defective product or install or pay for the installation of the replaced or repaired product and Buyer shall be responsible for all other costs, including, but not limited to, service costs, shipping fees and expenses. Seller shall have sole discretion as to the method or means of repair or replacement. Buyer's failure to comply with Seller's repair or replacement directions shall terminate Seller's obligations under this Warranty and render this Warranty void. Any parts repaired or replaced under the Warranty are warranted only for the balance of the warranty period on the parts that were repaired or replaced. The Warranty is conditioned on Buyer giving written notice to Seller of any defects in material or workmanship of warranted goods within ten (10) days of the date when any defects are first manifest.

Seller shall have no warranty obligations to Buyer with respect to any product or parts of a product that have been: (a) repaired by third parties other than Seller or without Seller's written approval; (b) subject to misuse, misapplication, neglect, alteration, accident, or physical damage; (c) used in a manner contrary to Seller's instructions for installation, operation and maintenance; (d) damaged from ordinary wear and tear, corrosion, or chemical attack; (e) damaged due to abnormal conditions, vibration, failure to properly prime, or operation without flow; (f) damaged due to a defective power supply or improper electrical protection; or (g) damaged resulting from the use of accessory equipment not sold or approved by Seller. In any case of products not manufactured by Seller, there is no warranty from Seller; however, Seller will extend to Buyer any warranty received from Seller's supplier of such products.

THE FOREGOING WARRANTY IS PROVIDED IN PLACE OF ALL OTHER EXPRESS WARRANTIES. ALL IMPLIED WARRANTIES, INCLUDING BUT NOT LIMITED TO THE IMPLIED WARRANTIES OF MERCHANTABILITY AND FITNESS FOR A PARTICULAR PURPOSE, ARE LIMITED TO THIRTY-SIX (36) MONTHS FROM THE DATE OF INSTALLATION OR FORTY-TWO (42) MONTHS FROM THE PRODUCT DATE CODE , WHICHEVER SHALL OCCUR FIRST. EXCEPT AS OTHERWISE REQUIRED BY LAW, BUYER'S EXCLUSIVE REMEDY AND SELLER'S AGGREGATE LIABILITY FOR BREACH OF ANY OF THE FOREGOING WARRANTIES ARE LIMITED TO REPAIRING OR REPLACING THE PRODUCT AND SHALL IN ALL CASES BE LIMITED TO THE AMOUNT PAID BY THE BUYER FOR THE DEFECTIVE PRODUCT. IN NO EVENT SHALL SELLER BE LIABLE FOR ANY OTHER FORM OF DAMAGES, WHETHER DIRECT, INDIRECT, LIQUIDATED, INCIDENTAL, CONSEQUENTIAL, PUNITIVE, EXEMPLARY OR SPECIAL DAMAGES, INCLUDING BUT NOT LIMITED TO LOSS OF PROFIT, LOSS OF ANTICIPATED SAVINGS OR REVENUE, LOSS OF INCOME, LOSS OF BUSINESS, LOSS OF PRODUCTION, LOSS OF OPPORTUNITY OR LOSS OF REPUTATION.

Some states do not allow limitations on how long an implied warranty lasts, so the above limitation may not apply to you. Some states do not allow the exclusion or limitation of incidental or consequential damages, so the above exclusions may not apply to you. This warranty gives you specific legal rights, and you may also have other rights which may vary from state to state.

To make a warranty claim, check first with the dealer from whom you purchased the product or visit www.xyleminc.com for the name and location of the nearest dealer providing warranty service.

For Lowara

For Lowara only: for information about warranty, see the sales contract.

Xylem |ˈzīləm|

1) The tissue in plants that brings water upward from the roots;
2) a leading global water technology company.

We're a global team unified in a common purpose: creating advanced technology solutions to the world's water challenges. Developing new technologies that will improve the way water is used, conserved, and re-used in the future is central to our work. Our products and services move, treat, analyze, monitor and return water to the environment, in public utility, industrial, residential and commercial building services settings. Xylem also provides a leading portfolio of smart metering, network technologies and advanced analytics solutions for water, electric and gas utilities. In more than 150 countries, we have strong, long-standing relationships with customers who know us for our powerful combination of leading product brands and applications expertise with a strong focus on developing comprehensive, sustainable solutions.

For more information on how Xylem can help you, go to www.xylem.com

xylem
Let's Solve Water

Xylem Inc.
8200 N. Austin Avenue
Morton Grove IL 60053
Tel: (847) 966–3700
Fax: (847) 965–8379
www.xylem.com/bellgossett

Visit our Web site for the latest version of this document and more information

The original instruction is in English. All non-English instructions are translations of the original instruction.

© 2020 Xylem Inc

Bell & Gossett is a trademark of Xylem Inc or one of its subsidiaries.

P2003509_Rev 2_February 2020_en-US_Technologic Intelligent Pump Controller