INSTRUCTION MANUAL

P2003337 REV D

Integrated Bypass Panel

xylem

Let's Solve Water

Table of Contents

Safety

⚠WARNING

EQUIPMENT HAZARD!

The vertical bypass panel contains dangerous voltages when connected to mains voltage. It is strongly recommended that all electrical work conform to the National Electrical Code (NEC) and all national and local regulations. Installation, start-up and maintenance should be performed only by qualified personnel. Failure to follow the NEC or local regulations could result in death or serious injury.

Motor control equipment and electronic controls are connected to hazardous mains voltages. Extreme care should be taken to protect against shock. The user must be protected against supply voltage and the motor must be protected against overload in accordance with applicable national and local regulations. Be sure equipment is properly grounded. Wear safety glasses whenever working on electric control or rotating equipment.

⚠WARNING

UNINTENDED START!

When the vertical bypass panel is connected to AC input power, the motor may start at any time. The drive, panel, motor, and any driven equipment must be in operational readiness. Failure to be in operational readiness when panel and drive are connected to AC input power could result in death, serious injury, or equipment or property damage.

Warning against unintended start

When the vertical bypass panel is connected to mains, the motor may be started by means of an external switch, a serial bus command, an input reference signal, or a cleared fault condition. Use appropriate cautions to guard against an unintended start.

⚠WARNING

GROUNDING HAZARD!

For operator safety, it is important to ground drive, vertical bypass panel, and motor properly. Follow the grounding guidelines of local and national codes. Failure to follow grounding guidelines could result in death or serious injury.

Grounding

Correct protective grounding of the equipment must be established in accordance with national and local codes. Ground currents are higher than 3mA.

Safety Guidelines

1. Disconnect the drive and vertical bypass panel from mains before commencing service work
2. DO NOT touch electrical parts of the vertical bypass panel or drive when mains is connected. After mains has been disconnected, wait 15 minutes before touching any electrical components or read the label on vertical bypass panel.
3. The user must be protected against supply voltage and the motor must be protected against overload in accordance with applicable national and local regulations.
4. While programming parameters, the motor may start without warning. Activate the [Off] key on the LCP when changing parameters.
5. The [Off] key on the LCP does not isolate the drive from mains voltage and is not to be used as a safety switch.

1 Introduction

1.1.1 Purpose of the Manual

This manual only provides necessary information for installation, operation and maintenance of the Electronically Controlled Bypass (ECB) panel used in conjunction with a variable frequency drive (VFD). To enable efficient handling of the equipment, requirements are provided for installation of mechanical, electrical, control wiring, proper grounding, and environmental considerations. Pre-start and start up procedures are detailed. Also included is a detailed overview of the panel bypass function. In addition, identification of other optional components and their operation and start up troubleshooting instructions are included. For the electronically controlled bypass, additional programming and operation information is provided.

1.1.2 Product Overview

⚠WARNING This product can expose you to chemicals including Lead, which is known to the State of California to cause cancer and birth defects or other reproductive harm. For more information go to: www.P65Warnings.ca.gov.

A variable frequency drive regulates the speed and operation of an electric motor. The drive is programmable and offers many features and savings compared to operating a motor from unregulated line voltage. The panel is a protective enclosure in which the drive and various optional components are assembled and mounted. The bypass panel allows switching between running the motor from the drive (variable speed) or across the line input power (constant speed).

The bypass panel comes with the Electronically Controlled Bypass (ECB) control option.

The ECB uses contactors to provide power to the motor through the drive or bypass circuitry. The ECB contains a local processor that interacts with the drive's control logic for programmable options, remote inputs, and status reporting. The VFD's logic circuitry is backed up by an independent panel-mounted power supply so that, even if the drive loses power, control and communication functions are maintained. Programming and display are provided by the LCP. An important feature of the ECB is the ability to accept commands from a building automation system (BAS) and to report operational status in return.

See more detailed descriptions in section 5 Electronically Controlled Bypass (ECB) Operation of this manual.

1.1.3 Typical Bypass Operation

With contactors M1 and M2 closed and contactor M3 open, the motor is running in drive control. Opening contactor M2 removes power to the motor but allows the drive to remain under power. This is referred to as test mode. With contactors M1 and M2 open and contactor M3 closed, the motor is running in bypass from the line input power.

1.2 Bypass Circuits

1.2.1 Three-contactor Bypass

The bypass circuit consists of a bypass contactor (M3) interlocked with a drive output contactor (M2), a drive input contactor (M1), and an overload relay. The test position applies power to the motor through the bypass (M3 closed) contactor but removes power from the drive (M2 open) while keeping the drive powered (M1 closed). A Pilot light indicates when in bypass.

Contactor	Drive Mode	OFF	Bypass Mode	Test Mode
M1	Closed	Open	Open	Closed
M2	Closed	Open	Open	Open
M3	Open	Open	Closed	Closed

Table 1.1 Contactor Operation

1.3 Bypass Options

1.3.1 Common Run/Stop with Bypass

Allows a remote signal to initiate operation in either drive control or bypass depending upon the position of the bypass selector switch.

1.3.2 Automatic Bypass

This feature automatically transfers the motor from drive to bypass without operator intervention when a fault condition trips the drive, after a programmable time-out period. The VFD's internal fault circuitry controls this action. The time delay permits all automatically resettable faults to clear prior to transfer to bypass. Run permissive or safety circuit signals override the auto bypass function and may prevent or delay bypass operation.

1.3.3 Run Permissive in Bypass

With run permissive active, the drive sends a run request and waits for a remote response before commanding the motor to start. The response indicates the system is safe to operate.

1.3.4 Basic Fire Mode in Bypass

This option switches the panel to bypass whenever a remote fire mode signal is given to the VFD through the input terminals. In either drive or bypass, fire mode is intended to ignore common safety and overload inputs for emergency situations. The motor will continue to run in bypass until fire mode is removed or the drive, panel, or motor fails. External safety signals and motor overload are ignored when in fire mode.

1.3.5 Advanced Fire Mode in Bypass

The advanced fire mode allows for a variety of programmable responses to an external fire mode command signal. Bypass options are programmed through the drive's fire mode parameters. See 5.1.13 ECB Advanced Fire Mode.

1.3.6 Overload Protection

This thermally activated device provides mechanical overload protection for the motor while in bypass operation. It measures motor current and is set to the full load amps (FLA) of the motor. A 1.2 x FLA service factor is built-in and maintained, meaning that should the motor current increase above that value, the overload will calculate the level of increase to activate timing for the trip function. The higher the current draw, the quicker the trip response. The overload provides Class 20 motor protection.

1.4 Bypass Platform Configurations

The ECB has all option features: Safety Interlock, Common Start/Stop, Automatic Bypass, Run Permissive, Basic Fire Mode, Advanced Fire Mode and Serial Communication. See section 5 Electronically Controlled Bypass (ECB) Operation for the ECB.

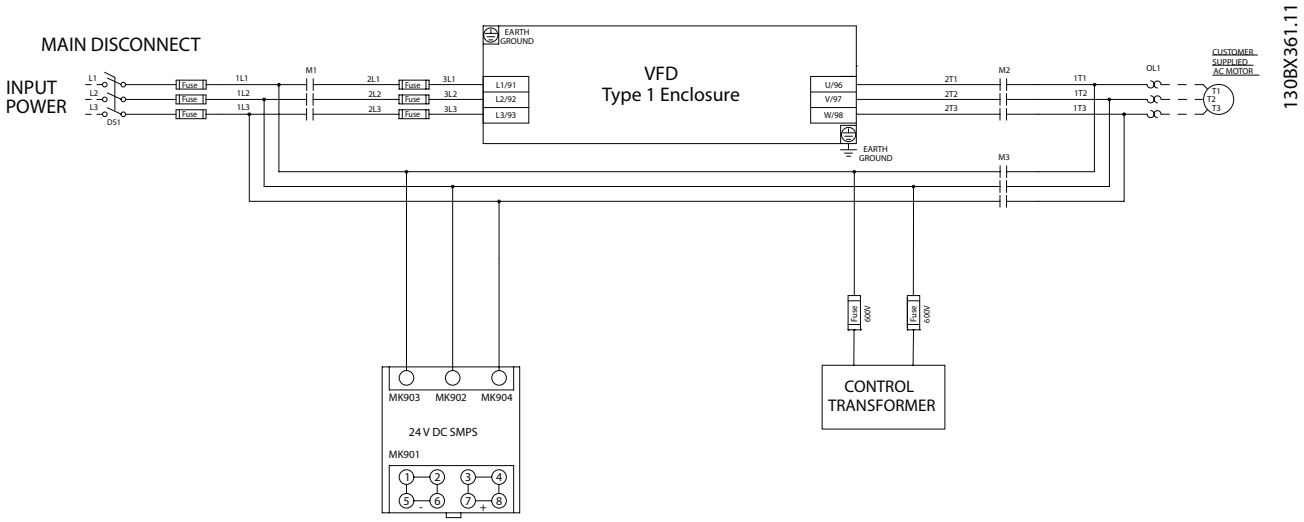

Figure 1.1 Basic Bypass Circuit

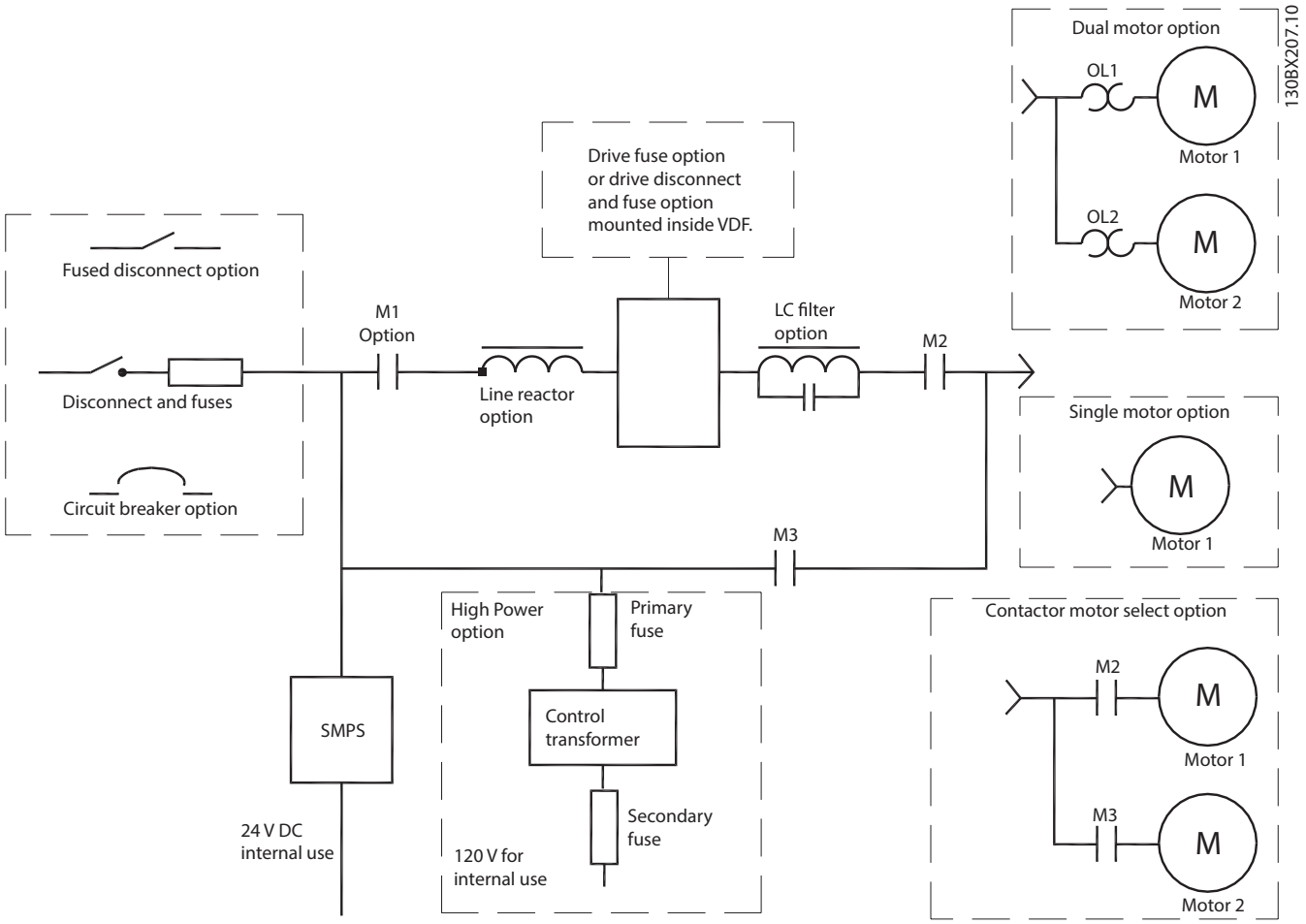

Figure 1.2 Bypass Circuit with Options

1.5 Switch Mode Power Supply (SMPS)

The VFD's logic circuitry is backed up by an independent panel-mounted switch mode power supply so if the drive loses power, control and communication functions are maintained. The SMPS converts three-phase AC input power to 24 V DC control power. Since the SMPS draws power from all three phases, it offers immunity protection from most phase-loss and brown-out conditions. The SMPS is internally protected from short circuit on its output and three board-mounted fuses provide additional protection. The SMPS is not designed for external use and may take up to 5 sec. to initialize at power-up. The SMPS will maintain a 24 V DC output with a low input line voltage. The 200 Volt SMPS will maintain the 24 V DC output with a line voltage as low as 150 V AC and the 600 V SMPS to 335 V AC. Refer to Figure 1.1.

1.5.1 Control Transformer

A control transformer is included on larger horsepower units where the contactor coils are AC. The control transformer steps down the line input voltage to 120V AC. The coils of AC contactors are isolated from the Switch Mode Power Supply via relays.

1.6 Disconnects

1.6.1 Main Disconnect

The main disconnect removes line input power to the drive and bypass. A main disconnect is available in four options.

- **Fused disconnect.** Two-position (ON/OFF) rotary switch, padlock compatible, with three fuses, one on each phase, built into the switch. For safety, the switch must be in the OFF position before the option panel door can be opened.

1.6.2 Panel Configurations

See Figure 1.3 and Figure 1.4 for descriptions and available options.

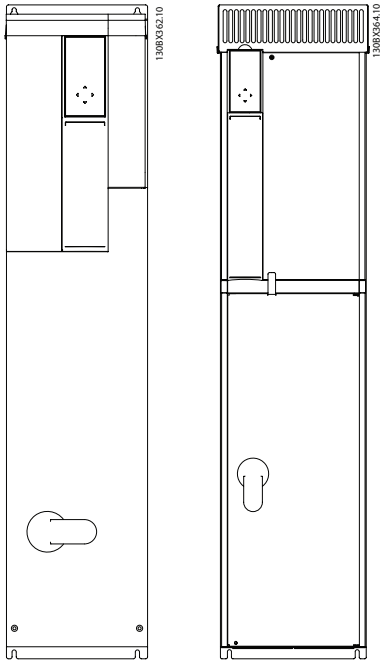

Figure 1.3 Vertical Bypass Panel

Tier 2

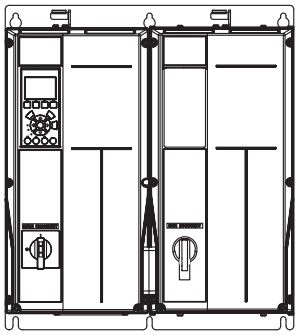

Figure 1.4 Horizontal Bypass Panels

1.6.3 Panel Voltage and Frame Ratings

Table 1.2 and Table 1.3 define the voltage and hp ratings of the bypass panels. See section 7 Appendix for overall and mounting dimensions.

Frame B3	**Vertical NEMA 1**
Volts VAC	HP (kW)
208 & 230	7.5 (5.5) - 15 (11)
460 & 600	15 (11) - 25 (18.5)
Frame B4	**Vertical NEMA 1**
Volts VAC	HP (kW)
208	20 (15)
230	20 (15) - 25 (18.5)
460 & 600	30 (22) - 50 (37)
Frame C3	**Vertical NEMA 1**
Volts VAC	HP (kW)
208	25 (18.5) - 40 (30)
230	30 (22) - 40 (30)
460 & 600	60 (45) - 75 (55)
Frame C4	**Vertical NEMA 1**
Volts VAC	HP (kW)
208 & 230	50 (37) - 60 (45)
460 & 600	100 (75) - 125 (90)

Table 1.2 NEMA 1 Voltage and Frame Ratings for Vertical Bypass Panels

Frame A2 to A5	NEMA 12	NEMA 1
Volts VAC	HP (kW)	HP (kW)
208 & 230	0.5 (0.37) - 5 (3.7)	0.5 (0.37) - 5 (3.7)
460	0.5 (0.37) - 10 (7.5)	0.5 (0.37) - 10 (7.5)
600	0.5 (0.37) - 10 (7.5)	0.5 (0.37) - 10 (7.5)
Frame B1	**NEMA 12**	
Volts VAC	HP (kW)	
208 & 230	7.5 (5.5) - 10 (7.5)	
460	15 (11) - 25 (18.5)	
600	15 (11) - 25 (18.5)	
Frame B2	**NEMA 12**	
Volts VAC	HP (kW)	
208 & 230	15 (11) - 20 (15)	
460	30 (22) - 40 (30)	
600	30 (22) - 40 (30)	
Frame C1	**NEMA 12**	
Volts VAC	HP (kW)	
208 & 230	25 (18.5) - 30 (22)	
460	50 (37) - 75 (55)	
600	50 (37) - 75 (55)	
Frame C2	**NEMA 12**	
Volts VAC	HP (kW)	
208 & 230	40 (30) - 60 (45)	
460	100 (75) - 125 (90)	
600	100 (75) - 125 (90)	
Frame D1	**NEMA 12**	**NEMA 1**
Volts VAC	HP (kW)	HP (kW)
460	150 (110) - 200 (132)	150 (110) - 200 (132)
600	150 (110) - 200 (132)	150 (110) - 200 (132)
Frame D2	**NEMA 12**	**NEMA 1**
Volts VAC	HP (kW)	HP (kW)
460	250 (160) - 350 (250)	250 (160) - 350 (250)
600	250 (160) - 400 (300)	250 (160) - 400 (300)

Table 1.3 NEMA 1 and NEMA 12 Voltage and Frame Ratings for Horizontal Bypass Panels

1.7 Power Component Functions

1.7.1 Power Fusing

For main power fuses, only use the specified fuse or an equivalent replacement. For drive fuses only use the specified fuse. See the fuse ratings label on the inside cover of the unit or Table 3.2, Table 3.3, Table 3.4, Table 3.5, Table 3.6, Table 3.7, Table 3.8 and Table 3.9.

Main fusing

Main fuses are located ahead of the drive and bypass. Main fuses are designed to protect the circuitry within the bypass panel but is not adequate to protect the drive. Main fuses are dual-element, time-delay types and mount inside the bypass enclosure.

Drive fusing

Drive fuses are located ahead of the drive and are a fast- acting type. Drive fuses are standard in all bypass panels.

2 Pre-installation

2.1.1 Receiving Inspection

Inspect the packaging and equipment closely when received. Any indication of careless handling by the carrier should be noted on the delivery receipt, especially if the equipment will not be immediately uncrated. Obtain the delivery person's signed agreement to any noted damages for any future insurance claims. Ensure that the model number and power match the order and intended use for the drive.

IMPORTANT! LOST OR DAMAGED GOODS INSPECT THIS SHIPMENT IMMEDIATELY UPON ARRIVAL

If goods are received short or in damaged condition, insist on a notation of the loss or damage across the face of the freight bill. Otherwise no claim can be enforced against the transportation company. If concealed loss or damage is discovered, notify your carrier at once and request an inspection. This is absolutely necessary. Unless you do this the carrier will not entertain any claim for loss or damage. The agent will make an inspection and can grant a concealed damage notation. If you give the transportation company a clear receipt for equipment that has been damaged or lost in transit, you do so at your own risk and expense.

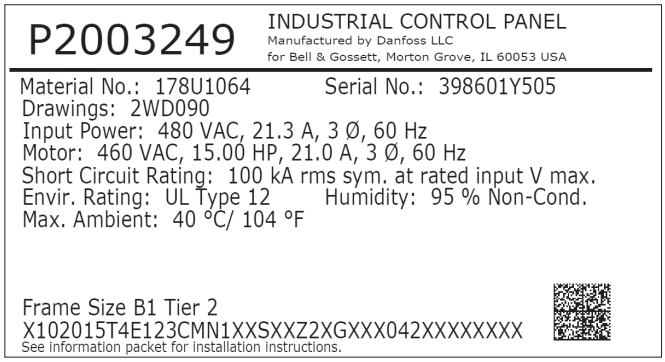
P2003249
INDUSTRIAL CONTROL PANEL
Manufactured by Danfoss LLC
for Bell & Gossett, Morton Grove, IL 60053 USA
Material No.: 178U1064 Serial No.: 398601Y505
Drawings: 2WD090
Input Power: 480 VAC, 21.3 A, 3 Ø, 60 Hz
Motor: 460 VAC, 15.00 HP, 21.0 A, 3 Ø, 60 Hz
Short Circuit Rating: 100 kA rms sym. at rated input V max.
Envir. Rating: UL Type 12 Humidity: 95 % Non-Cond.
Max. Ambient: 40 °C/ 104 °F
Frame Size B1 Tier 2
X102015T4E123CMN1XXSXXZ2XGXXX042XXXXXXXX
See information packet for installation instructions.

Figure 2.1 Sample Panel Label

Ensure that the model number and power match the order and intended use for the drive.

2.1.2 Pre-installation Check

1. Compare panel model number to what was ordered.
2. Ensure each of the following are rated for the same voltage:
   - Drive
   - Panel
   - Power line
   - Motor
3. Ensure that the panel output rating is equal to or greater than motor total full load current for full motor performance.
   - Motor power size and panel must match for proper overload protection.
   - If panel rating is less than motor; full motor output cannot be achieved.
4. Check motor wiring:
   - Any disconnect between drive and motor should be interlocked to drive safety interlock circuit to avoid unwanted drive trips.
   - Do not connect power factor correction capacitors between the drive and motor.
   - Two speed motors must be wired permanently for full speed.
   - Y-start, Δ-run motors must be wired permanently for run.

2.1.3 Installation Site Check

- Because the panel relies on the ambient air for cooling, it is important to observe the limitations on ambient air temperature. Derating concerns start above 104°F (40°C) and 3300 feet (1000m) elevation above sea level.
- It is important with multiple panels to check wall strength. Make sure that the proper mounting screws or bolts are used.
- Ensure that the wall or floor area for installation will support the weight of the unit.
- If construction work continues after the equipment is mounted, it is important to keep the interior free from concrete dust and metallic shavings. If the unit does not have power applied to it, supply a protective covering. It is important to ensure that the components stay as clean as possible. It may be necessary to clean the interior once construction is completed.
- Keep drawings and manuals accessible for detailed installation and operation instructions. It is important that the manuals be available for equipment operators.

2.2 Harsh Environments

The mechanical and electrical components within the panel can be adversely affected by the environment. The effects of contaminants in the air, either solid, liquid, or gas, are difficult to quantify and control.

2.2.1 Airborne Liquids

Liquids in the air can condense in components. Water carried in the air is easily measured as relative humidity, but other vapors are often more difficult to measure or control. Steam, oil and salt water vapor may cause corrosion of components. In such environments, use TYPE 12 enclosures to limit the exchange of outside air into the option enclosure. Extremely harsh environments may require a higher level of protection.

2.2.2 Airborne Solids

Particles in the air may cause mechanical, electrical or thermal failure in components. A TYPE 1 enclosure provides a reasonable degree of protection against falling particles, but it will not prevent the fan from pulling dirty air into the enclosure.

2.2.3 Corrosive Chemicals

In environments with high temperatures and humidity, corrosive gases such as sulfur, nitrogen and chlorine compounds cause corrosion to occur on components. Indications of corrosion are blackened copper or rust on steel or oxidized aluminum. In such environments, it is recommended that the equipment be mounted in a cabinet with fresh air ventilation and that corrosive compounds be kept away. A non-ventilated cabinet fitted with an air conditioner as a heat exchanger may be used. Conformal coated circuit boards may be specified to reduce the corrosive effects of a harsh environment.

3 Installation

3.1.1 Tools Required

In addition to the standard tool kit, the tools in Table 3.1 are recommended for installation of the panel.

Spreader bar capable of lifting up to 750 lbs. (340 kg) Max diameter 0.5 in. (12.7 mm)
Forklift, crane, hoist or other lifting device capable of handling up to 750 lbs. (340 kg) (Qualified device operator available for operating the equipment.)
Metric Socket Set: 7 - 19mm
Socket Extensions: 4, 6, and 12 inch
Torque driver set: T10 - T40
Torque wrench: 6 - 375 lbs-in (0.5 - 45 Nm)
Allen Wrenches:1/8, 3/16, 1/4, & 5/16 inches
Metric or English wrenches: 7 - 19mm

Table 3.1 Tools Required

3.1.2 Drive Fuses

To maintain UL, the drive fuses should be replaced only with the fuses specified in Table 3.2 to Table 3.9. If an alternate drive fuse is desired please consult the factory. See the specifications label inside the cover of the unit for acceptable replacement drive fuses. A sample of this data can be seen in Table 3.10.

3 x 208V AC					
Frame	**HP (KW)**	**Panel Rated Current (A)**	**Main Fuse Bussman**	**Drive Fuse Bussman**	**Transformer Fuse Bussman**
B3	7.5 (5.5)	24.2	LPJ-40-SP	JJN-50	-
	10 (7.5)	30.8	LPJ-50-SP	JJN-50	-
	15 (11)	46.2	LPJ-70-SP	JJN-60	-
B4	20 (15)	59.4	LPJ-90-SP	JJN-80	-
C3	25 (18.5)	74.8	LPJ-125-SP	JJN-125	-
	30 (22)	88.0	LPJ-150-SP	JJN-125	-
	40 (30)	114.0	LPJ-175-SP	JJN-150	-
C4	50 (37)	143.0	LPJ-250-SP	JJN-200	FNQ-R-1.25
	60 (45)	169.0	LPJ-250-SP	JJN-250	FNQ-R-1.25

Table 3.2 Vertical Panel Drive Fuse 208V

3 x 230V AC					
Frame	**HP (KW)**	**Panel Rated Current (A)**	**Main Fuse Bussman**	**Drive Fuse Bussman**	**Transformer Fuse Bussman**
B3	7.5 (5.5)	22.0	LPJ-35-SP	JJN-50	-
	10 (7.5)	28.0	LPJ-45-SP	JJN-50	-
	15 (11)	42.0	LPJ-70-SP	JJN-60	-
B4	20 (15)	54.0	LPJ-90-SP	JJN-80	-
	25 (18.5)	68.0	LPJ-100-SP	JJN-125	-
C3	30 (22)	80.0	LPJ-125-SP	JJN-125	-
	40 (30)	104.0	LPJ-150-SP	JJN-150	-
C4	50 (37)	130.0	LPJ-200-SP	JJN-200	FNQ-R-1.25
	60 (45)	154.0	LPJ-250-SP	JJN-250	FNQ-R-1.25

Table 3.3 Vertical Panel Drive Fuse 230V

3 x 460V AC					
Frame	**HP (KW)**	**Panel Rated Current (A)**	**Main Fuse Bussman**	**Drive Fuse Bussman**	**Transformer Fuse Bussman**
B3	15 (11)	21.0	LPJ-35-SP	JJS-40	-
	20 (15)	27.0	LPJ-40-SP	JJS-40	-
	25 (18.5)	34.0	LPJ-50-SP	JJS-50	-
B4	30 (22)	40.0	LPJ-60-SP	JJS-60	-
	40 (30)	52.0	LPJ-80-SP	JJS-80	-
	50 (37)	65.0	LPJ-100-SP	JJS-100	-
C3	60 (45)	77.0	LPJ-125-SP	JJS-125	-
	75 (55)	96.0	LPJ-150-SP	JJS-150	-
C4	100 (75)	124.0	LPJ-200-SP	JJS-200	FNQ-R-0.60
	125 (90)	156.0	LPJ-250-SP	JJS-250	FNQ-R-0.60

Table 3.4 Vertical Panel Drive Fuse 460V

3 x 600V AC					
Frame	**HP (KW)**	**Panel Rated Current (A)**	**Main Fuse Bussman**	**Drive Fuse Bussman**	**Transformer Fuse Bussman**
B3	15 (11)	17.0	LPJ-30-SP	JJS-35	-
	20 (15)	22.0	LPJ-35-SP	JJS-35	-
	25 (18.5)	27.0	LPJ-45-SP	JJS-45	-
B4	30 (22)	32.0	LPJ-50-SP	JJS-50	-
	40 (30)	41.0	LPJ-60-SP	JJS-60	-
	50 (37)	52.0	LPJ-80-SP	JJS-80	-
C3	60 (45)	62.0	LPJ-100-SP	JJS-100	-
	75 (55)	77.0	LPJ-125-SP	JJS-125	-
C4	100 (75)	99.0	LPJ-150-SP	JJS-150	FNQ-R-0.50
	125 (90)	125.0	LPJ-200-SP	JJS-175	FNQ-R-0.50

Table 3.5 Vertical Panel Drive Fuse 600V

3 x 208V AC					
Frame	**HP (KW)**	**Panel Rated Current (A)**	**Main Fuse Bussman**	**Drive Fuse Bussman**	**Transformer Fuse Bussman**
A2, A5	0.5 (0.37)	2.4	LPJ-4-SP	LP-CC-5	-
	0.75(0.55)	3.5	LPJ-6-SP	LP-CC-10	-
	1 (0.75)	4.6	LPJ-7-SP	LP-CC-10	-
	1.5 (1.1)	6.6	LPJ-10-SP	LP-CC-10	-
	2 (1.5)	7.5	LPJ-12-SP	LP-CC-15	-
	3 (2.2)	10.6	LPJ-20-SP	LP-CC-20	-
A3, A5	5 (3.7)	16.7	LPJ-30-SP	LP-CC-30	-
B1	7.5 (5.5)	24.2	LPJ-40-SP	JJN-50	-
	10 (7.5)	30.8	LPJ-50-SP	JJN-50	-
B2	15 (11)	46.2	LPJ-70-SP	JJN-80	-
	20 (15)	59.4	LPJ-90-SP	JJN-80	-
C1	25 (18.5)	74.8	LPJ-125-SP	JJN-125	-
	30 (22)	88.0	LPJ-150-SP	JJN-125	-
C2	40 (30)	114.0	LPJ-175-SP	FWX-200B	FNQ-R-1.25, FNM-1.25
	50 (37)	143.0	LPJ-250-SP	FWX-200B	FNQ-R-1.25, FNM-1.25
	60 (45)	169.0	LPJ-250-SP	FWX-250A	FNQ-R-1.25, FNM-1.25

Table 3.6 Horizontal Panel Drive Fuse 208V

3 x 230V AC					
Frame	**HP (KW)**	**Panel Rated Current (A)**	**Main Fuse Bussman**	**Drive Fuse Bussman**	**Transformer Fuse Bussman**
A2, A5	0.5 (0.37)	2.2	LPJ-4-SP	LP-CC-5	-
	0.75(0.55)	3.2	LPJ-6-SP	LP-CC-10	-
	1 (0.75)	4.2	LPJ-7-SP	LP-CC-10	-
	1.5 (1.1)	6.0	LPJ-10-SP	LP-CC-10	-
	2 (1.5)	6.8	LPJ-12-SP	LP-CC-15	-
	3 (2.2)	9.6	LPJ-20-SP	LP-CC-20	-
A3, A5	5 (3.7)	15.2	LPJ-30-SP	LP-CC-30	-
B1	7.5 (5.5)	22.0	LPJ-40-SP	JJN-50	-
	10 (7.5)	28.0	LPJ-50-SP	JJN-50	-
B2	15 (11)	42.0	LPJ-70-SP	JJN-80	-
	20 (15)	54.0	LPJ-90-SP	JJN-80	-
C1	25 (18.5)	68.0	LPJ-125-SP	JJN-125	-
	30 (22)	80.0	LPJ-150-SP	JJN-125	-
C2	40 (30)	104.0	LPJ-175-SP	FWX-200B	FNQ-R-1.25, FNM-1.25
	50 (37)	130.0	LPJ-250-SP	FWX-200B	FNQ-R-1.25, FNM-1.25
	60 (45)	154.0	LPJ-250-SP	FWX-250A	FNQ-R-1.25, FNM-1.25

Table 3.7 Horizontal Panel Drive Fuse 230V

3 x 460V AC					
Frame	**HP (KW)**	**Panel Rated Current (A)**	**Main Fuse Bussman**	**Drive Fuse Bussman**	**Transformer Fuse Bussman**
A2,A5	0.5 (0.37)	1.1	LPJ-2-SP	LP-CC-6	-
	0.75(0.55)	1.6	LPJ-3-SP	LP-CC-6	-
	1 (0.75)	2.1	LPJ-3-SP	LP-CC-6	-
	1.5 (1.1)	3.0	LPJ-4-SP	LP-CC-6	-
	2 (1.5)	3.4	LPJ-6-SP	LP-CC-10	-
	3 (2.2)	4.8	LPJ-8-SP	LP-CC-10	-
	5 (3.7)	7.6	LPJ-12-SP	LP-CC-20	-
A3-A5	7.5 (5.5)	11.0	LPJ-20-SP	LP-CC-25	-
	10 (7.5)	14.0	LPJ-25-SP	LP-CC-30	-
B1	15 (11)	21.0	LPJ-35-SP	JJS-40	-
	20 (15)	27.0	LPJ-40-SP	JJS-40	-
	25 (18.5)	34.0	LPJ-50-SP	JJS-50	-
B2	30 (22)	40.0	LPJ-60-SP	JJS-60	-
	40 (30)	52.0	LPJ-80-SP	JJS-80	-
C1	50 (37)	65.0	LPJ-100-SP	JJS-100	-
	60 (45)	77.0	LPJ-125-SP	JJS-125	-
	75 (55)	96.0	LPJ-150-SP	JJS-150	-
C2	100 (75)	124.0	LPJ-200-SP	FWH-200	FNQ-R-0.6, FNM-1.25
	125 (90)	156.0	LPJ-250-SP	FWH-250	FNQ-R-0.6, FNM-1.25
D1	150 (110)	180.0	LPJ-300-SP	170M3018	LP-CC-1.80, LP-CC-5.0
	200 (132)	240.0	LPJ-400-SP	170M3018	LP-CC-1.80, LP-CC-5.0
D2	250 (160)	302.0	LPJ-500-SP	170M4016	LP-CC-1.80, LP-CC-5.0
	300 (200)	361.0	LPJ-600-SP	170M4016	LP-CC-3.00, LP-CC-7
	350 (250)	414.0	LPJ-600-SP	170M4016	LP-CC-3.00, LP-CC-7

Table 3.8 Horizontal Panel Drive Fuse 460V

3 x 600V AC					
Frame	**HP (KW)**	**Panel Rated Current (A)**	**Main Fuse Bussman**	**Drive Fuse Bussman**	**Transformer Fuse Bussman**
A2, A5	0.5 (0.37)	0.9 A	LPJ-2-SP	LP-CC-5	-
	0.75(0.55)	1.3 A	LPJ-2-SP	LP-CC-5	-
	1 (0.75)	1.7 A	LPJ-3-SP	LP-CC-5	-
	1.5 (1.1)	2.4 A	LPJ-4-SP	LP-CC-5	-
	2 (1.5)	2.7 A	LPJ-5-SP	LP-CC-5	-
	3 (2.2)	3.9 A	LPJ-6-SP	LP-CC-10	-
	5 (3.7)	6.1 A	LPJ-10-SP	LP-CC-10	-
A3, A5	7.5 (5.5)	9.0 A	LPJ-15-SP	LP-CC-20	-
	10 (7.5)	11.0 A	LPJ-20-SP	LP-CC-20	-
B1	15 (11)	17.0 A	LPJ-30-SP	JJS-40	-
	20 (15)	22.0 A	LPJ-35-SP	JJS-40	-
	25 (18.5)	27.0 A	LPJ-45-SP	JJS-50	-
B2	30 (22)	32.0 A	LPJ-50-SP	JJS-60	-
	40 (30)	41.0 A	LPJ-60-SP	JJS-80	-
C1	50 (37)	52.0 A	LPJ-80-SP	JJS-100	-
	60 (45)	62.0 A	LPJ-100-SP	JJS-125	-
	75 (55)	77.0 A	LPJ-125-SP	JJS-150	-
C2	100 (75)	99.0 A	LPJ-150-SP	FWH-200	FNQ-R-0.6, FNM-1.25
	125 (90)	125.0 A	LPJ-200-SP	FWH-250	FNQ-R-0.6, FNM-1.25
D1	150 (110)	144.0 A	LPJ-250-SP	170M3018	LP-CC-2.5, LP-CC-6
	200 (132)	192.0 A	LPJ-350-SP	170M3018	LP-CC-2.5, LP-CC-6
D2	250 (160)	242.0 A	LPJ-450-SP	170M3018	LP-CC-2.5, LP-CC-6
	300 (200)	289.0 A	LPJ-500-SP	170M5011	LP-CC-2.5, LP-CC-6
	350 (250)	336.0 A	LPJ-600-SP	170M5011	LP-CC-2.5, LP-CC-6
	400 (315)	382.0 A	LPJ-600-SP	170M5011	LP-CC-2.5, LP-CC-6

Table 3.9 Horizontal Panel Drive Fuse 600V

3.1.3 Internal Main Panel Fuses

Use only the specified fuse or an equivalent replacement for the internal main fuses. See the specifications label inside the cover of the unit for acceptable replacement main fuses. A sample of this can be seen in Table 3.10.

Fuse	Description	Manufacturer Part	Part Number/ Size
F13A & C	Primary Transformer	Bussmann	FNQ-R-0.50
F15A, B, & C	Main Fuses	Bussmann	LPJ-30-SP
F16A, B, & C	Drive Fuses	Bussmann	JJS-35
F900, F901,F902	SMPS - Power Supply	Bussmann	FWH-020A6F, 500V

Table 3.10 Sample Fuse Rating Label

3.2 Mechanical Installation

3.2.1 Lifting

Check the weight of the unit before attempting to lift. Ensure that the lifting device is suitable for safely lifting the panel. If necessary, plan for a hoist, crane or forklift with appropriate rating to move the units.

3.2.2 Hoist or Overhead Lift

- Use a solid steel spreader bar for lifting. Slide the spreader bar through the two (2) lifting holes on the panel. Lifting rings are 0.59in (15mm) in diameter (see Figure 3.1). If VFD mounting screws interfere with the spreader bar, lifting hooks can be used instead of the lifting bar.
- Connect the spreader bar to a hoist or other lifting device.
- Carefully lift the unit and secure it to the wall. Refer to 8 Appendix for dimensional drawings to determine fasteners size and location.

3.2.3 Forklift

- Only a competent lift operator with additional support personnel should attempt moving the unit.
- Carefully position forklift and ensure stability prior to lift.

3.2.4 Shipping Weights

Weights listed in Table 3.11 are approximate for base units. Options can add or reduce weight of unit.

Frame	Weight lbs. (kg)
B3	84 (38)
B4	106 (48)
C3	167 (76)
C4	248 (112)

Frame	Tier 2 Weight lbs. (kg)
A2-A3	35 (16)
A5	55 (25)
B1	85 (39)
B2	105 (48)
C1	145 (66)
C2	190 (86)
D1	420 (190)
D2	630 (286)

Table 3.11 Approximate Shipping Weights

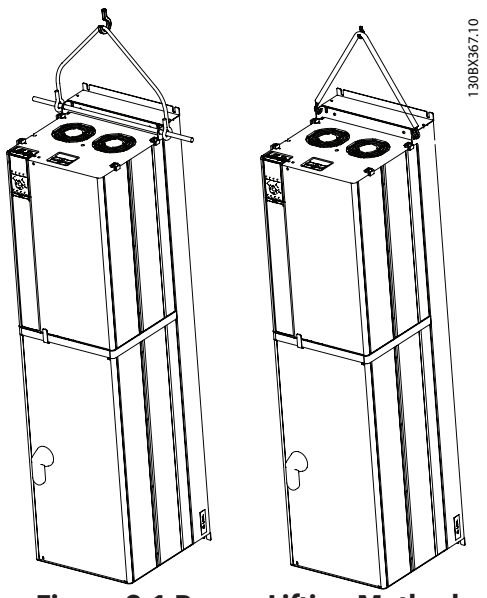

Figure 3.1 Proper Lifting Method

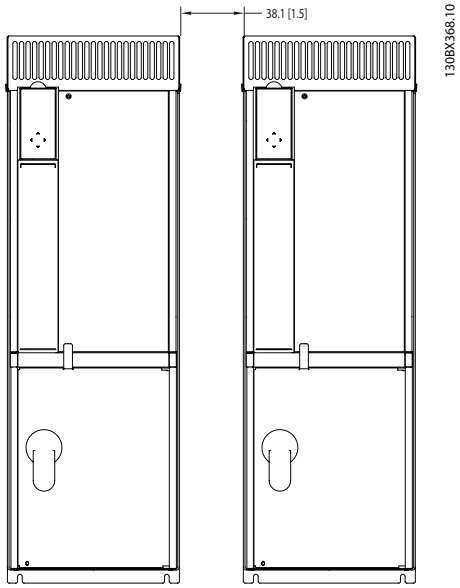

Figure 3.2 Side Cooling Clearance

3.3 Cooling

- Only mount the drive and panel vertically.
- Panels rely on the ambient air for cooling. It is important to observe the limitations on ambient air temperature. The maximum ambient temperature for vertical bypass panels is 40°C (104°F). See Table 3.12 Temperature Ratings for Horizontal Panels. Derating concerns start above 3300 feet (1000 m) elevation above sea level.
- Most panels may be mounted side-by-side without additional side clearance. However, the B3, A2 and A3 frame units require 1.5 in. (38.1mm) minimum clearance between units (see Figure 3.2).
- Top and bottom clearance is required for cooling (see Figure 3.3). Generally, 2 to 10 inches (50 to 250mm) minimum clearance is required, depending upon the hp (kW) of the unit. See the mechanical drawing shipped with the unit for specific requirements.
- No additional back plate is required for drives with the bypass panels.

Frame	NEMA 1	NEMA 12
A2 – A3	45°C (113°F)	NA
A5	NA	40°C (104°F)
B1 – C1	45°C (113°F)	40°C (104°F)
C2, D1 – D2	40°C (104°F)	40°C (104°F)

Table 3.12 Temperature Ratings for Horizontal Panels

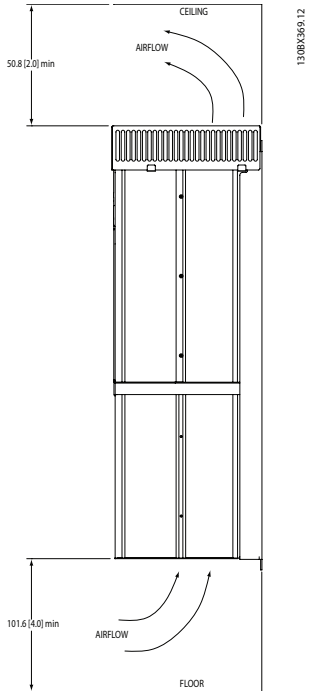

Figure 3.3 Cooling Airflow

3.4 Electrical Installation

⚠WARNING

EQUIPMENT HAZARD!
Rotating shafts and electrical equipment can be hazardous. It is strongly recommended that all electrical work conform to all national and local regulations. Installation, start-up and maintenance should be performed only by qualified personnel. Failure to follow local regulations could result in death or serious injury.

- Motor control equipment and electronic controls are connected to hazardous line voltages. Extreme care should be taken to protect against electrical hazard.
- Correct protective grounding of the equipment must be established. Ground currents are higher than 3mA.
- A dedicated ground wire is required.
- Wear safety glasses whenever working on electric control or rotating equipment.

NOTE!
Make all power connections with a minimum of 60°C/ 140°F rated copper wire.

⚠WARNING

INDUCED VOLTAGE!
Run output motor cables from multiple drives separately. Induced voltage from output motor cables run together can charge equipment capacitors even with the equipment turned off and locked out. Failure to run output motor cables separately could result in death or serious injury.

NOTE!
Run input power, motor wiring and control wiring in three separate metallic conduits or raceways for high frequency noise isolation. Failure to isolate power, motor and control wiring could result in less than optimum drive and associated equipment performance.

- Because the motor wiring carries high frequency electrical pulses, it is important to isolate this wiring from all other wiring. If the incoming power wiring is run in the same conduit as the motor wiring, these pulses can couple electrical noise back onto the building power grid.

At least three separate conduits must be connected to the panel (Figure 3.4).

- Power into the panel (and ground back to the distribution panel/transformer)
- Power from the panel to the motor and earth insulated motor ground
- Control wiring

Control wiring should always be isolated from the high voltage power wiring.

Avoid getting metal chips into electronics.

Follow the connection procedures as illustrated in the drawing provided with the unit.

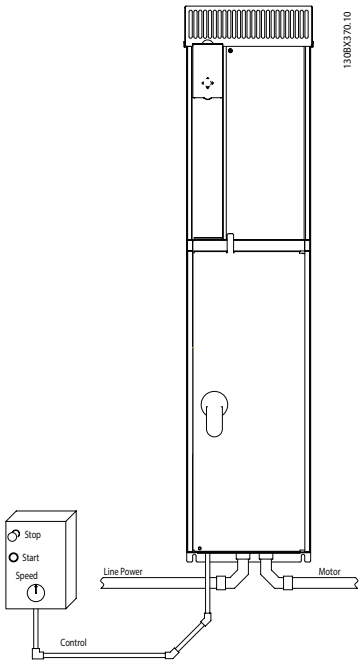

Figure 3.4 Power Connections

3.4.1 Component Identification & Customer Connection

Mechanical layout drawings are intended to provide the installer or equipment user with component identification and location for that specific unit. Figure 3.5 represents a typical vertical bypass panel layout drawing and Table 3.13 provides definitions for vertical drawing reference designators. Figure 3.6 represents a typical horizontal bypass panel layout drawing and Table 3.14 provides definitions for horizontal drawing reference designators. (Not all reference designators are shown.) See the mechanical layout drawings in section 7 Appendix.

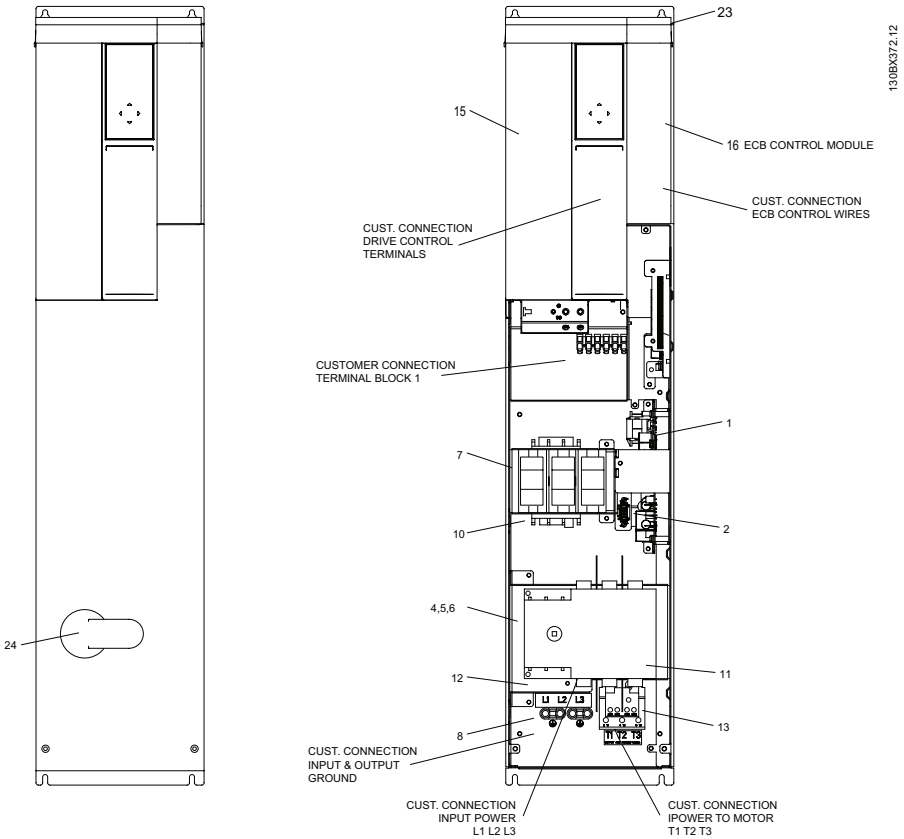

Figure 3.5 Sample Vertical Bypass Mechanical Layout Diagram

ID	Device	Definition
1	24 V DC	Panel 24 V DC SMPS
2	HPC	High Pot Connector
3	F13	T1 primary fuse
4	CB1	Main Circuit Breaker
5	DS1	Main or Drive Disconnect
6	F15	Main fuse
7	F16	Drive fuse
8	GND	Ground terminal
9	LCP	LCP
10	M1	Drive Input contactor
11	M2	Drive Output contactor
12	M3	Bypass contactor
13	OL1	Overload for Motor
14	TF	120 V AC control transformer
15	VFD	Variable frequency drive
16	ECB	Control Module
17	TB1-C	Terminal block 1 - Control
18	TB1-P	Terminal block 1 - Power
19	PR1	Control Relay for M1 Contactor
20	PR2	Control Relay for M2 Contactor
21	PR3	Control Relay for M3 Contactor
22	UVM	Under voltage module
23	TC	Top Cover
24	DH	Disconnect Handle

Table 3.13 Vertical Reference Designator Definitions

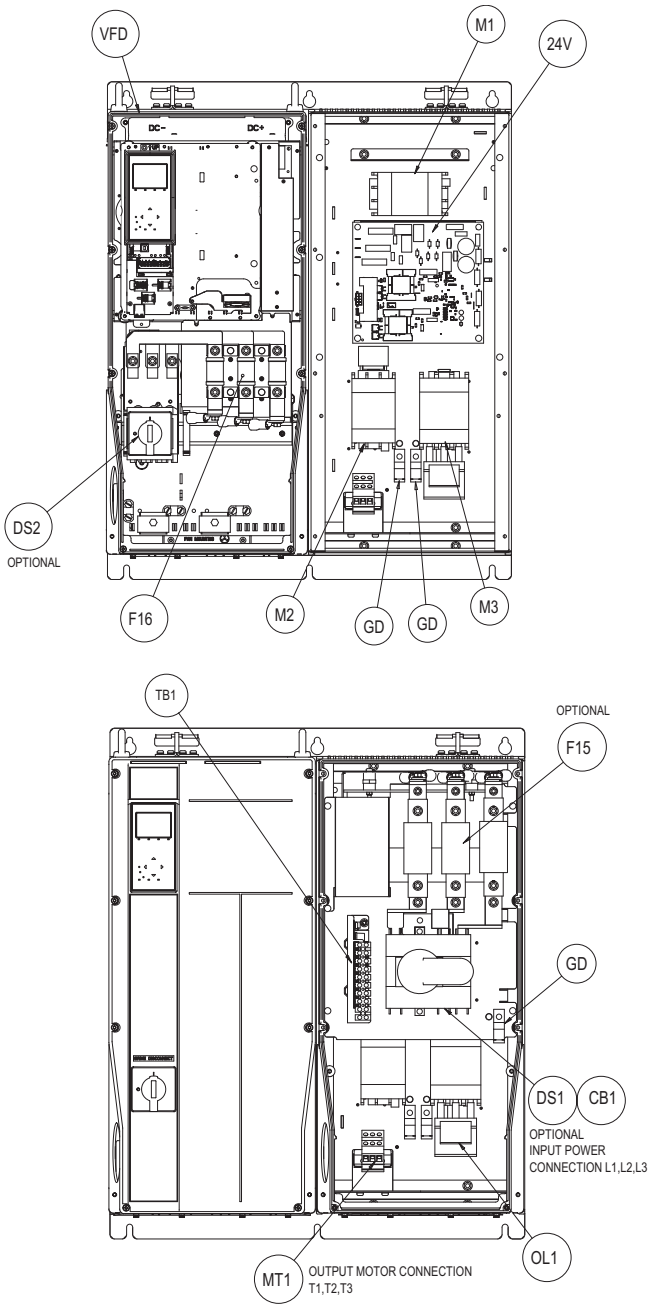

Figure 3.6 Sample Horizontal Bypass Mechanical Layout Diagram

ID	Definition	Function
24V	Option panel	24 Vdc SMPS Supply 24 Vdc control power to option panel for internal use only
CB1	Main circuit breaker	Provide isolation between option panel and current protection for incoming mains
DS1	Main or line disconnect	Provide isolation between option panel and mains
DS2	Drive disconnect	Provide isolation between VFD and line voltage
DF15	Main fused disconnect	Provide isolation between option panel and mains
DV1	VFD output motor filter	Output filter to provide filtering for PWM drive output wave form
F12	T1 secondary fuse	Current protection for internal 120 Vac control circuit
F13	T1 primary fuse	Current protection for line side of 120 Vac internal control transformer
F15	Line or main fuse	Provide current protection to option panel
F16	Drive fuse	Provide current protection to drive
GD	ground terminal	Customer connection for power grounds to mains and motor
LR1	VFD input line reactor	Input reactor to provide additional input impeadance to drive
M1	VFD input contactor	Provide isolation between VFD and line voltage
M2	VFD output contactor	Provide isolation between VFD and motor
M3	Bypass contactor	Provide line voltage to motor
M4	Motor 1 contactor	Used to select motor 1 operation
M5	Motor 2 contactor	Used to select motor 2 operation
MT1	Motor 1 connection terminal	Provides termination point for motor leads in option panel
OL1	Overload for motor 1	Provide overload protection to motor when running in bypass
OL2	Overload for motor 2	Provide overload protection to motor when running in bypass
S2	CMS selector switch	Operator interface for contactor motor selection
T1	120 Vac control transformer	Provide internal 120 Vac supply
T3	120 Vac control transformer	Provide customer 120 Vac supply
TB1	Terminal block 1	Customer bypass control connections for ECB-CMS
VFD	Variable frequency drive	Provide variable frequency and voltage to AC motor

Table 3.14 Horizontal Drawing Reference Designator Definitions

3.4.2 Wire and Cable Access

- Refer to Figures 3.9 through 3.13 for wire routing and termination locations.
- Removable access knockout covers are provided for cable connections (see Figure 3.7 and Figure 3.8).
- Access holes are provided for input power, motor leads, and control wiring.

NOTE!

RUN INPUT POWER, MOTOR WIRING AND CONTROL WIRING IN THREE SEPARATE METALLIC CONDUITS OR RACEWAYS FOR HIGH FREQUENCY NOISE ISOLATION. FAILURE TO ISOLATE POWER, MOTOR AND CONTROL WIRING COULD RESULT IN LESS THAN OPTIMUM DRIVE AND ASSOCIATED EQUIPMENT PERFORMANCE.

- The drive always resides in the upper section of the panel for vertical bypass panels, and on the left for horizontal bypass panels. Connections to the ECB are in the drive for all the vertical bypass panels with the exception of the B1 frame panel.
- Power connections are towards the bottom side of the panel.
- NEMA 12 enclosures are available for additional environmental protection.
- Control wiring should be isolated from power components inside the unit as much as possible. Xylem has included hardware to allow for the separation.
- See the mechanical layout drawing and the connection diagram supplied with the unit for connection details.

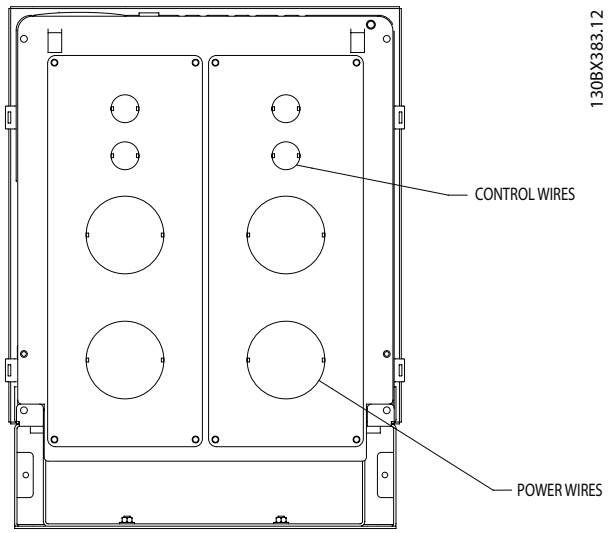

Figure 3.7 Vertical Panel Conduit Entry Program

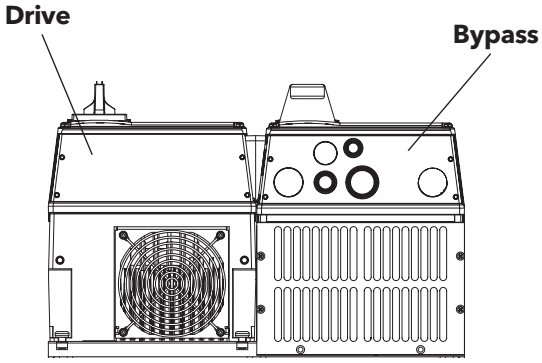

Tier 2 (bottom view) NEMA 1

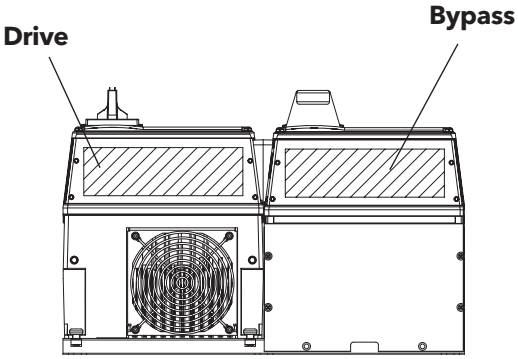

Tier 2 (bottom view) NEMA 12

Figure 3.8 Horizontal Bypass Panel Conduit Entry Program of Bypass

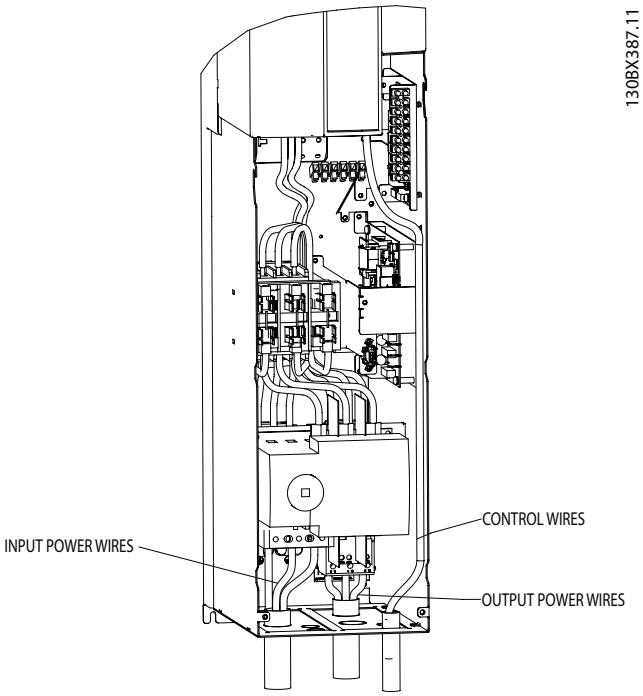

Figure 3.9 B3 Panel

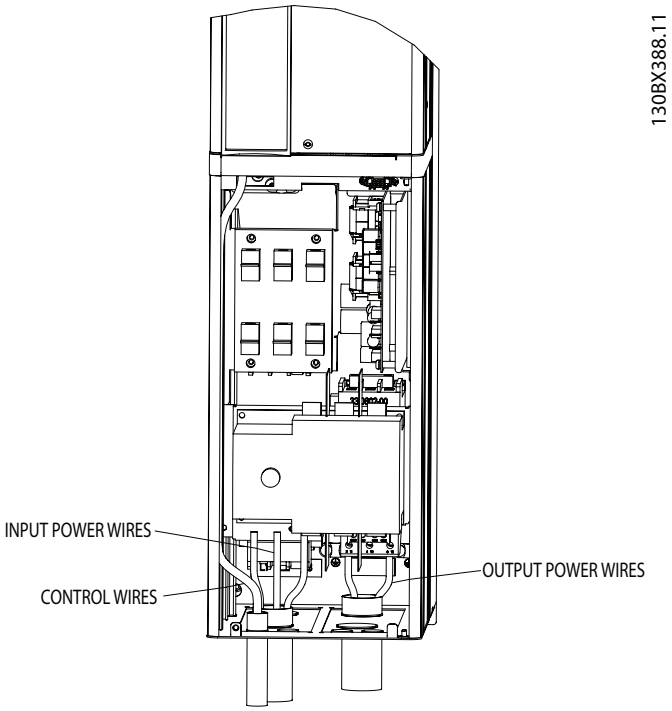

Figure 3.10 B4 Panel

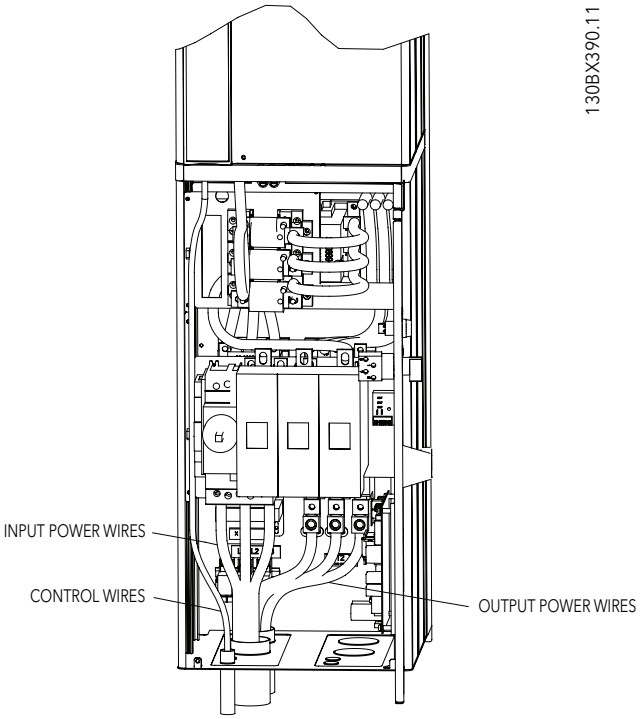

Figure 3.12 C4 Panel

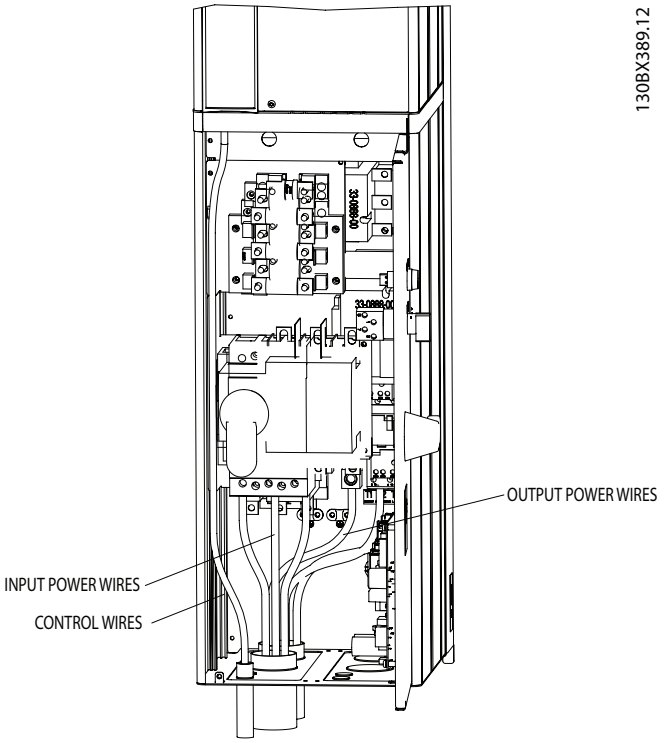

Figure 3.11 C3 Panel

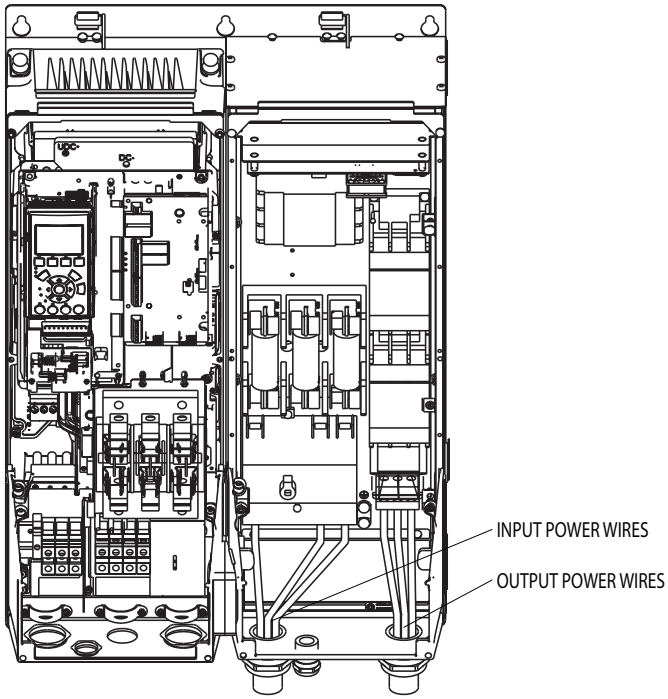

Figure 3.13 Sample Horizontal Panels

3.4.3 Wire Size

⚠WARNING

ELECTROCUTION AND FIRE HAZARDS WITH IMPROPERLY INSTALLED AND GROUNDED FIELD WIRING! Improperly installed and grounded field wiring poses FIRE & ELECTROCUTION hazards. To avoid these hazards, you MUST follow requirements for field wiring installation and grounding as described in the National Electrical Codes (NEC) and your local/state electrical codes. All field wiring MUST be performed by qualified personnel.

Failure to follow these requirements could result in death or serious injury.

NOTE!
Make all power connections with minimum 60 or 75°C/140 or 155°F rated copper wiring for installations in North America.

- Size wiring to the input current of the drive. Recommended wire sizes are provided on the connection drawing inside the cover of the unit.
- Local codes must be complied with for cable sizes.
- Excessively oversizing wires could result in wires too large for terminals.

3.4.4 Wire Type Rating

- Use wiring corresponding to the wiring rating specifications provided.
- The wire rating specifications are located on the tightening torque and wire rating label inside the panel cover (see Table 3-22 for a sample of the torque and wire rating data).

3.4.5 Terminal Tightening Torques

- Tighten all connections to the torque specifications provided in Table 3.15, Table 3.16, Table 3.17, Table 3.18, Table 3.19, Table 3.20, Table 3.21 and Table 3.22.
- The torque specifications are also located on the tightening torque and wire rating label inside the panel cover.

3 x 208V AC						
Frame	**HP (KW)**	**Disconnect Switch (w/o Fuses) UL508A L1, L2, & L3 Torque lb-in (N-m)**	**Disconnect Switch Switch Fusible UL98 L1, L2, & L3 Torque lb-in (N-m)**	**Circuit Breaker L1, L2, & L3 Torque lb-in (N-m)**	**Single Motor Overload T1, T2, & T3 Torque lb-in (N-m)**	**Ground Wire Torque lb-in (N-m)**
B3	7.5 (5.5)	7 (0.8)	30 (3.3)	40 (4.5)	24 (2.7)	40 (4.5)
	10 (7.5)	7 (0.8)	30 (3.3)	40 (4.5)	24 (2.7)	40 (4.5)
	15 (11)	18 (2)	120 (13.5)	45 (5)	50 (5.6)	40 (4.5)
B4	20 (15)	18 (2)	120 (13.5)	50 (5.6)	50 (5.6)	40 (4.5)
C3	25 (18.5)	55 (6.2)	200 (22.5)	50 (5.6)	50 (5.6)	40 (4.5)
	30 (22)	200 (22.5)	200 (22.5)	50 (5.6)	50 (5.6)	40 (4.5)
	40 (30)	200 (22.5)	200 (22.5)	50 (5.6)	275 (31)	40 (4.5)
C4	50 (37)	200 (22.5)	500 (56.5)	274 (31)	275 (31)	40 (4.5)
	60 (45)	200 (22.5)	500 (56.5)	274 (31)	275 (31)	40 (4.5)

Table 3.15 Vertical Bypass Panel Tightening Torque 208V

3 x 230V AC						
Frame	**HP (KW)**	**Disconnect Switch (w/o Fuses) UL508A L1, L2, & L3 Torque lb-in (N-m)**	**Disconnect Switch Switch Fusible UL98 L1, L2, & L3 Torque lb-in (N-m)**	**Circuit Breaker L1, L2, & L3 Torque lb-in (N-m)**	**Single Motor Overload T1, T2, & T3 Torque lb-in (N-m)**	**Ground Wire Torque lb-in (N-m)**
B3	7.5 (5.5)	7 (0.8)	30 (3.3)	40 (4.5)	24 (2.7)	40 (4.5)
	10 (7.5)	7 (0.8)	30 (3.3)	40 (4.5)	24 (2.7)	40 (4.5)
	15 (11)	18 (2)	120 (13.5)	45 (5)	50 (5.6)	40 (4.5)
B4	20 (15)	18 (2)	120 (13.5)	50 (5.6)	50 (5.6)	40 (4.5)
	25 (18.5)	18 (2)	200 (22.5)	50 (5.6)	50 (5.6)	40 (4.5)
C3	30 (22)	55 (6.2)	200 (22.5)	50 (5.6)	50 (5.6)	40 (4.5)
	40 (30)	200 (22.5)	200 (22.5)	50 (5.6)	275 (31)	40 (4.5)
C4	50 (37)	200 (22.5)	200 (22.5)	274 (31)	275 (31)	40 (4.5)
	60 (45)	200 (22.5)	500 (56.5)	274 (31)	275 (31)	40 (4.5)

Table 3.16 Vertical Bypass Panel Tightening Torque 230V

3 x 460V AC						
Frame	**HP (KW)**	**Disconnect Switch (w/o Fuses) UL508A L1, L2, & L3 Torque lb-in (N-m)**	**Disconnect Switch Switch Fusible UL98 L1, L2, & L3 Torque lb-in (N-m)**	**Circuit Breaker L1, L2, & L3 Torque lb-in (N-m)**	**Single Motor Overload T1, T2, & T3 Torque lb-in (N-m)**	**Ground Wire Torque lb-in (N-m)**
B3	15 (11)	7 (0.8)	30 (3.3)	40 (4.5)	24 (2.7)	40 (4.5)
	20 (15)	7 (0.8)	30 (3.3)	40 (4.5)	24 (2.7)	40 (4.5)
	25 (18.5)	7 (0.8)	30 (3.3)	45 (5)	24 (2.7)	40 (4.5)
B4	30 (22)	18 (2)	30 (3.3)	45 (5)	50 (5.6)	40 (4.5)
	40 (30)	18 (2)	120 (13.5)	50 (5.6)	50 (5.6)	40 (4.5)
	50 (37)	18 (2)	120 (13.5)	50 (5.6)	50 (5.6)	40 (4.5)
C3	60 (45)	55 (6.2)	200 (22.5)	50 (5.6)	50 (5.6)	40 (4.5)
	75 (55)	200 (22.5)	200 (22.5)	50 (5.6)	50 (5.6)	40 (4.5)
C4	100 (75)	200 (22.5)	200 (22.5)	274 (31)	275 (31)	40 (4.5)
	125 (90)	200 (22.5)	500 (56.5)	274 (31)	275 (31)	40 (4.5)

Table 3.17 Vertical Bypass Panel Tightening Torque 460V

3 x 600V AC						
Frame	**HP (KW)**	**Disconnect Switch (w/o Fuses) UL508A L1, L2, & L3 Torque lb-in (N-m)**	**Disconnect Switch Switch Fusible UL98 L1, L2, & L3 Torque lb-in (N-m)**	**Circuit Breaker L1, L2, & L3 Torque lb-in (N-m)**	**Single Motor Overload T1, T2, & T3 Torque lb-in (N-m)**	**Ground Wire Torque lb-in (N-m)**
B3	15 (11)	7 (.79)	17 (1.92)	62 (7)	24 (2.7)	40 (4.5)
	20 (15)	7 (.79)	30 (3.3)	62 (7)	24 (2.7)	40 (4.5)
	25 (18.5)	7 (.79)	30 (3.3)	62 (7)	24 (2.7)	40 (4.5)
B4	30 (22)	7 (.79)	30 (3.3)	62 (7)	50 (5.6)	40 (4.5)
	40 (30)	18 (2)	30 (3.3)	62 (7)	50 (5.6)	40 (4.5)
	50 (37)	18 (2)	120 (13.5)	62 (7)	50 (5.6)	40 (4.5)
C3	60 (45)	55 (6.2)	120 (13.5)	62 (7)	50 (5.6)	40 (4.5)
	75 (55)	55 (6.2)	200 (22.5)	62 (7)	50 (5.6)	40 (4.5)
C4	100 (75)	200 (22.5)	200 (22.5)	200 (22.5)	275 (31)	40 (4.5)
	125 (90)	200 (22.5)	200 (22.5)	200 (22.5)	275 (31)	40 (4.5)

Table 3.18 Vertical Bypass Panel Tightening Torque 600V

3 x 208V AC						
Frame	**HP (KW)**	**Disconnect Switch (w/o Fuses) UL508A L1, L2, & L3 Torque lb-in (N-m)**	**Disconnect Switch Switch Fusible UL98 L1, L2, & L3 Torque lb-in (N-m)**	**Circuit Breaker L1, L2, & L3 Torque lb-in (N-m)**	**Single Motor Overload T1, T2, & T3 Torque lb-in (N-m)**	**Ground Wire Torque lb-in (N-m)**
A2, A5	0.5 (0.37)	7 (0.79)	55 (6.21)	62 (7.0)	20 (2.3)	40 (4.5)
	0.75 (0.55)	7 (0.79)	55 (6.21)	62 (7.0)	20 (2.3)	40 (4.5)
	1 (0.75)	7 (0.79)	55 (6.21)	62 (7.0)	20 (2.3)	40 (4.5)
	1.5 (1.1)	7 (0.79)	55 (6.21	62 (7.0)	20 (2.3)	40 (4.5)
	2 (1.5)	7 (0.79)	55 (6.21)	62 (7.0)	20 (2.3)	40 (4.5)
	3 (2.2)	7 (0.79)	55 (6.21)	62 (7.0)	20 (2.3)	40 (4.5)
A3, A5	5 (3.7)	7 (0.79)	55 (6.21)	62 (7.0)	20 (2.3)	40 (4.5)
B1	7.5 (5.5)	7 (0.79)	55 (6.21)	62 (7.0)	20 (2.3)	40 (4.5)
	10 (7.5)	7 (0.79)	55 (6.21)	62 (7.0)	20 (2.3)	40 (4.5)
B2	15 (11)	18 (2.0)	55 (6.21)	62 (7.0)	40 (4.5)	40 (4.5)
	20 (15)	18 (2.0)	55 (6.21)	62 (7.0)	40 (4.5)	40 (4.5)
C1	25 (18.5)	55 (6.21)	70 (7.9)	62 (7.0)	40 (4.5)	40 (4.5)
	30 (22)	70 (7.9)	70 (7.9)	50 (5.6)	40 (4.5)	40 (4.5)
C2	40 (30)	150 (16.9)	150 (16.9)	50 (5.6)	275 (31.0)	40 (4.5)
	50 (37)	150 (16.9)	150 (16.9)	50 (5.6)	275 (31.0)	40 (4.5)
	60 (45)	150 (16.9)	150 (16.9)	50 (5.6)	275 (31.0)	40 (4.5)

Table 3.19 Horizontal Bypass Panel Tightening Torque 208V

3 x 230V AC						
Frame	**HP (KW)**	**Disconnect Switch (w/o Fuses) UL508A L1, L2, & L3 Torque lb-in (N-m)**	**Disconnect Switch Switch Fusible UL98 L1, L2, & L3 Torque lb-in (N-m)**	**Circuit Breaker L1, L2, & L3 Torque lb-in (N-m)**	**Single Motor Overload T1, T2, & T3 Torque lb-in (N-m)**	**Ground Wire Torque lb-in (N-m)**
A2, A5	0.5 (0.37)	7 (0.79)	55 (6.21)	62 (7.0)	20 (2.3)	40 (4.5)
	0.75 (0.55)	7 (0.79)	55 (6.21)	62 (7.0)	20 (2.3)	40 (4.5)
	1 (0.75)	7 (0.79)	55 (6.21)	62 (7.0)	20 (2.3)	40 (4.5)
	1.5 (1.1)	7 (0.79)	55 (6.21)	62 (7.0)	20 (2.3)	40 (4.5)
	2 (1.5)	7 (0.79)	55 (6.21)	62 (7.0)	20 (2.3)	40 (4.5)
	3 (2.2)	7 (0.79)	55 (6.21)	62 (7.0)	20 (2.3)	40 (4.5)
A3, A5	5 (3.7)	7 (0.79)	55 (6.21)	62 (7.0)	20 (2.3)	40 (4.5)
B1	7.5 (5.5)	7 (0.79)	55 (6.21)	62 (7.0)	20 (2.3)	40 (4.5)
	10 (7.5)	7 (0.79)	55 (6.21)	62 (7.0)	20 (2.3)	40 (4.5)
B2	15 (11)	18 (2.0)	55 (6.21)	62 (7.0)	40 (4.5)	40 (4.5)
	20 (15)	18 (2.0)	55 (6.21)	62 (7.0)	40 (4.5)	40 (4.5)
C1	25 (18.5)	55 (6.21)	55 (6.21)	62 (7.0)	40 (4.5)	40 (4.5)
	30 (22)	55 (6.21)	70 (7.9)	62 (7.0)	40 (4.5)	40 (4.5)
C2	40 (30)	150 (16.9)	150 (16.9)	50 (5.6)	275 (31.0)	40 (4.5)
	50 (37)	150 (16.9)	150 (16.9)	50 (5.6)	275 (31.0)	40 (4.5)
	60 (45)	150 (16.9)	150 (16.9)	50 (5.6)	275 (31.0)	40 (4.5)

Table 3.20 Horizontal Bypass Panel Tightening Torque 230V

3 x 460V AC						
Frame	**HP (KW)**	**Disconnect Switch (w/o Fuses) UL508A L1, L2, & L3 Torque lb-in (N-m)**	**Disconnect Switch Switch Fusible UL98 L1, L2, & L3 Torque lb-in (N-m)**	**Circuit Breaker L1, L2, & L3 Torque lb-in (N-m)**	**Single Motor Overload T1, T2, & T3 Torque lb-in (N-m)**	**Ground Wire Torque lb-in (N-m)**
A2,A5	0.5 (0.37)	7 (0.79)	17 (1.9)	62 (7.0)	20 (2.3)	40 (4.5)
	0.75 (0.55)	7 (0.79)	17 (1.9)	62 (7.0)	20 (2.3)	40 (4.5)
	1 (0.75)	7 (0.79)	17 (1.9)	62 (7.0)	20 (2.3)	40 (4.5)
	1.5 (1.1)	7 (0.79)	17 (1.9)	62 (7.0)	20 (2.3)	40 (4.5)
	2 (1.5)	7 (0.79)	17 (1.9)	62 (7.0)	20 (2.3)	40 (4.5)
	3 (2.2)	7 (0.79)	17 (1.9)	62 (7.0)	20 (2.3)	40 (4.5)
	5 (3.7)	7 (0.79)	17 (1.9)	62 (7.0)	20 (2.3)	40 (4.5)
A3-A5	7.5 (5.5)	7 (0.79)	17 (1.9)	62 (7.0)	20 (2.3)	40 (4.5)
	10 (7.5)	7 (0.79)	17 (1.9)	62 (7.0)	20 (2.3)	40 (4.5)
B1	15 (11)	7 (0.79)	17 (1.9)	62 (7.0)	20 (2.3)	40 (4.5)
	20 (15)	7 (0.79)	30 (3.4)	62 (7.0)	20 (2.3)	40 (4.5)
	25 (18.5)	7 (0.79)	30 (3.4)	62 (7.0)	20 (2.3)	40 (4.5)
B2	30 (22)	18 (2.0)	55 (6.21)	62 (7.0)	40 (4.5)	40 (4.5)
	40 (30)	18 (2.0)	55 (6.21)	62 (7.0)	40 (4.5)	40 (4.5)
C1	50 (37)	55 (6.21)	55 (6.21)	62 (7.0)	40 (4.5)	40 (4.5)
	60 (45)	55 (6.21)	70 (7.9)	62 (7.0)	40 (4.5)	40 (4.5)
	75 (55)	70 (7.9)	70 (7.9)	50 (5.6)	40 (4.5)	40 (4.5)
C2	100 (75)	150 (16.9)	150 (16.9)	50 (5.6)	275 (31.0)	40 (4.5)
	125 (90)	150 (16.9)	150 (16.9)	50 (5.6)	275 (31.0)	40 (4.5)
D1	150 (110)	375 (42.4)	375 (42.4)	375 (42.4)	275 (31.0)	40 (4.5)
	200 (132)	375 (42.4)	375 (42.4)	50 (5.6)	200 (22.6)	40 (4.5)
D2	250 (160)	375 (42.4)	375 (42.4)	375 (42.4)	200 (22.6)	40 (4.5)
	300 (200)	375 (42.4)	375 (42.4)	375 (42.4)	275 (31.0)	40 (4.5)
	350 (250)	375 (42.4)	375 (42.4)	375 (42.4)	275 (31.0)	40 (4.5)

Table 3.21 Horizontal Bypass Panel Tightening Torque 460V

3 x 600V AC						
Frame	**HP (KW)**	**Disconnect Switch (w/o Fuses) UL508A L1, L2, & L3 Torque lb-in (N-m)**	**Disconnect Switch Switch Fusible UL98 L1, L2, & L3 Torque lb-in (N-m)**	**Circuit Breaker L1, L2, & L3 Torque lb-in (N-m)**	**Single Motor Overload T1, T2, & T3 Torque lb-in (N-m)**	**Ground Wire Torque lb-in (N-m)**
A2,A5	0.5 (0.37)	7 (0.79)	17 (1.9)	62 (7.0)	20 (2.3)	40 (4.5)
	0.75 (0.55)	7 (0.79)	17 (1.9)	62 (7.0)	20 (2.3)	40 (4.5)
	1 (0.75)	7 (0.79)	17 (1.9)	62 (7.0)	20 (2.3)	40 (4.5)
	1.5 (1.1)	7 (0.79)	17 (1.9)	62 (7.0)	20 (2.3)	40 (4.5)
	2 (1.5)	7 (0.79)	17 (1.9)	62 (7.0)	20 (2.3)	40 (4.5)
	3 (2.2)	7 (0.79)	17 (1.9)	62 (7.0)	20 (2.3)	40 (4.5)
	5 (3.7)	7 (0.79)	17 (1.9)	62 (7.0)	20 (2.3)	40 (4.5)
A3-A5	7.5 (5.5)	7 (0.79)	17 (1.9)	62 (7.0)	20 (2.3)	40 (4.5)
	10 (7.5)	7 (0.79)	17 (1.9)	62 (7.0)	20 (2.3)	40 (4.5)
B1	15 (11)	7 (0.79)	17 (1.9)	62 (7.0)	20 (2.3)	40 (4.5)
	20 (15)	7 (0.79)	30 (3.4)	62 (7.0)	20 (2.3)	40 (4.5)
	25 (18.5)	7 (0.79)	30 (3.4)	62 (7.0)	20 (2.3)	40 (4.5)
B2	30 (22)	7 (0.79)	30 (3.4)	62 (7.0)	20 (2.3)	40 (4.5)
	40 (30)	18 (2.0)	30 (3.4)	62 (7.0)	40 (4.5)	40 (4.5)
C1	50 (37)	55 (6.21)	55 (6.21)	62 (7.0)	40 (4.5)	40 (4.5)
	60 (45)	55 (6.21)	55 (6.21)	62 (7.0)	40 (4.5)	40 (4.5)
	75 (55)	55 (6.21)	55 (6.21)	50 (5.6)	40 (4.5)	40 (4.5)
C2	100 (75)	70 (7.9)	70 (7.9)	50 (5.6)	275 (31.0)	40 (4.5)
	125 (90)	150 (16.9)	150 (16.9)	50 (5.6)	275 (31.0)	40 (4.5)
D1	150 (110)	375 (42.4)	375 (42.4)	375 (42.4)	275 (31.0)	40 (4.5)
	200 (132)	375 (42.4)	375 (42.4)	50 (5.6)	200 (22.6)	40 (4.5)
D2	250 (160)	375 (42.4)	375 (42.4)	375 (42.4)	200 (22.6)	40 (4.5)
	300 (200)	375 (42.4)	375 (42.4)	375 (42.4)	200 (22.6)	40 (4.5)
	350 (250)	375 (42.4)	375 (42.4)	375 (42.4)	275 (31.0)	40 (4.5)
	400 (315)	375 (42.4)	375 (42.4)	375 (42.4)	275 (31.0)	40 (4.5)

Table 3.22 Horizontal Bypass Panel Tightening Torque 600V

See Table 3.23 for a sample of the torque and wire rating data.

Field Connection	Tightening Torque lb-in (N-m)	Temperature & Type Rating
L1, L2, L3/Ground	25 (2.8) 25 (2.8)	Use 75°C Copper Conductor
2T1, 2T2, 2T3/Ground	25 (2.8) 25 (2.8)	Use 75°C Copper Conductor
TB1	25 (2.8) 25 (2.8)	Use 75°C Copper Conductor

Table 3.23 Sample Tightening Torque and Wire Rating Label

3.4.6 Input Line Connection

CAUTION

Run input power, motor wiring and control wiring in three separate metallic conduits or raceways for high frequency noise isolation. Failure to isolate power, motor and control wiring could result in less than optimum drive and associated equipment performance.

- Connect 3-phase AC input power wire to terminals L1, L2, and L3. See the connection drawing inside the cover of the unit.
- Torque terminals in accordance with the information provided in Table 3.15, Table 3.16, Table 3.17, Table 3.18, Table 3.19, Table 3.20, Table 3.21 and Table 3.22 or based on the label inside the panel cover.
- Use with isolated input source. Many utility power systems are referenced to earth ground. Although not as common, the input power may be an isolated source. All drives may be used with an isolated input source as well as with ground reference power lines.

3.4.7 Motor Wiring

⚠WARNING

ELECTROCUTION AND FIRE HAZARDS WITH IMPROPERLY INSTALLED AND GROUNDED FIELD WIRING!

Improperly installed and grounded field wiring poses FIRE & ELECTROCUTION hazards. To avoid these hazards, you MUST follow requirements for field wiring installation and grounding as described in the National Electrical Codes (NEC) and your local/state electrical codes. All field wiring MUST be performed by qualified personnel. Failure to follow these requirements could result in death or serious injury.

⚠WARNING

INDUCED VOLTAGE!
Run output motor cables from multiple drives separately. Induced voltage from output motor cables run together can charge equipment capacitors even with the equipment turned off and locked out. Failure to run output motor cables separately could result in death or serious injury.

NOTE!
Run input power, motor wiring and control wiring in three separate metallic conduits or raceways for high frequency noise isolation. Failure to isolate power, motor and control wiring could result in less than optimum drive and associated equipment performance.

- Connect the 3-phase motor wiring to bypass terminals T1 (U), T2 (V), and T3 (W). See the connection drawing inside the cover of the unit.
- Depending on the configuration of the equipment, motor wiring may be connected to overload or terminal block.
- Torque terminals in accordance with the information provided on the connection diagram inside the cover of the unit.
- Motor wiring should never exceed the following maximum distances: 300m (1000 ft) for unshielded, 150m (500 ft) for shielded.
- Motor wiring should always be as short as practical.

3.4.8 Grounding (Earthing)

⚠WARNING

GROUNDING HAZARD!
for operator safety, it is important to ground the optionpanel properly. Failure to do so could result in death or serious injury.

NOTE!
It is the responsibility of the user or certified electrical installer to ensure correct grounding (earthing) of the equipment in accordance with national and local electrical codes and standards.

- Follow all local and national codes for proper electrical equipment grounding (earthing).
- Correct protective grounding of the equipment must be established. Ground currents are higher than 3 mA.
- A dedicated ground wire is required for input ground.
- Connect the ground wire directly to a reliable earth ground. Grounding studs are provided on the back plate of the panel for grounding.
- Do not use conduit connected to the panel as a replacement for a ground wire.
- A high strand count ground wire is preferred for dissipating high frequency electrical noise.
- Keep the ground wire connections as short as possible.
- Ground the motor to the panel with insulated wire run inside metal conduit with motor leads.

3.4.9 Control Wiring

Detailed instructions for terminal connection, control wiring installation, and operation are shown in section 5 Electronically Controlled Bypass (ECB) Operation.

- It is recommended that control wiring is rated for 600 V for 480 V and 600 V drives, and 300 V for 200-240 V drives.
- Isolate control wiring from high power components in the drive enclosure.
- See section 3.4.2 Wire and Cable Access for details.

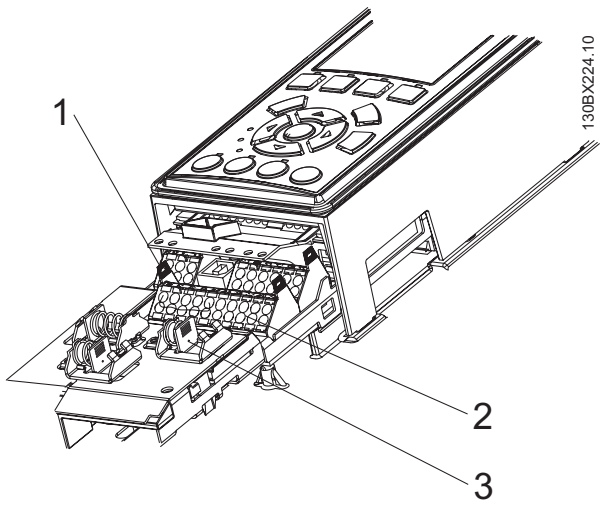

Figure 3.14 Control Terminals Location

1. EIA-485 terminal
2. Control terminals
3. Grounded restraining clips

3.4.10 Serial Communication Bus Connection

The ECB reports serial communication data to host systems through the drive. Connection to the serial communication network is made either through the EIA-485 terminals on the drive (see Figure 3.15) or, for other protocols, terminals located on the communication option card. For option card connection, see the option card instructions provided with the unit.

- For ECB serial communication protocols using the EIA-485 terminals, make connections in the following manner.

NOTE!
It is recommended to use braided-shielded, twisted-pair cables to reduce noise between conductors.

1. Connect signal wires to terminal (+) 68 and terminal (-) 69 on control terminals of drive. (See the drive support materials for wire size and tightening torque.)
2. Terminate shield to grounded restraining clip provided by stripping wire insulation at point of contact.
3. If shielded cabling is used, do not connect the end of the shield to terminal 61.

Programming

Serial communication point maps, parameter settings, and other details for bypass option functionality are included in the serial communication materials supplied with the unit.

3.4.11 Drive Control Terminals

Definitions of the drive terminals are summarized in Table 3.24.

- Connector 1 provides four digital inputs; two selectable digital inputs or outputs, 24 V DC terminal supply voltage, and a common for optional customer supplied 24 V DC voltage.
- Serial communications use EIA-485 connector 2 with terminal 68 (+) and 69 (-).
- Connector 3 provides two analog inputs, one analog output, 10 V DC supply voltage, and commons for the inputs and output.
- A USB port, connector 4, is also available for use with the MCT 10 Set-up Software.
- Also provided are two Form C relay outputs that are in various locations depending upon the drive configuration and size.

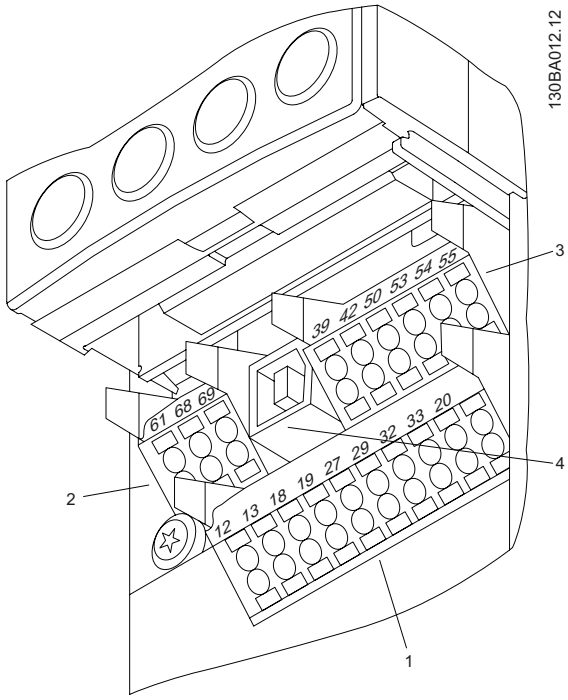

Figure 3.15 Removable Drive Connectors and Terminals

Terminal No.	Function
01, 02, 03, 04, 05, 06	Form-C relay output. Useable for AC or DC voltage and resistive or inductive loads. See drive support materials for details on voltage and current ratings and relay location.
12, 13	24 V DC digital supply voltage. Useable for digital inputs and external transducers. To use the 24 V DC for digital input common, program parameter 5-00 for PNP operation. Maximum output current is 200 mA total for all 24V loads.
18, 19, 32, 33	Digital inputs. Selectable for NPN or PNP function in parameter 5-00. Default is PNP.
27, 29	Digital inputs or outputs. Programmable for either. Parameter 5-01 for terminal 27 and 5-02 for 29 selects input/output function. Default setting is input.
20	Common for digital inputs. To use for digital input common, program parameter 5-00 for NPN operation.
39	Common for analog output.
42	Analog output. Programmable for various functions in parameter 6-5*. The analog signal is 0 to 20 mA or 4 to 20 mA at a maximum of 500 Ω.
50	10 V DC analog supply voltage. 15 mA maximum commonly used for a potentiometer or thermistor.
53, 54	Analog input. Switch A53 is fixed for current (0 or 4-20 mA). Switch A54 is selectable for current (0 or 4-20mA) that requires switching to the right or I position, or voltage (0-10V) that requires switching to the left or U position. Switches are located on the drive control card behind the removable LCP. See drive support materials for details.
55	Common for analog inputs.
61	Common for serial communication. Do not use to terminate shields. See drive support materials for proper shield termination.
68 (+), 69 (-)	RS-485 interface. When the drive is connected to an RS-485 serial communication bus, a drive control card switch is provided for termination resistance. ON for termination and OFF for no termination. See drive support materials for details.

Table 3.24 Drive Control Terminals Functions

4 Start Up

1. Input power to the unit must be OFF and locked out per OSHA requirements. Do not rely on panel disconnect switches.

⚠WARNING

HIGH VOLTAGE!
if input and output connections have been connected improperly, there is potential for high voltage on these terminals. If power leads for multiple motors are improperly run in same conduit, there is potential for leakage current to charge capacitors within the panel, even when disconnected from line input. For initial start up, make no assumptions about power components. Follow pre-start procedures described below. Failure to do so could result in death, serious injury or damage to equipment.

2. Use AC voltmeter to verify there is no voltage on input terminals L1, L2, and L3, phase-to-phase and phase-to-ground, and output terminals T1, T2, and T3, phase-to-phase and phase-to-ground.
3. Use ohmmeter to confirm continuity of the motor by measuring T1-T2, T2-T3, and T3-T1.
4. Use ohmmeter to confirm open on input by measuring L1-L2, L2-L3, and L3-L1. Note that if an isolation transformer is between the power source and panel, continuity will be present. In this case, visually confirm that motor and power leads are not reversed.
5. Inspect the panel for loose connections on terminals.
6. See section 3.4.3 Wire Size for proper ground wire: panel to main building distribution ground, and panel to motor ground.
7. Confirm control connections terminated per connection diagrams supplied with the equipment.
8. Check for external devices between drive panel output and motor. It is recommended that no devices be installed between the motor and drive.
9. Record motor nameplate data; hp, voltage, full load amps (FLA), and RPM. It will be needed to match motor and drive later on.
10. Confirm that incoming power voltage matches drive label voltage and motor nameplate voltage.
11. For multiple winding motors, the motor must be wired on run winding, not start winding.

CAUTION
EQUIPMENT DAMAGE!
if motor FLA (full load amperage) is greater than unit maximum amps, drive and panel must be replaced with one of appropriate rating. Do not attempt to run the unit. Failure to match FLA to unit maximum amp rating may result in equipment damage.

12. Confirm motor FLA is equal to or less than maximum panel output current. Some motors have higher than normal NEMA currents.
13. Check that the overload relay is set for FLA of connected motor. Service factor is built into overload relay. Relay trips at 120% of setting.
14. For drive start up procedures, see drive instruction manual.

4.1.1 Inspection Prior to Start Up

Before applying power to the unit, inspect the entire installation as detailed in Table 4.1.

Inspect For	Description
Auxiliary equipment	Look for auxiliary equipment, switches, disconnects, or input fuses/circuit breakers that may reside on input power side of drive or output side to motor. Examine their operational readiness and ensure they are ready in all respects for operation at full speed. Check function and installation of pressure sensors or encoders (etc.) used for feedback to drive. Remove power factor correction caps on motor, if present.
Cable routing	Ensure that input power, motor wiring, and control wiring are in three separate metallic conduits for high frequency noise isolation. Failure to isolate power, motor, and control wiring could result in less than optimum drive and associated equipment performance.
Control wiring	Check for broken or damaged wires and connections. Check the voltage source of the signals, if necessary. The use of shielded cable or twisted pair is recommended for serial communication. Ensure the shield is terminated correctly.
Environmental conditions	See panel label for the maximum ambient operating temperature. Humidity levels must be less than 95% noncondensing. Attitude less than 3300 feet (1000 m).
Fusing and circuit	Check that all fuses are inserted firmly and in operational condition and that all circuit breakers are in the open
breakers	position.
Grounding	The panel requires a dedicated ground wire from its chassis to the building ground. It is required that the motor be grounded to the panel chassis. The use of conduit or mounting of the panel to a metal surface is not considered a suitable ground. Check for good ground connections that are tight and free of oxidation. Run insulated motor ground wire back to panel in conduit with motor wires.
Input and output power wiring	Check for loose connections. Check for proper fusing or circuit breakers.
Panel interior	Panel interior must be free of dirt, metal chips, moisture, and corrosion. Check for harmful airborne contaminates such as sulfur based compounds.
Proper Cooling Clearance	Panels require top and bottom clearance adequate to ensure proper air flow for cooling. See Figure 3.2 and Figure 3.3
Switches	Ensure that all switch and disconnect settings are in the proper position.
Vibration	Look for any unusual amount of vibration the equipment may be subjected to when mounting panel.

Table 4.1 Inspection prior to Startup

4.1.2 Start Up Procedure

In the following procedures, changing the equipment between drive mode and bypass mode is required. The ECB uses pushbuttons on the drive keypad for changing modes. Be familiar with the operation of these devices prior to start up.

⚠WARNING

EQUIPMENT HAZARD!

The panel contains dangerous voltages when connected to line voltage. Installation, start-up and maintenance should be performed only by qualified personnel. Failure to perform installation, start-up and maintenance by qualified personnel only could result in death or serious injury.

1. Perform pre-startup procedure.
2. Ensure that the main disconnect switch on the front of the bypass panel is in the OFF position. The panel door should be closed.
3. Keep main disconnect switch in the OFF position and apply voltage to the panel.
4. Confirm that input line voltage is balanced within 3%. If not, correct the input voltage imbalance before proceeding.

CAUTION

MOTOR START!

Ensure that motor, system, and any attached equipment is ready for start. Failure to do so could result in personal injury or equipment damage.

5. Apply power by turning the main disconnect switch to the ON position and select "Drive" mode (see section 5.1.3 ECB Drive or Bypass Selection).
6. Enter drive programming data per the drive instruction manual.
7. Check motor rotation direction in drive control as follows.
   - 7a Put panel in drive mode.
   - 7b Hand start drive at minimum speed (see drive instruction manual for details).
   - 7c Confirm directional rotation.
   - 7d If incorrect, stop the drive, remove power, and lock out.
   - 7e Reverse connection of T1 & T2 motor leads. Do not change incoming power leads.
   - 7f Remove lockout and apply power.
   - 7g Confirm directional rotation.

8. Check motor rotation direction in bypass as follows.
   - 8a Momentarily bump motor in bypass.
   - 8b Confirm directional rotation.
   - 8c If incorrect, stop drive, remove power, and lock out.
   - 8d Reverse connection of L1 & L2 input power leads to the main disconnect. Do not change motor leads.
   - 8e Confirm directional rotation.

CAUTION
FULL SPEED OPERATION!
Ensure that the motor, system, and any attached equipment is ready for full speed operation. The user assumes all responsibility for assuring the system is able to safely run at full speed. Failure to ensure that the motor, system, and any attached equipment is ready for full speed operation could result in equipment damage.

9. Check motor current in drive mode on the motor terminals.
   - 9a Put the unit in drive mode.
   - 9b Check motor current on motor terminals T1, T2, and T3. Verify the motor amps are within drive and motor rated current and are balanced within 3%. If incorrect, see 7.1 Start Up Troubleshooting for isolation procedures.
   - 9c Check input current on input terminals L1, L2, and L3. Verify that current is within FLA of drive and balanced within 3%. If incorrect, see 7.1 Start Up Trouble- shooting for isolation procedures.
10. Check motor current in bypass mode on the motor terminals.
    - 10a Put the unit in bypass mode.
    - 10b Check full load amps on terminals T1, T2, and T3. Verify the motor amps are within motor FLA rated current and balanced within 3%. If incorrect, see 7.1 Start Up Trouble-shooting for isolation procedures.

For steps 11-13, see 6 Electronically Controlled Bypass (ECB) Operation for details.

11. Check operation of any optional functions to confirm that they work, as applicable. Options may include run permissive, fire mode, common start/stop, or others.
12. Exercise the safety circuit and verify that the unit stops running.
13. Exercise the start/stop circuit and verify that the unit starts and stops with the system in the Auto mode of operation.

5 Electronically Controlled Bypass (ECB) Operation

5.1 Electronically Controlled Bypass (ECB) Operation

5.1.1 Overview

Information provided in this section is intended to enable the user to connect control wiring, program functions, and operate the ECB and its optional features.

The ECB contains a local processor located on the ECB control card, which interacts with the drive's control logic for programmable options, remote command input, and output status reporting. Rather than panel-mounted operator-activated selector switches, as on the electrome- chanical option panel, ECB control is provided by the drive's processor.

The ECB also contains a power supply which provides back up for the drive's logic circuitry, so even if the drive loses power, the control and communication functions are maintained.

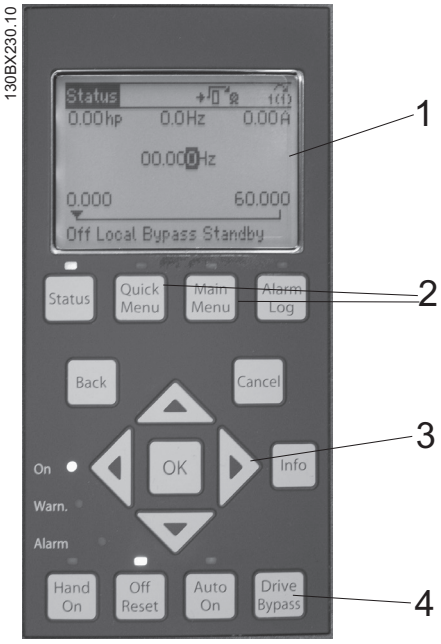

Figure 5.1 Local Control Panel (LCP)

1. LCP Display
2. Menu keys
3. Menu navigation
4. Control keys

Programming and display are provided by the drive's local control panel. (LCP See Figure 5.1)

An important feature of the ECB is the ability to accept commands from a building automation system (BAS) and to report operational status in return.

Control wiring connections are made to either the drive's control terminals (see Figure 3.15) or terminals provided on the ECB control card (see Figure 5.2). Drive analog and digital I/O terminals are multifunctional and need to be programmed for their intended use while the terminals on the ECB control card are dedicated for specific functions.

Programming options for drive terminals are seen by pressing the [Main Menu] key or [Quick Menu] key on the LCP keypad. Parameter menus appear in the LCP display. The arrow keys are used for navigating through the parameter lists. Terminal functions are programmed in parameter group 5-**. (See Table 5.1 for factory default parameter settings for drives with an ECB.) Bypass functions are programmed in parameter group 31-** (see Table 5.4). See the drive's supporting materials for detailed programming instructions.

Parameter	Parameter name	Setting title	Setting	Function
5-01	Term 27 Mode	Input	0	Customer Interlock
5-02	Term 29 Mode	Output	1	Auto bypass
5-10	Term 18 digital input	Start	8	Common run/ stop
5-11	Term 19 digital input	Run Permissive	52	Run Permissive
5-12	Term 27 digital input	External Interlock	7	Customer Interlock
5-31	Term 29 digital output	No Alarm	160	Auto bypass
5-40(0)	Relay 1 function	Start Command Active	167	Run Permissive
5-40(0)	Relay 1 off delay	Off Delay	0.00 S	Run Permissive

Table 5.1 Parameter Group 5- Factory Default Settings**

5.1.2 ECB Control Card

The ECB control card (see Figure 5.2) provides input connector X57 for commanding bypass operation remotely and output connector X59 for reporting the bypass mode of operation, either drive mode or running in bypass.

See Table 5.2 for ECB control card terminal types and functions.

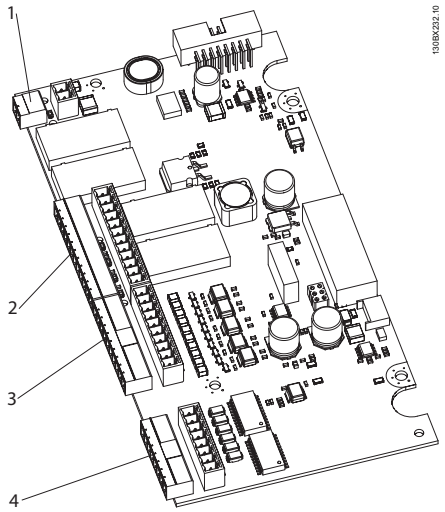

1. Terminal X58
2. Terminal X56
3. Terminal X57
4. Terminal X59

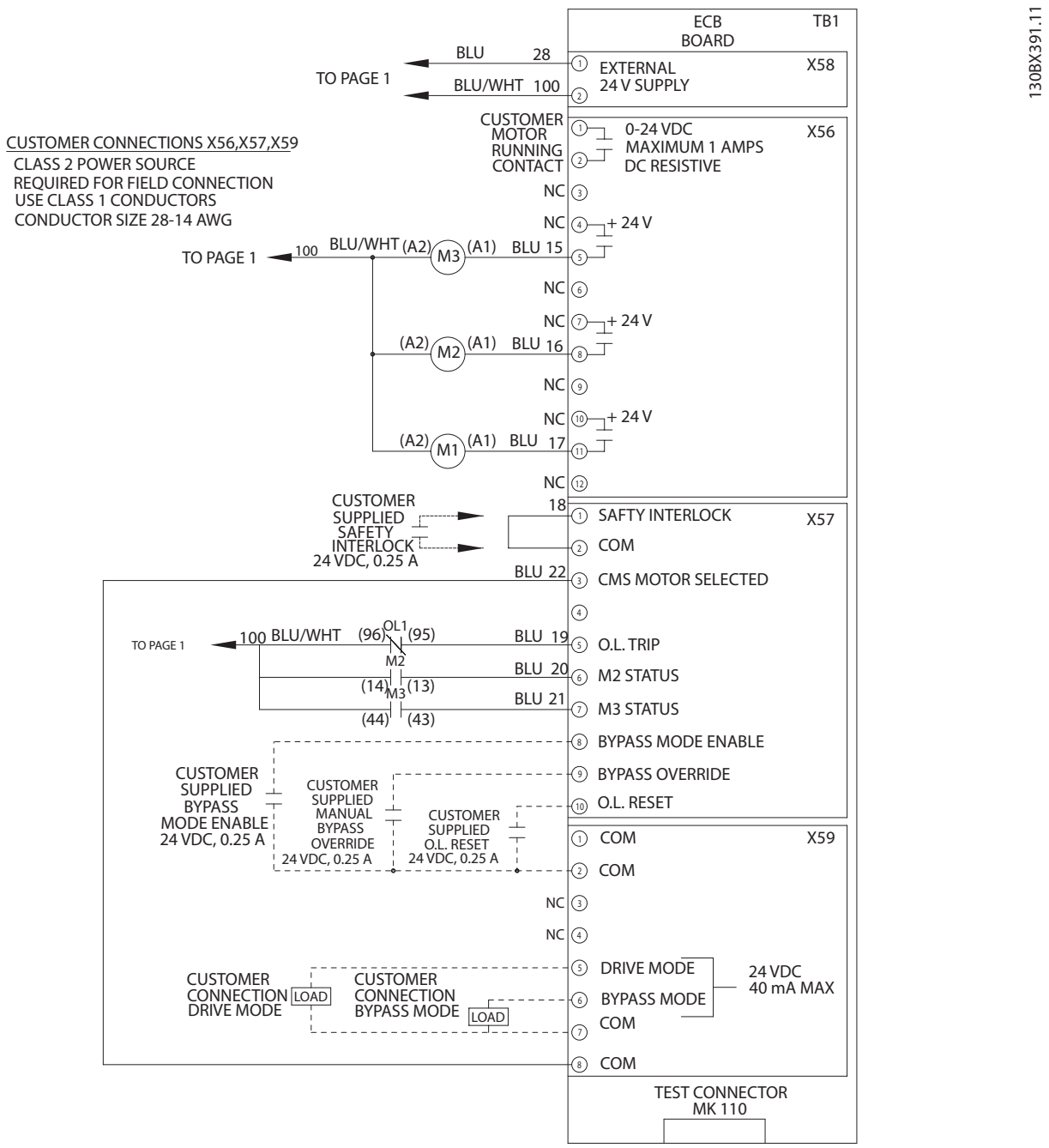

Figure 5.2 ECB Control Card Terminal Connections

Input Conn.	Term.	Function	Type
X57	1	Digital input for safety stop	User supplied dry contact
	2	Common	User supplied dry contact
	3	Factory use only	
	4	No function	
	5	Factory use only	
	6	Factory use only	
	7	Factory use only	
	8	Digital input for remote bypass enable	User supplied dry contact
	9	Digital input overrides system to Bypass Mode ignoring all other inputs and commands, except for safety stop on terminal 1.	User supplied dry contact
	10	Digital input for remote	User supplied dry contact overload reset
X59	1	Common for binary I/O	
	2	Common for binary I/O	
	3	No function	
	4	No function	
	5	Digital output indicates panel is in Drive Mode.	24 VDC digital output
	6	Digital output indicates panel is in Bypass Mode.	24 VDC digital output
	7	Common for binary I/O	
	8	Common for binary I/O	Relay Output Term. Function
X56	1	N.O. contact for running in bypass or drive	Relay output for user
	2	N.O. contact for running in bypass or drive	Relay output for user
	3-12	Factory use only	

Table 5.2 ECB Card Terminals

5.1.3 ECB Drive or Bypass Selection

Use the LCP and display to switch between the motor running in drive mode or bypass when operating in local control. The display in operating mode is shown below.

1. Press [Drive Bypass]. Display changes to show bypass and drive mode options (shown in Step 2).

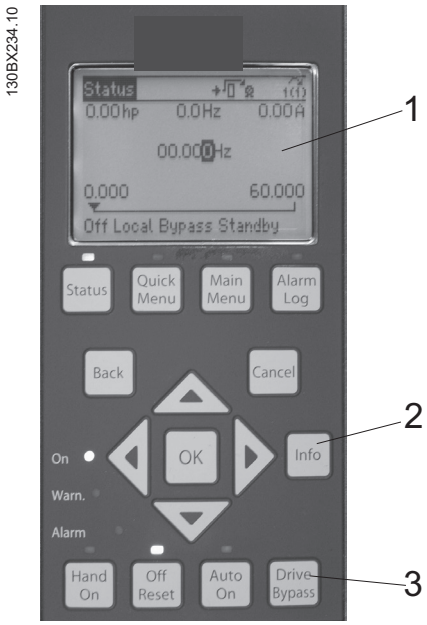

1 = Display
2 = Info Key
3 = Drive/Bypass Option Key

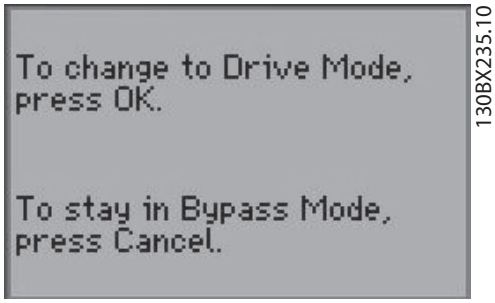

2. When running in drive mode, press [OK] on LCP to activate bypass mode or press CANCEL to remain in drive mode. In bypass, the motor will run at full speed.

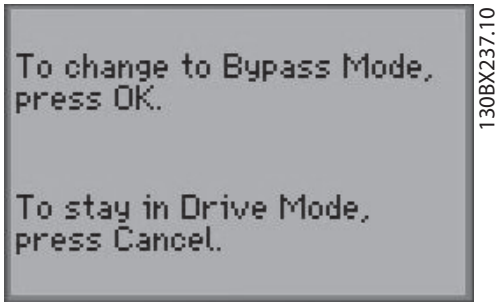

3. When running in drive mode, press [OK] on the LCP to activate drive mode or press [Cancel] to remain in bypass mode.

4. Press [Status] to return to drive status display.

NOTE!
Pressing [Info] at any time displays tips and guidelines for performing the function currently activated.

5.1.4 ECB Programming

Use the LCP and display for programming ECB functional options. All programming options appear in numbered parameters. Parameters are arranged in groups by related functions. Programming is performed by accessing the parameters through a menu and selecting from displayed options or entering numerical values. See the drives' supporting materials for detailed programming instructions.

Access parameters to program bypass functions in accordance with the following instructions:

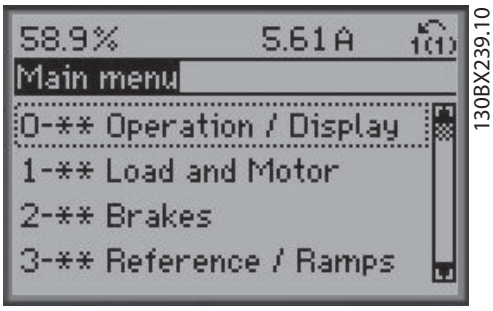

1. Press [Main Menu] on the LCP to access parameter groups. (Note that the memory function of the menu returns to the most recently used function. Use [Back] to return to the main menu index when necessary.)

2. Press [▲] or [▼] to scroll through parameter groups. A dotted outline surrounds the selected group. Bypass options are found in parameter group 31-** Bypass.
3. Press [OK] to enter the selected parameter group.
4. Press [▲] or [▼] to scroll through the parameter list.
5. Press [OK] again to enter programming mode, which allows changing parameter options or data. Option is inverse highlighted.

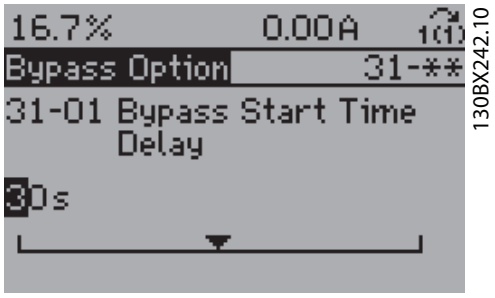

6. Press [▲] or [▼] to scroll through programmable options.
7. Press [OK] again to activate the selection or [Cancel] to cancel.
8. For entering numeric values, press [▶] or [◀] to select numeric digit, then Press [▲] or [▼] to scroll through digit numbers 0-9. Selected digit is inverse highlighted.
9. Press [OK] to activate the selection or [Cancel] to cancel.
10. Press [Status] to return to operational display data or [Back] to return to parameter menu options.

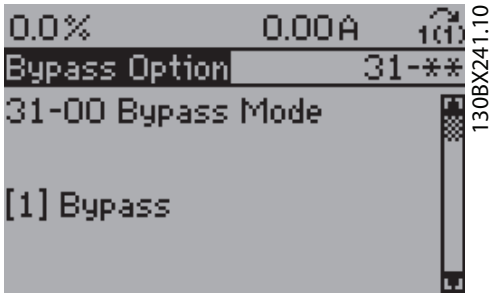

5.1.5 ECB Hand/OFF/Auto

General Information

The [Hand on], [Off Reset], and [Auto on] keys on the LCP control both the drive and bypass (see Figure 5.1). [Drive Bypass] allows the user to locally select drive or bypass mode of operation. It does not necessarily start or stop the motor.

Prior to Enabling Hand/Off/Auto

- Complete the start-up procedure to verify that motor rotation direction in bypass is correct and that the system is ready in all respects for continuous full speed operation in bypass.

Programming Key Functions

For [Off Reset] and [Drive Bypass], Table 5.3 lists the parameters that select functions for the control keys. A password protection can also be assigned in these parameters.

Operation

- [Hand on] allows the user to start the motor locally from the LCP. Press the [Hand on] to start the motor locally either in drive or bypass mode.
- [Off Reset] allows the user to stop the motor locally from the LCP. Press the [Off Reset] to stop the motor locally, either in drive or bypass mode.
- [Auto on] allows the motor to be started remotely from digital input or serial communications. Press [Auto on] to activate the remote motor start and stop from a digital input or serial communications in drive or bypass mode.
- Press [Drive Bypass] to initiate the display to toggle between drive or bypass mode of operation. Press [OK] to accept the change or [Cancel] to cancel the action.

Parameter No.	Key	Function
00-44	[Off Reset]	This disables or enables the [Off Reset] key on LCP. (0) disabled, (1) enabled, (2) password Default value is (1) enabled.
00-45	[Drive Bypass]	This disables or enables the [Drive Bypass] key on LCP. (0) disabled, (1) enabled, (2) password Default value is (1) enabled.

Table 5.3 LCP Control Keys Programming

5.1.6 ECB Mode of Operation

General Information

The ECB has four modes of operation: drive, bypass, auto bypass, and test. Each mode is selected through the LCP and display. Bypass mode select can be accessed directly by pressing [Drive Bypass].

Prior to Enabling Mode of Operation

- Complete the start-up procedure and verify motor rotation direction in bypass is correct and that the system is ready in all respects for continuous full speed operation in bypass.
- Press [Off Reset] to prevent operation of the motor.

Operation

- **Drive mode:** The motor is connected to and controlled by the drive. Contactors M1 and M2 are closed while contactor M3 is open. The motor will not run until a run command is present.
- **Bypass mode:** The motor operates at full speed across the line when a run command is present. Contactor M3 is closed and M1 and M2 are open.

- **Test mode:** Test mode puts the panel into bypass mode and will automatically run in bypass. Contactor M1 is closed, supplying power to the drive for test purposes while M2 is open. Contactor M3 controls the operation of the motor in bypass, closed to run the motor, open to remove power. The control keys on the LCP will not control the bypass until test mode is removed.
- **Auto bypass mode:** When in drive mode, auto bypass is a timed interval that allows a fault condition in the drive to activate running the motor in bypass without operator intervention.

Mode of Operation Select

- Mode of operation is programmed through parameter group 31-** . See Table 5.4.

Par. No.	Selection	Function
31-00	Bypass Mode	Selects source of motor power.
		(0) Drive (drive mode) (1) Bypass (bypass mode)
31-01	Bypass Start Time Delay	Sets a delay time for starting in bypass that allows for external actions to take place prior to line starting the motor.
		0-60 sec. (default value is 5 sec.)
31-02	Bypass Trip Time Delay	Setting a value other than 0 sec. enables auto bypass. Bypass trip delay sets the delay time before switching to bypass mode when the drive has a fault.
		0-300 sec. (default is 0 sec. = OFF)
31-03	Test Mode Activation	Setting enabled puts bypass in test mode. See the manual for warnings and cautions.
		(0) disabled (default value) (1) enabled
31-10	Bypass Status Word	Read-only display, which shows the bypass status in hex. See the next table for details.
		0, 216-1 (default value is 0)
31-11	Bypass Running Hours	Read only display which shows bypass running hours.

Table 5.4 Bypass Parameter Functions

Bit	Description
0	**Test Mode** The Test Mode bit will be true when the ECB is in Test Mode.
1	**Drive Mode** The Drive Mode bit will be true when the ECB is in Drive Mode.
2	**Automatic Bypass Mode** The Automatic Bypass Mode bit will be true when the ECB is in Automatic Bypass Mode.
3	**Bypass Mode** The Bypass Mode bit will be true when the ECB is in Bypass Mode.
4	**Reserved** This bit is reserved for future use.
5	**Motor Running from Bypass/Drive** The Motor Running from Bypass/Drive Bit will be true when the motor is running from either the drive or the bypass.
6	**Overload Trip** The Overload Trip Bit will be true when the ECB detects an overload trip.
7	**M2 Contactor Fault** The Contactor Fault Bit will be true when an M2 Contactor Fault is detected.
8	**M3 Contactor Fault** The Contactor Fault Bit will be true when an M3 Contactor Fault is detected.
9	**External Interlock** The External Interlock Bit will be true when an External Interlock fault is detected.
10	**Manual Bypass Override** The Manual Bypass Override Bit will be true when the Manual Bypass Override input is true.

Table 5.5 Parameter 31-10 Bypass Status Word Bit Definitions

5.1.7 Bypass Status Word Bit Examples

1. Motor running and bypass in drive mode. Status word 22 hexadecimal converts to 00000100010 binary.

Bit	10	9	8	7	6	5	4	3	2	1	0
Binary	0	0	0	0	0	1	0	0	0	1	0

1. External interlock fault (open) and bypass in bypass mode. Status word 208 hexadecimal converts to 01000001000 binary.

Bit	10	9	8	7	6	5	4	3	2	1	0
Binary	0	1	0	0	0	0	0	1	0	0	0

5.1.8 ECB Auto Bypass

General Information

Auto bypass allows a fault condition in the drive to activate running the motor in bypass without operator intervention. Activation of the function is through setting timer start parameters in the drive programming. Fault trip and running in bypass are reported through the drive display, digital outputs, and serial communications. In addition, the independently powered ECB card is available to report bypass status when the drive is inoperable (control card operative) through its serial communications or digital outputs.

Prior to Enabling Auto Bypass

- Complete the start-up procedure to verify motor rotation direction in bypass is correct and that the system is ready in all respects for continuous full speed operation in bypass.

Operation

- With the auto bypass function enabled, a fault signal from the drive activates the auto bypass timer.
- If the fault clears before the time delay is complete, the motor remains operating in drive mode. This allows temporary faults, such as a momentary under or over voltage, to clear without transferring the system to bypass.
- If the timer completes its cycle before the fault clears, the panel trips into bypass mode and the motor runs at constant full speed from line input voltage.
- In bypass, the motor will stop:

  - if the drive receives a remote stop command
  - local stop ([Off]) on the LCP is pressed
  - a remote start command is removed
  - a safety is open
  - motor overload is tripped
- Once auto bypass is activated, the only way to reset the unit back to drive mode is by operator intervention. Ensure that the fault has been cleared, then press [Drive Bypass] and select drive mode.

Auto Bypass Function Setup

Enable auto bypass by changing parameters in group 31 in the drive extended menu.

- 31-01, Bypass start time delay. Setting the timer at anything other than 0 time activates start delay in bypass. Leave at 30 sec. default or set as desired up to 60 sec.
- 31-02, Bypass trip time delay. Setting the timer at anything other than 0 time activates auto bypass. Leave at 5 sec. default or set as desired up to 60 sec.

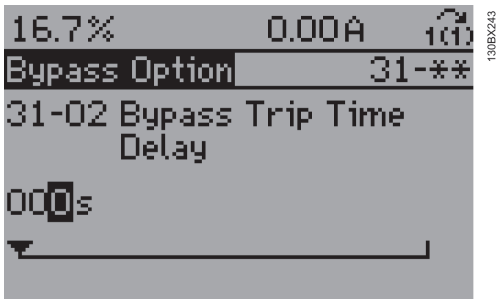

Figure 5.3 Bypass Trip Time Delay

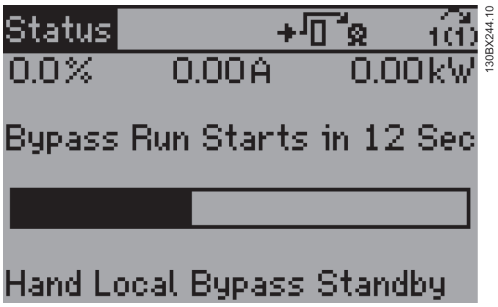

Figure 5.4 Drive Display with Bypass Start Time Delay Active

5.1.9 ECB Run Permissive

General Information

With run permissive active, the drive sends a run request and waits for a remote response before notifying the motor to start. The response indicates the system is safe to operate. Run permissive operates from the LCP hand/off/ auto select in drive or bypass mode. Run permissive is enabled by programming in the drive parameters.

Prior to Enabling Run Permissive

- Complete the start-up procedure to verify motor rotation direction in bypass is correct and that the system is ready in all respects for continuous full speed operation in bypass.
- Verify that the drive is programmed for the run permissive function. See the drive support materials for programming the run permissive function.

Operation

- A start command can be initiated from local hand start, serial communications, or a remote auto start signal through digital drive input terminals.
- In response to the start command, an output request is sent from the programmable drive relay to the external equipment (to activate a valve or damper, for example).
- When a return run signal on the digital input is received, the motor is started in either drive or bypass, depending upon which mode is active.

Run Permissive Function Setup

- See the drive manual or support materials for programming and wiring to the drive control terminals.
- Wire the output run request to the drive output terminals selected, and program the terminals for run request.
- Wire the input run command to the drive input terminals selected, and program the terminals for run permissive.

Disable Run Permissive

- Disable run permissive through the drive parameters and terminal programming.

5.1.10 ECB Overload

General Information

An overload device provides overcurrent protection for the motor when running in bypass. The thermally activated overload monitors motor current and trips to remove power to the motor if a sustained overcurrent condition exists. A Class 20 overload is standard with a variable setting for motor current. Test and reset buttons are also provided. In drive mode, the drive provides current sensing and trip protection. Fuses provide quick action for high over current conditions.

Prior to Enabling Overload

- Verify that the overload current dial setting matches the motor FLA rating on the motor nameplate.
- If the motor FLA is greater or less than the range of the current dial, reconfirm that the motor HP and voltage are within the option panel (and drive) rating. If greater than the FLA rating, replace the panel with one of a proper rating.

CAUTION
MOTOR DAMAGE!
Repeated attempts to reset overload can cause motor damage. Correct the overload condition and let the overload and motor return to normal operating temperature before resetting. See motor manufacturer's recommendations for time between start attempts. Failure to correct the overload condition and let the motor return to normal operating temperature could cause motor damage.

Operation

Overloads and motors are both rated by class. The class is defined by the NEC to determine the maximum time to trip. A Class 20 overload, for example, has a typical trip delay of 20 sec. or less at 600% current and normal operating temperature. This allows for high motor inrush current for 20 sec. while the motor is ramping up to synchronous speed. The trip time, however, is based on the percentage of overload. The higher the overload, the shorter the time.

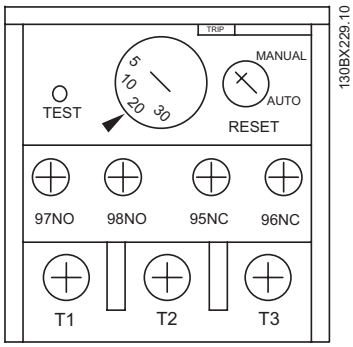

Figure 5.5 Sample Overload Device

Overload Function Setup

- Set the overload current dial to the FLA of the motor. DO NOT add the service factor of the motor into the setting. A service factor of 1.2 x FLA is designed into the overload.
- Pressing the test pushbutton verifies the operation of the overload. The overload should trip when pressed. Use the reset pushbutton to reset the overload after testing.
- Reset is used to reset the overload after it trips. If the overload is still hot, wait until the motor reaches normal operating temperature before resetting. The overload offers a manual (hand) or auto reset selection. It is highly recommended to operate in the manual factory setting to prevent the risk of damage to the motor.

5.1.11 ECB Safety Interlock

General Information

The safety interlock feature prevents the drive or bypass from operating. Only a fire mode command to run overrides this function. For operation in drive or bypass mode, the safety external interlock input contact must be closed. External inputs include, but are not limited to, high and low pressure limit switches, fire alarm, smoke alarm, high and low temperature switches, and vibration sensors.

Operation

When an external safety input closes on ECB terminals 1 and 2 on connector X57, the option panel is in operational mode. When open, power to the motor is disabled. The bypass ignores all run commands except for fire mode operation, when applicable. The drive display indicates alarm 221, bypass interlock, meaning the problem is external to the drive. A factory installed jumper between X57 terminals 1 and 2 allows the unit to operate when no safety input is connected. This jumper must be removed when connecting in a safety interlock circuit.

Safety Interlock Function Setup

- Remove factory-installed jumper between ECB connector X57 terminals 1 and 2 on drive control terminals.
- Wire safety input to connector X57 terminals 1 and 2.
- For technicians familiar with connecting to drive terminals 12 and 27 for safety interlock, be aware that ECB bypass operation will NOT stop with the external fault report. Use terminals 1 and 2 on connector X57, as indicated, for bypass control.

5.1.12 ECB Common Run/Stop

General Information

The common run/stop function provides remote run and stop control of the motor while in either drive or bypass. Without common run/stop, the motor would automatically run at full speed whenever the bypass is activated. The remote signal provides drive control as well as bypass control, making this one input common to both. Common run/stop is enabled by factory default. When used with the run permissive function, common run/stop permits run request operation in bypass.

Operation

A user supplied remote run command wired to drive terminals 13 and 18 initiates remote drive or bypass operation. Common run/stop can also be activated by hand on the LCP or through serial communication. Operation in either drive or bypass is determined by drive or bypass mode selection, not the run/stop command.

Prior to Enabling Common Run/Stop

- Complete the start-up procedure to verify motor rotation direction in bypass is correct and that the system is ready in all respects for continuous full speed operation in bypass.

Common Run/Stop Setup

- Wire a remote run/stop to drive input terminals 13 and 18 (default run input). Ensure that parameter 18 is programmed for run (default setting).

5.1.13 ECB Advanced Fire Mode

General Information

Drive operation in advanced fire mode is programmable. In the event the drive does not function, the motor is operated in bypass at full speed. Fire mode is intended to ignore common safety and overload inputs in emergency situations. The fire mode function is built-in. See the drive support materials for programmable options.

Prior to Enabling Fire Mode

- Complete the start-up procedure to verify motor rotation direction in bypass is correct and that the system is ready in all respects for continuous full speed operation in bypass.
- Verify that the drive is programmed for the fire mode function. See the drive support materials for programming the fire mode function.

Operation

- Activation of fire mode is accomplished by programming the drive for fire mode.
- When activated, the ECB ignores safety circuits and motor overload.
- Fire mode is deactivated only when the command is removed or the unit fails.
- Fire mode status can be reported through serial communications or drive output.

Fire Mode Function Setup

- Program drive for fire mode.
- If required, program a drive output for fire mode status.
- See the drive support materials for programming the fire mode function.

5.1.14 ECB Fault Reporting

General Information

The ECB monitors bypass contactors M2 and M3 and reports failures to the drive for display and external reporting. The drive also monitors the ECB card for bypass communication errors.

Operation

ECB detected faults are reported by the drive in three ways: Warnings and alarms are displayed on the keypad display, through serial communication, or through output relays. The drive provides a form-C fault relay on terminals 01, 02, and 03. The fault contacts are fail-safe, meaning that if power is removed the contacts close and a fault condition is reported.

The drive monitors the ECB card communication and detects when communication stops. An ECB card failure or communication error could cause this. Contact Xylem using the phone number on the back of this manual for technical support if this happens. The phone number can also be found on the label inside the panel cover.

Fault Reporting Function Setup

- Automatic function. No set up required.

6 Start Up Troubleshooting

6.1.1 Option Panel Alarm and Warnings

Code Number	Title	Definition
220	Overload Trip	Motor overload has tripped. Indicates excess motor load. Check motor and driven load. To reset, press [Off Reset]. Then, to restart the system, press [Auto on] or [Hand on].
221	Bypass Interlock	Bypass interlock has opened and caused the motor to stop. Correct the problem. Depending on the setting of parameter 14-20, the system will either automatically reset this alarm or require the [Off Reset] key to be pressed.
222	M2 Open Failed	ECB: The contactor that connects the drive to the motor failed to open. The motor can not be operated.
223	M2 Close Failed	ECB: The contactor that connects the drive to the motor failed to close. The motor can not be operated.
224	M3 Open Failed	ECB: The contactor that connects the motor to the power line has failed to open.
226	M3 Close Failed	ECB: The contactor that connects the motor to the power line has failed to close. The motor can not be operated.
227	Bypass Com Error	Communication between the main control card and the bypass option has been lost. Motor control lost. It will be possible to run the motor using Manual Bypass Override.
228	APU Low Voltage	The Panel Power Supply has failed, or there is a power problem.
229	Motor Disconn.	Terminal 3 on connector X57 of the ECB control card shows an open. This generally means that neither motor has been selected in contactor motor select. Select a motor.

Table 6.1 Panel Alarms and Warnings (ECB only)

DisplayText	Definition
Bypass Run Starts in:	Indicates the number of sec. until the motor will be started in bypass. This time delay can be adjusted using parameter 31-01.
Bypass Activates in:	Indicates the number of sec. left until the system automatically activates Bypass Mode. Time delay can be adjusted using parameter 31-02.

Table 6.2 Panel Status Display

Symptom	Possible cause	Test	Solution
No function	Missing input power	See startup guide for voltage checks.	Correct voltage at source.
	Missing or open fuses or circuit breaker tripped	See open fuses and tripped circuit breaker in this section for possible causes.	Reset circuit breaker. If fuses, check for opens with power removed from panel.
	Loose connections in panel	Perform pre-startup check for loose connections.	Tighten loose connections in the panel.
	Missing customer connections	Missing customer connections can cause the safety circuit or start signal to be open.	See customer connections and make sure all applicable connections are made or jumpers installed, especially customer interlock.
	Loose customer connections	Check all customer connections for tightness. Loose customer connections can act like an open circuit.	Tighten loose customer connections.
	Customer wires incorrectly terminated	See customer connection drawing and make sure wires are connected to correct terminals.	Correct any wrong connections. This could potentially cause damage to the panel.
	Improper voltage applied	See pre-startup check list.	Correct the voltage mismatch. This could potentially damage the panel. Use caution when applying power.
	Incorrect power connections	See pre-startup check list to see if motor and power leads were swapped.	Correct any wrong connections. This could potentially cause damage to the panel.
	Power disconnect open	Verify that the disconnect or circuit breaker is closed.	Correct any wrong connections. This could potentially cause damage to the panel.
	Operator switches off	Verify that operator devices are in operating position per startup procedures.	Set switches to the correct position.
	OL tripped	A tripped OL will disable the motor from running. Verify that OL relay is in the normal operating position per the manual.	Perform pre-startup checklist and set OL per instructions.
Open power fuses or circuit breaker trip	Improper voltage applied	See pre-startup check list and correct improper voltages.	Correct voltage mismatch. This could potentially damage the panel. Use caution when applying power.
	Incorrect power connections.	Motor and line voltages swapped. Make sure the line in and motor out are on the correct terminals. See pre-startup check list.	Correct any wrong connections. This could potentially cause damage to the panel.
	Power ground fault	Check motor and panel power wires to ground.	Eliminate any ground faults detected.
	Phase to phase short	Motor or panel has a short phase to phase. Check motor and panel phase to phase for shorts.	Eliminate any shorts detected.
	Motor overload	Motor is overloaded for the application.	Perform startup and verify motor current is within specifications. If motor current is exceeding nameplate FLA, reduce the load on the motor.
	Drive overload	Drive is overloaded for the application.	Perform startup and verify that drive current is within specifications. If not, reduce the load on the motor.
	Loose connections	Perform pre-startup check for loose connections.	Tighten loose connections.

Symptom	Possible cause	Test	Solution
Repeated fuse or circuit breaker fault.	Application problem	Perform startup procedures. Check panel output motor current at full speed and check for excessive over current.	If current is too high, reduce the load on the motor.
	Panel problem	Perform startup procedures. Check panel input current at full load and verify it is within acceptable range.	If current is too high, reduce the load on the motor.
	Power problem	Monitor incoming power for surges, sags and overall quality.	Correct any problems found.
	Motor problem	Test motor for correct function.	Repair or replace motor if a problem is found.
Open control fuse	Improper voltage applied	See pre-startup check list.	Correct voltage mismatch. This could potentially damage the panel. Use caution when applying power.
	Customer wires incorrectly terminated	See the customer connection drawing and make sure the wires are connected to the correct terminals.	Correct any wrong connections. This could potentially cause damage to the panel.
	Control ground fault	Check all control wires for a short to ground.	Correct any ground faults found. This could potentially cause damage to the panel.
	Control short	Check control wires for a short in supply voltage.	Correct any shorts. This could potentially cause damage to the panel.
Open SMPS fuse	Improper voltage applied	See pre-startup check list.	Correct voltage mismatch. This could potentially damage the panel. Use caution when applying power.
	Customer wires incorrectly terminated	See the customer connection drawing and make sure the wires are connected to the correct terminals.	Correct any wrong connections. This could potentially cause damage to the panel.
	Control ground fault	Check all control wires for a short to ground.	Correct any ground faults found. This could potentially cause damage to the panel.
	Control short	Check control wires for a short in supply voltage.	Correct any shorts. This could potentially cause damage to the panel.
Motor rotation incorrect	Rotation incorrect in bypass, drive or both	Motor rotation is backwards in drive mode, bypass mode, or both.	Perform motor rotation procedure in 4 Start Up.

Symptom	Possible cause	Test	Solution
Overload trips	Motor overloaded	Motor is drawing too much current for the application.	Perform startup and verify motor current is within specifications. If not, reduce the load on the motor.
	Loose connections	Look for signs of overheating on connections to OL.	Perform pre-startup check for loose connections and tighten. Replace any overheated components and wires.
	OL not set correctly	An improperly set OL can cause the OL to trip too soon. See pre-startup procedure for correct setting.	Set correct motor current on OL.
Contactor fails to pull in	Contamination	Remove contactor and check for contamination.	If contamination is found, repair or replace.
	Defective coil	Compare coil resistance to contactor specification. Inspect the coil for signs of overheating and damages.	If readings are not the same or if there are visible signs of damage, replace the coil or contactor.
	Auxiliary contact binding action	Remove auxiliary contacts and test contactor action.	If contactor operates with auxiliaries removed, replace auxiliary contacts.
Contactor fails to drop out	Contamination	Remove the contactor and check for contamination.	If contamination is found, repair or replace.
	Defective coil	Compare coil resistance to functional contactors of the same size.	If readings are not the same or there are visible signs of damage, replace the coil or contactor.
	Auxiliary contact binding action	Remove auxiliary contacts and test contactor action.	If the contactor operates with auxiliaries removed, replace auxiliary contacts.
Mains current imbalance greater than 3%	Problem with mains power	Rotate incoming power leads into option panel one position; A to B, B to C, and C to A.	If the imbalanced leg follows the wire, it is a power problem. Causes can vary. Contact an electrician or power expert for a solution.
	Problem with option panel	Rotate incoming power leads into option panel one position; A to B, B to C, and C to A.	If the imbalanced leg stays on the same option panel input terminal, it is a problem with the option panel. Contact the factory for assistance.
Motor current imbalance greater than 3%	Problem with motor or motor wiring	Rotate outgoing motor leads one position; U to V, V to W, and W to U.	If the imbalanced leg follows the motor lead, the problem is in the motor or wiring to the motor. Causes can vary. Contact an electrician or motor expert or a solution.
	Problem with option panel	Rotate outgoing motor leads one position; U to V, V to W, and W to U.	If the imbalanced leg stays on the same option panel output terminal, it is a problem with the option panel. Contact the factory for assistance.

Table 6.3 Fault Table

7 Appendix

7.1.1 Dimensions (all dimensions are in inch[mm])

	B3	B4	C3	C4
A	9.11 [231.4]	9.77 [248.2]	12.69 [322.2]	15.13 [384.2]
B	41.77 [1061.0]	43.30 [1099.9]	54.38 [1381.3]	59.64 [1514.9]
C	15.94 [405.0]	17.70 [449.6]	17.99 [457.0]	18.01 [457.5]
D	14.15 [359.5]	16.3 [413.9]	16.59 [421.5]	16.59 [421.5]
A1	1.10 [28.0]	0.59 [15.0]	0.59 [15.0]	0.59 [15.0]
a	7.87 [200.0]	7.87 [200.0]	10.63 [270.0]	12.99 [330.0]
b	41.02 [1042.0]	41.18 [1046.0]	51.89 [1318.0]	57.09 [1450.0]
c	0.27 [6.8]	0.33 [8.5]	0.33 [8.5]	0.33 [8.5]
d	0.43 [11.0]	0.39 [10.0]	0.59 [15.0]	0.59 [15.0]
e	0.65 [16.5]	0.61 [15.5]	0.75 [19.0]	0.79 [20.0]
f	0.27 [6.8]	-	-	-
g	0.47 [12.0]	-	-	-
h	0.65 [16.5]	-	-	-
j	0.32 [8.0]	-	-	-
k	0.32 [8.0]	-	-	-

Table 7.1 B3, B4, C3, and C4 Dimensions

	A2-A3 TIER 2	A5 TIER 2	B1 TIER 2	B2 TIER 2	C1 TIER 2	C2 TIER 2
A	7.63 [193.9]	19.18 [487.2]	19.09 [484.9]	19.09 [484.9]	24.37 [619.0]	29.24 [742.7]
B	31.74 [806.2]	18.86 [479.0]	21.48 [545.6]	28.17 [715.6]	29.94 [760.5]	33.49 [850.7]
C	8.27 [210.1]	8.55 [217.2]	10.84 [275.2]	10.86 [275.9]	12.74 [323.5]	13.72 [348.5]
C1	8.75 [222.3]	-	-	-	-	-
D	9.73 [247.1]	10.3 [261.7]	12.86 [326.7]	12.81 [325.4]	14.87 [377.7]	16.22 [412.0]
E	-	-	0.79 [20.1]	0.79 [20.1]	0.79 [20.1]	-
a	4.72 [119.9]	17.8 [452.2]	17.72 [450.1]	0.69 [17.6]	22.00 [558.8]	25.59 [650.0]
b	30.81 [782.6]	17.8 [452.2]	20.10 [510.6]	26.79 [680.5]	28.55 [725.2]	32.09 [815.1]
c	0.35 [8.9]	0.30 [7.7]	0.35 [8.9]	0.35 [8.9]	0.35 [8.9]	0.35 [8.9]
d	0.39 [10.0]	0.69 [17.6]	0.69 [17.6]	0.69 [17.6]	0.69 [17.6]	0.69 [17.6]
e	1.45 [36.9]	0.69 [17.6]	0.69 [17.6]	0.69 [17.6]	1.15 [29.3]	0.75 [19.1]
f	0.35 [8.9]	0.30 [7.7]	0.35 [8.9]	0.35 [8.9]	0.35 [8.9]	0.35 [8.9]
g	0.59 [15.0]	0.55 [14.0]	0.75 [19.1]	0.75 [19.1]	0.75 [19.1]	0.75 [19.1]
h	-	8.90 [226.1]	8.86 [225.1]	8.86 [225.1]	11.00 [279.4]	12.8 [325.2]
k	0.28 [7.2]	-	0.47 [12.0]	0.47 [12.0]	0.47 [12.0]	0.47 [12.0]
m	-	0.37 [9.5]	-	-	-	-

Table 7.2 A2-A3, A5, B1, B2, C1 and C2 Tier 2 Dimensions

	D1 TIER 2	D2 TIER 2
A	45.4 [1154.0]	60.4 [1534.5]
B	47.6 [1209.9]	62.53 [1588.2]
C	45.8 [1163.7]	60.7 [1542.8]
D	29.7 [754.1]	33.5 [850.9]
E	16.8 [426.0]	17.2 [438.0]
F	7.9 [200.0]	10.67 [271.0]
G	15.1 [383.5]	15.2 [386.5]
H	11.2 [285.0]	14.7 [374.0]
J	9.2 [232.5]	12.9 [327.0]
K	2.1 [52.5]	1.9 [47.0]
D1	14.96 [380.0]	14.96 [380.0]
D2	16.42 [417.0]	16.42 [417.0]

Table 7.3 D1, D2 Tier 2 Dimensions

7.1.2 Mechanical Diagrams

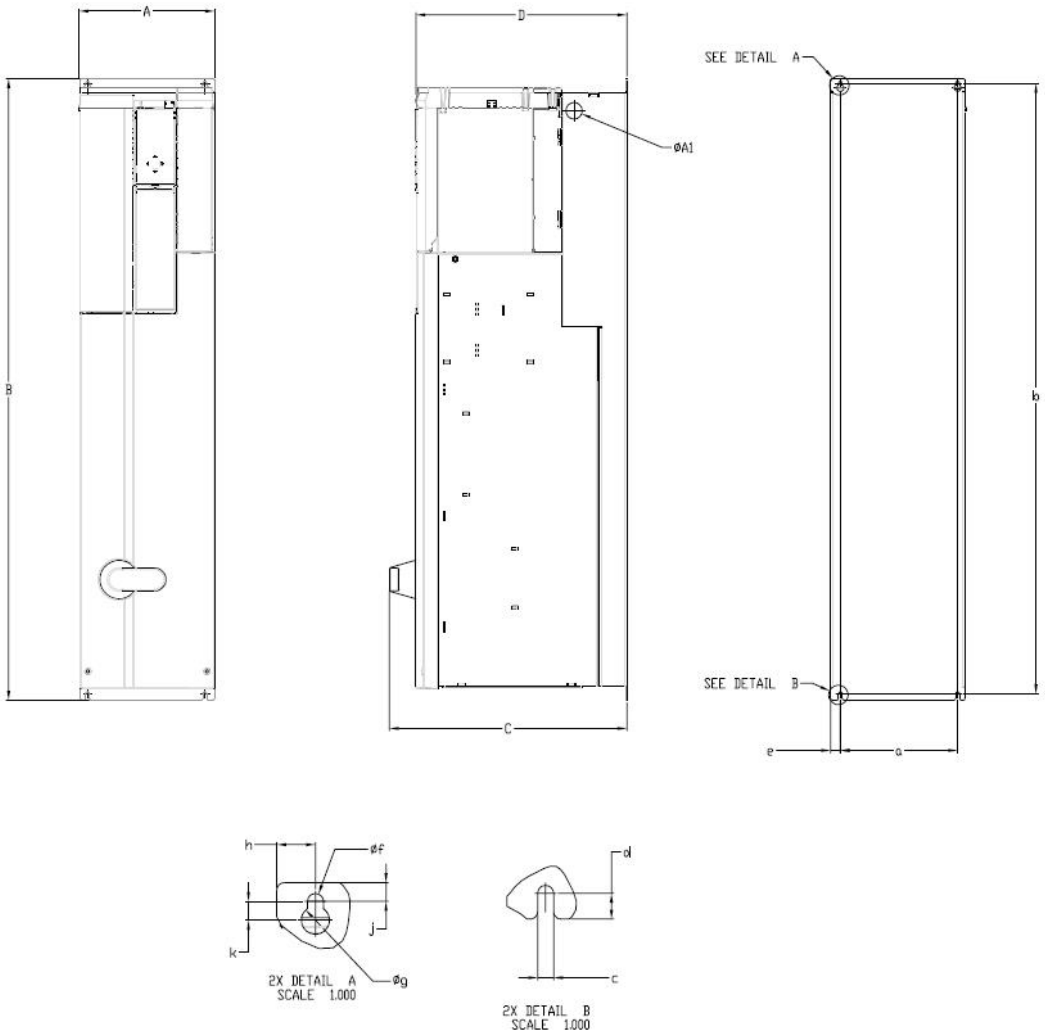

Figure 7.1 B3

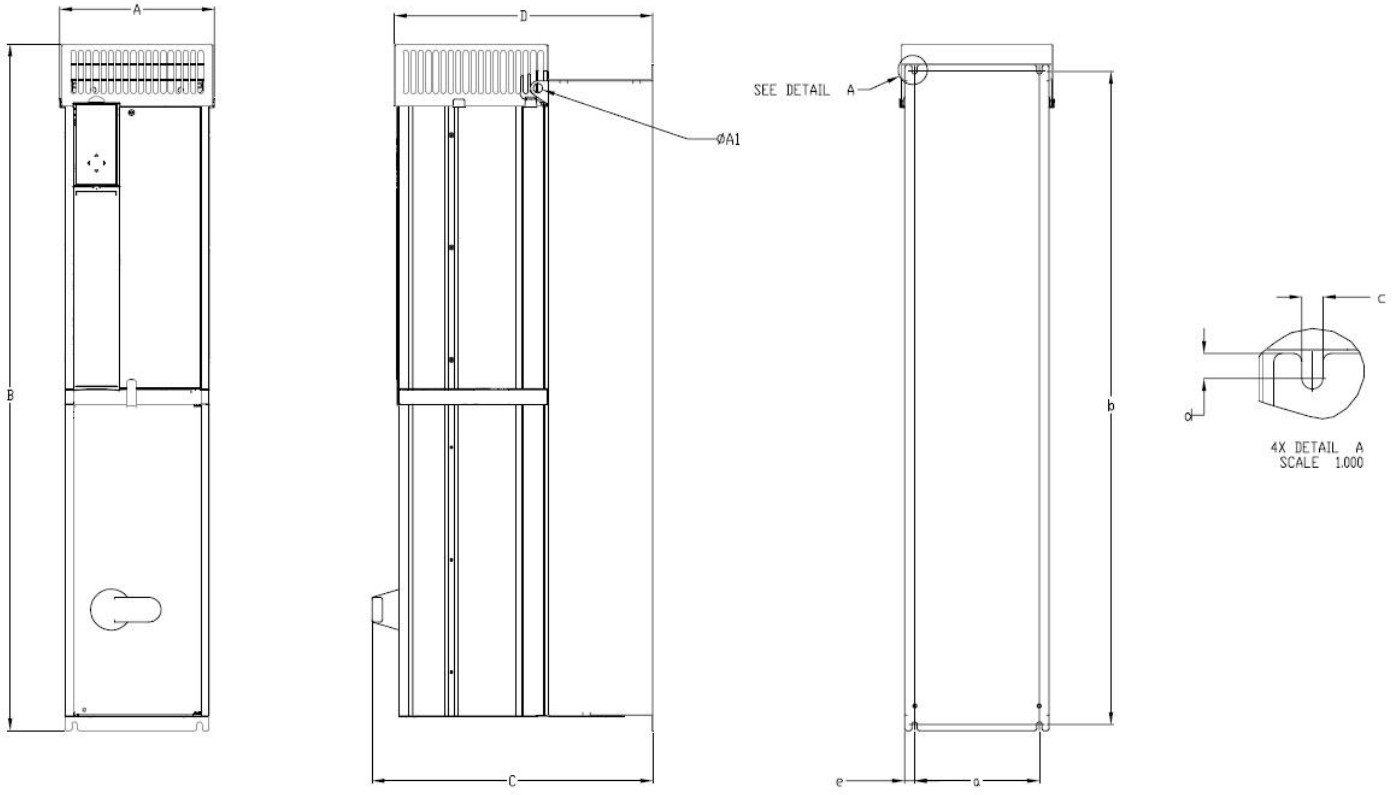

Figure 7.2 B4, C3, C4

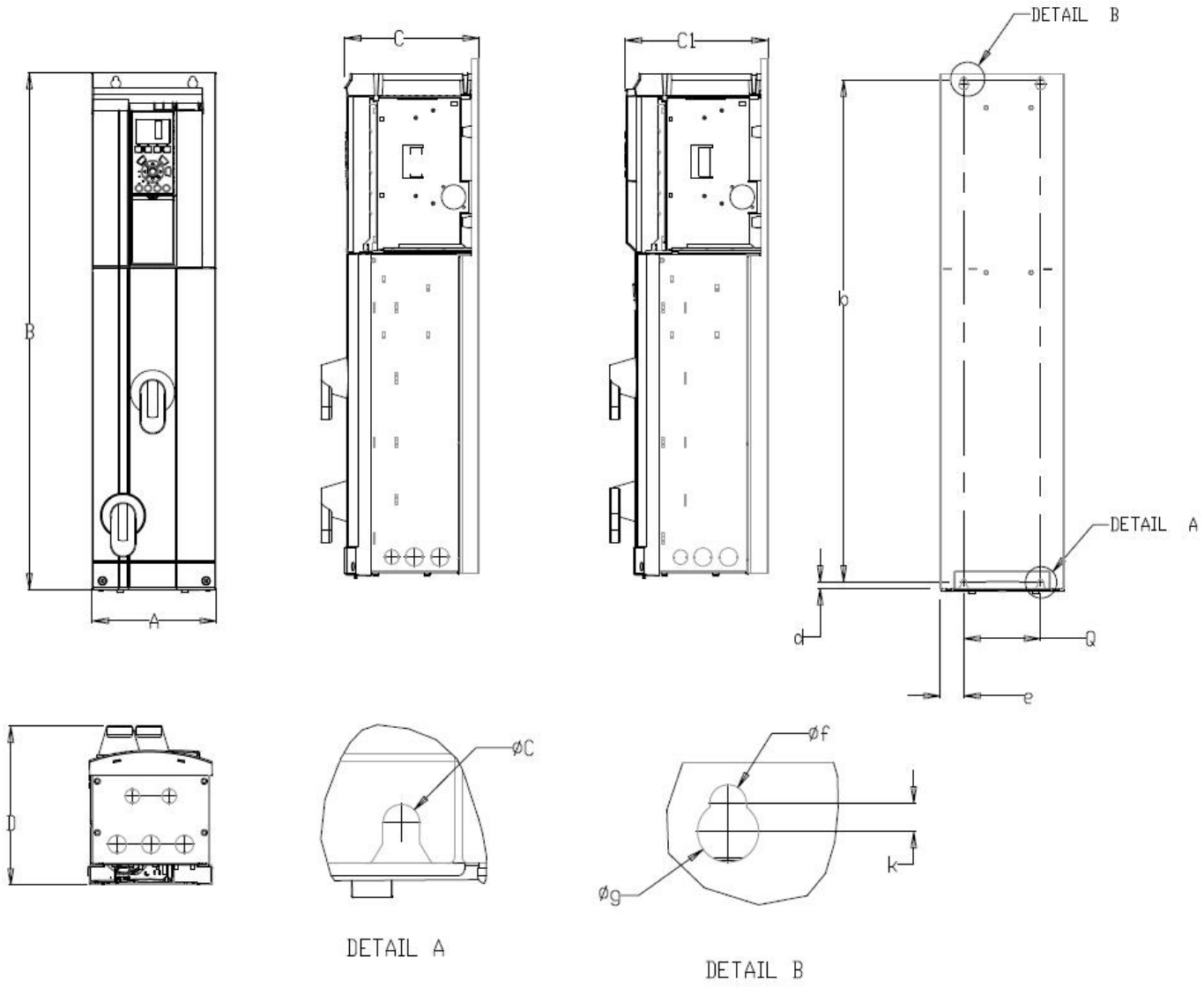

Figure 7.3 A2-A3 TIER 2

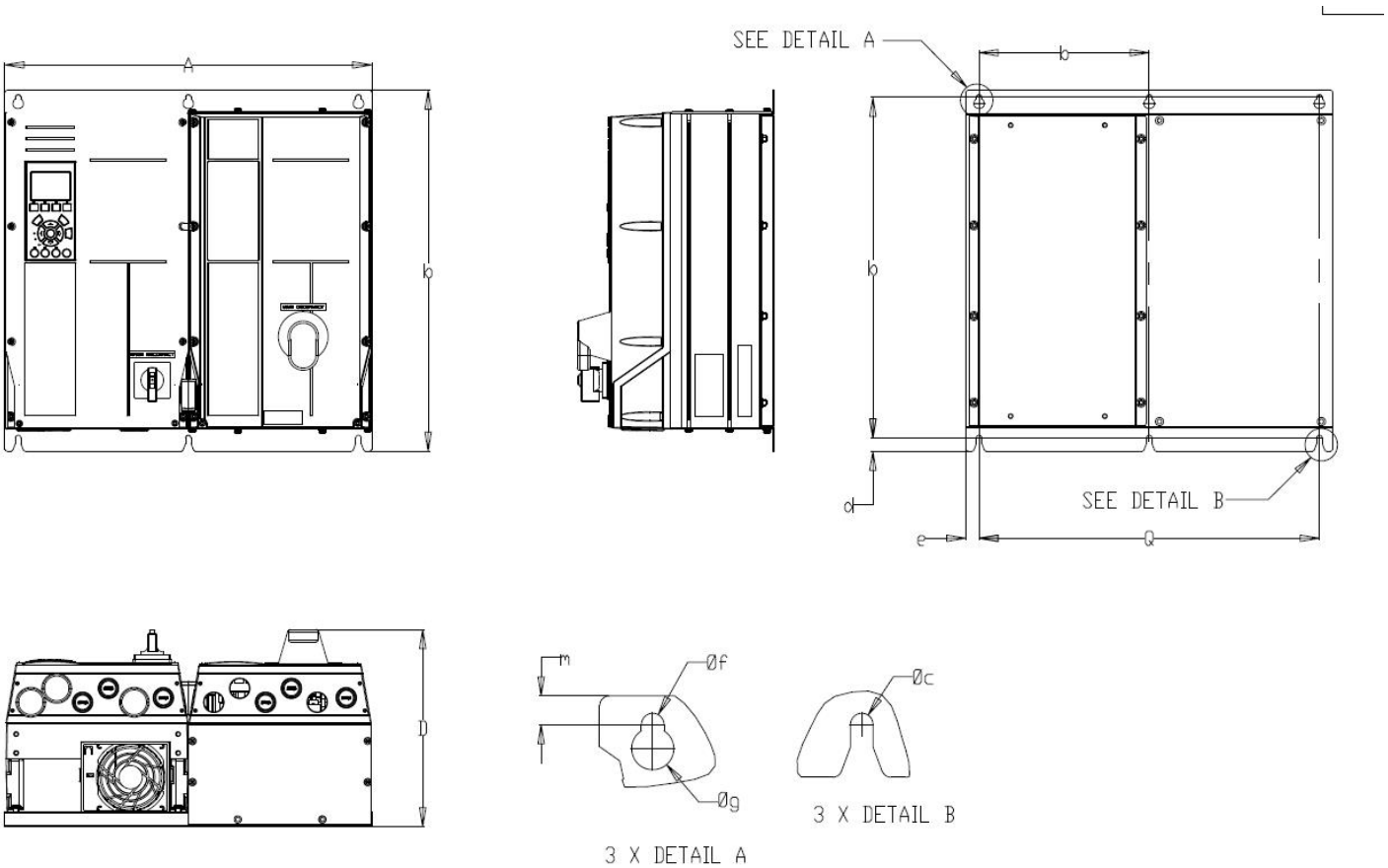

Figure 7.4 A5 TIER 2

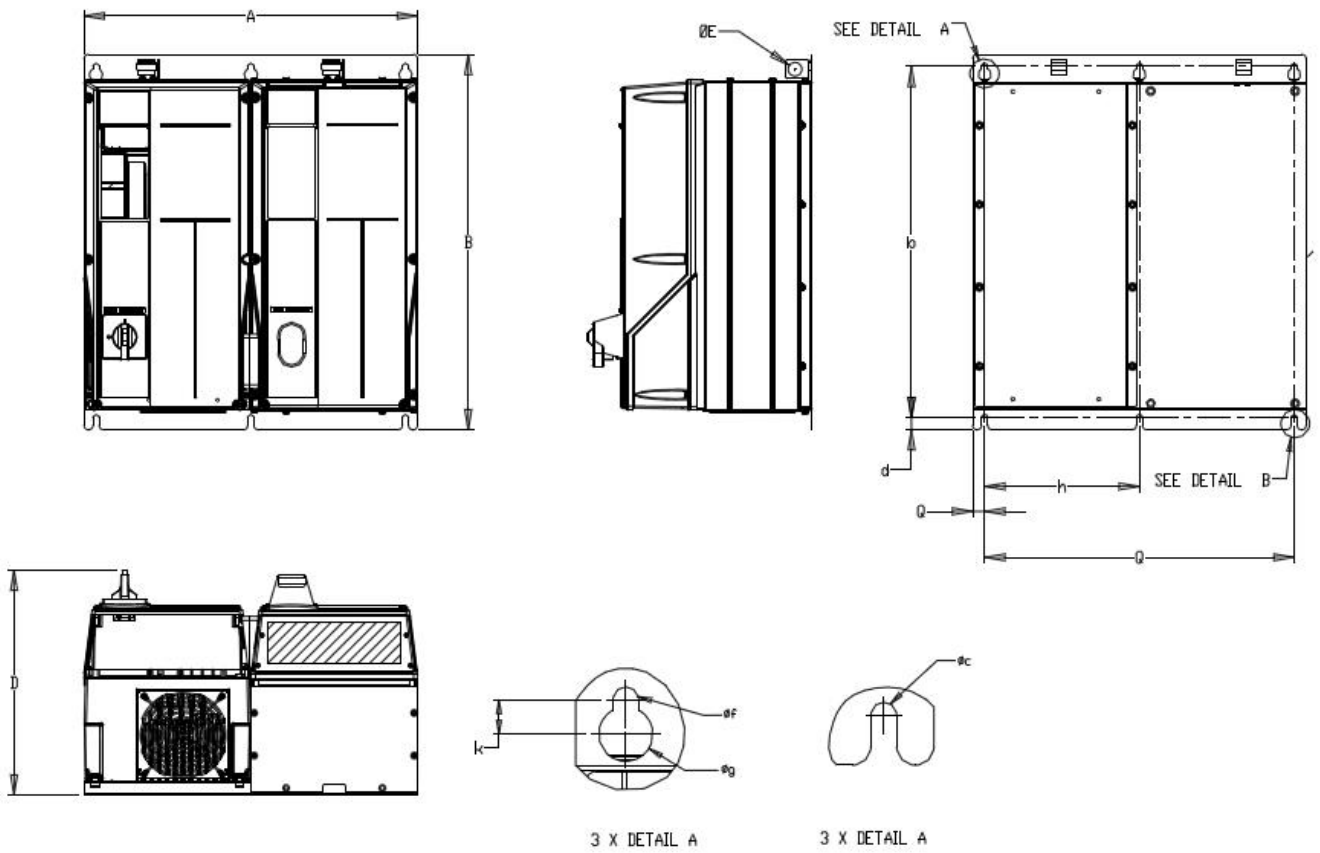

Figure 7.5 B1 TIER 2

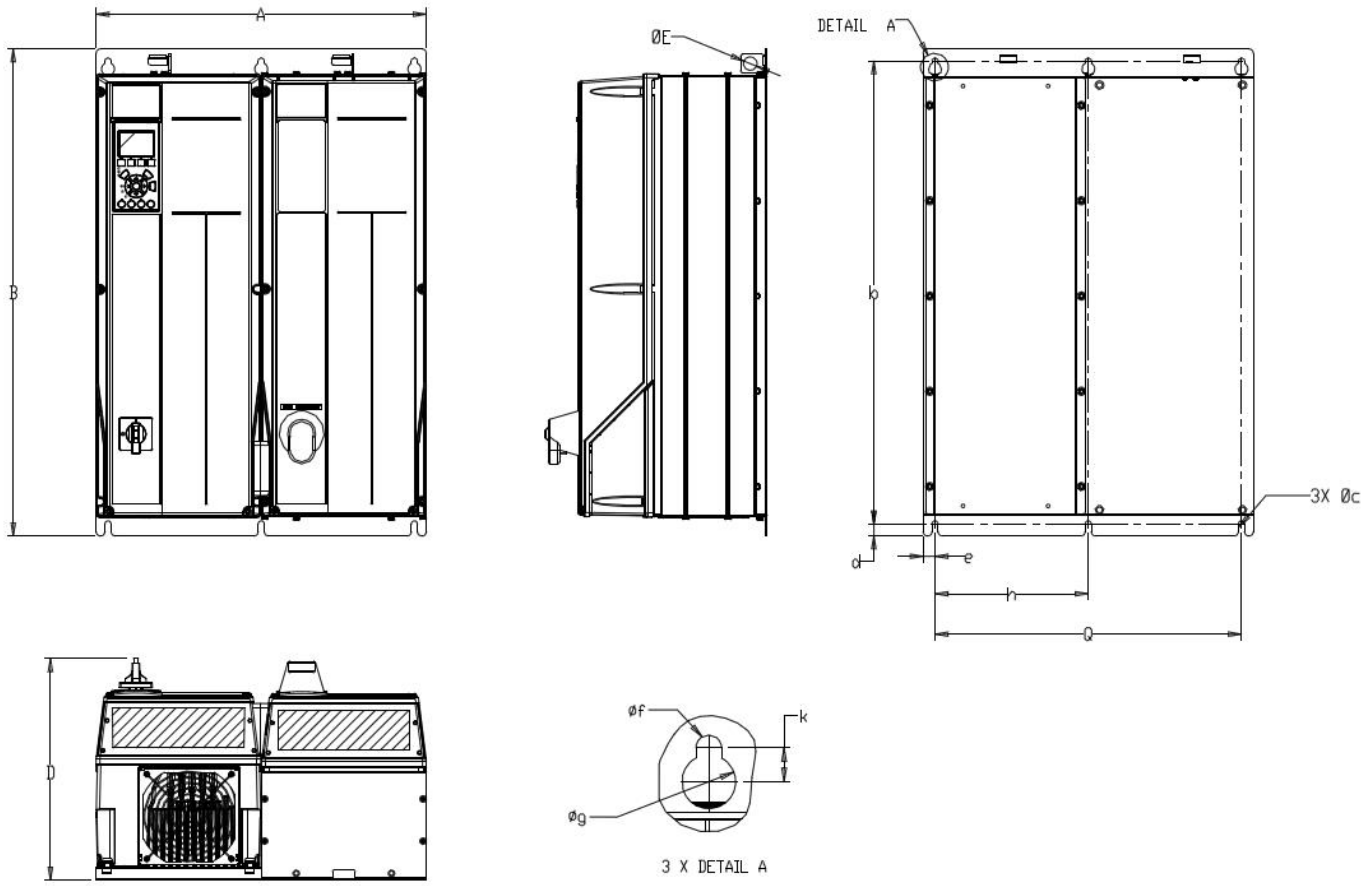

Figure 7.6 B2 TIER 2

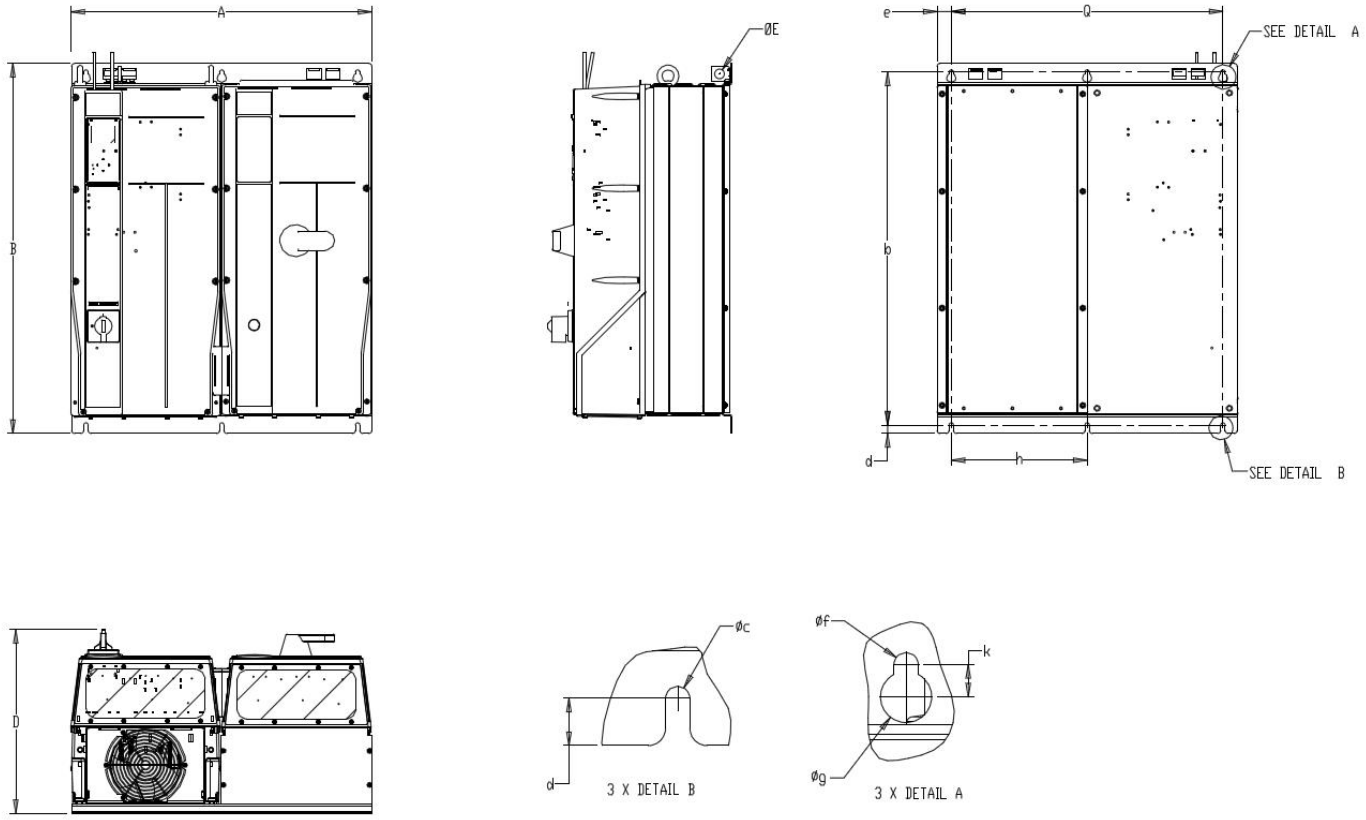

Figure 7.7 C1 TIER 2

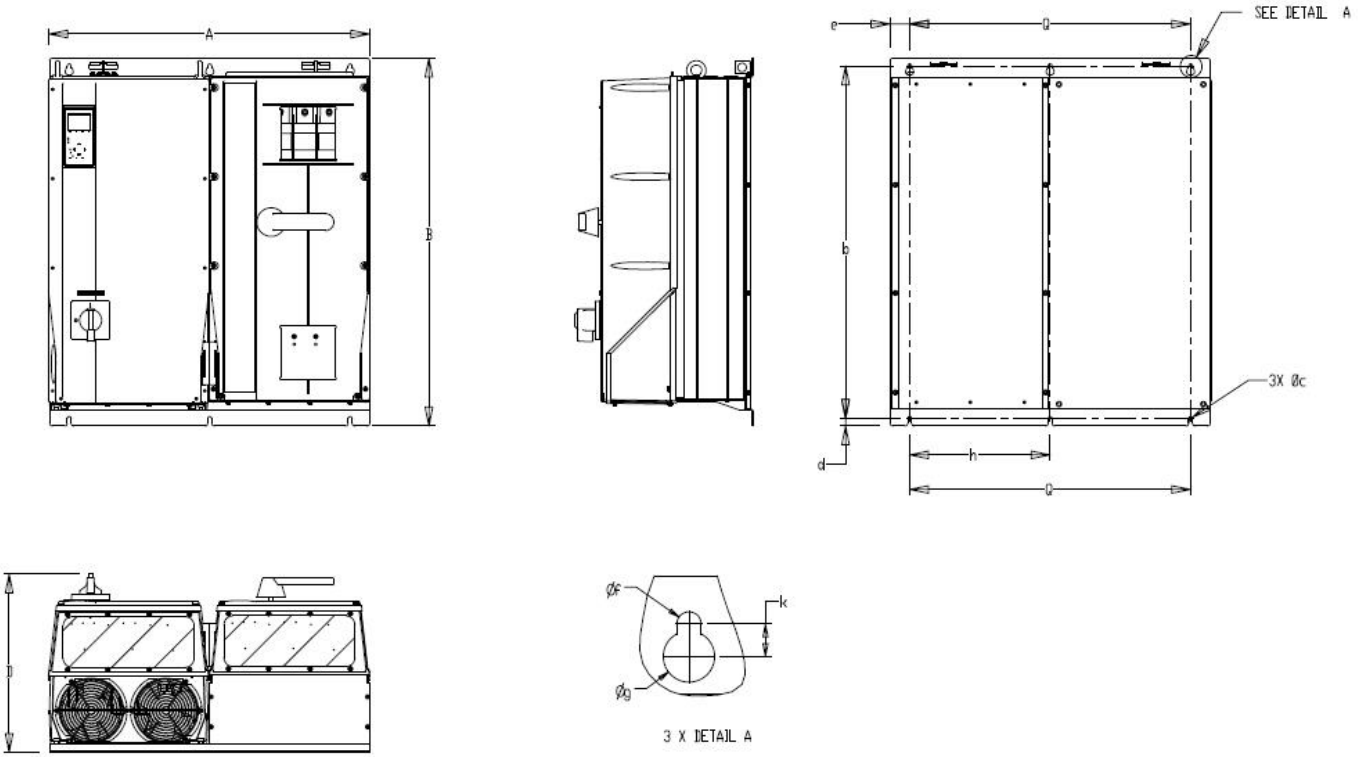

Figure 7.8 C2 TIER 2

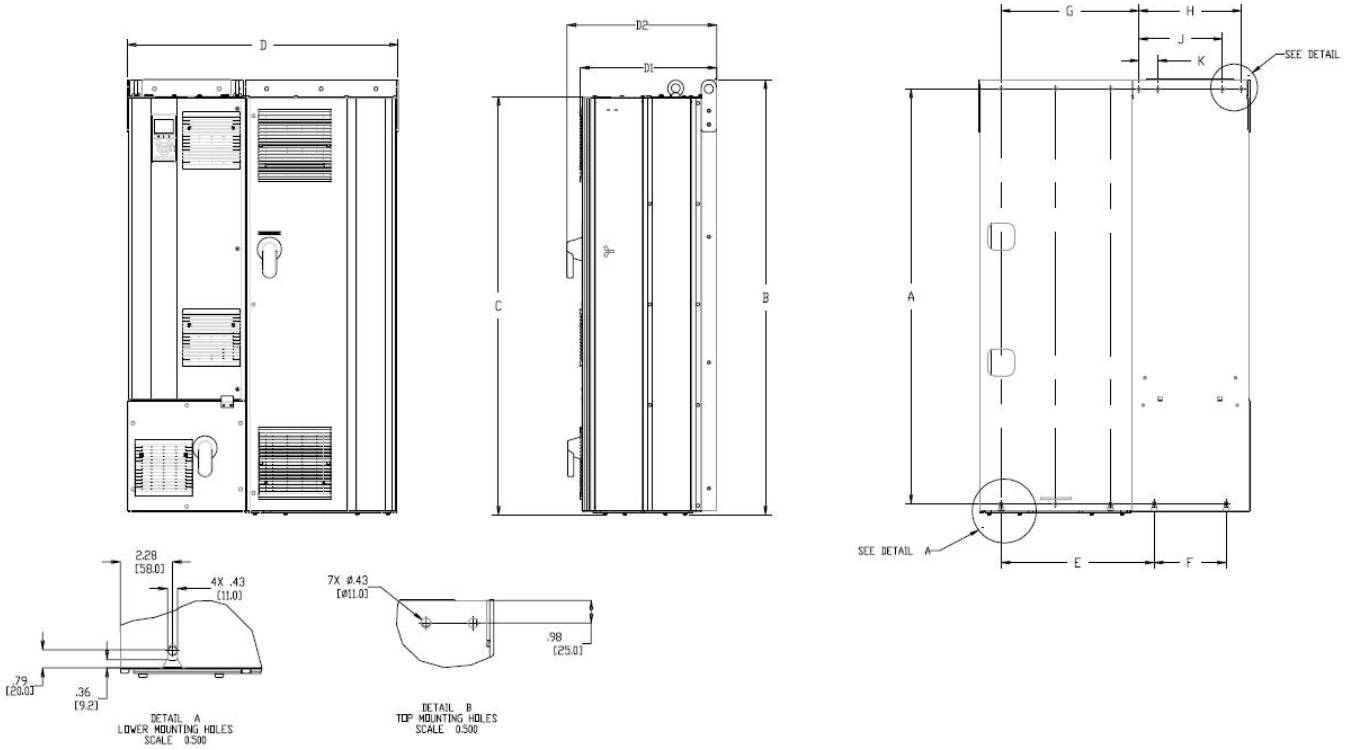

Figure 7.9 D1/D2 TIER 2

Notes

8 Product Warranty

8.1 COMMERCIAL WARRANTY

8.1.1 Warranty.

For goods sold to commercial buyers, Seller warrants the goods sold to Buyer hereunder (with the exception of membranes, seals, gaskets, elastomer materials, coatings and other "wear parts" or consumables all of which are not warranted except as otherwise provided in the quotation or sales form) will be (i) be built in accordance with the specifications referred to in the quotation or sales form, if such specifications are expressly made a part of this Agreement, and (ii) free from defects in material and workmanship for a period of thirty-six (36) months from the date of installation or forty-two (42) months from the date of shipment (which date of shipment shall not be greater than thirty (30) days after receipt of notice that the goods are ready to ship), whichever shall occur first, unless a longer period is specified in the product documentation (the "Warranty").

Except as otherwise required by law, Seller shall, at its option and at no cost to Buyer, either repair or replace any product which fails to conform with the Warranty provided Buyer gives written notice to Seller of any defects in material or workmanship within ten (10) days of the date when any defects or non-conformance are first manifest. Under either repair or replacement option, Seller shall not be obligated to remove or pay for the removal of the defective product or install or pay for the installation of the replaced or repaired product and Buyer shall be responsible for all other costs, including, but not limited to, service costs, shipping fees and expenses. Seller shall have sole discretion as to the method or means of repair or replacement. Buyer's failure to comply with Seller's repair or replacement directions shall terminate Seller's obligations under this Warranty and render the Warranty void. Any parts repaired or replaced under the Warranty are warranted only for the balance of the warranty period on the parts that were repaired or replaced. Seller shall have no warranty obligations to Buyer with respect to any product or parts of a product that have been: (a) repaired by third parties other than Seller or without Seller's written approval; (b) subject to misuse, misapplication, neglect, alteration, accident, or physical damage; (c) used in a manner contrary to Seller's instructions for installation, operation and maintenance; (d) damaged from ordinary wear and tear, corrosion, or chemical attack; (e) damaged due to abnormal conditions, vibration, failure to properly prime, or operation without flow; (f) damaged due to a defective power supply or improper electrical protection; or (g) damaged resulting from the use of accessory equipment not sold or approved by Seller. In any case of products not manufactured by Seller, there is no warranty from Seller; however, Seller will extend to Buyer any warranty received from Seller's supplier of such products.

THE FOREGOING WARRANTY IS EXCLUSIVE AND IN LIEU OF ANY AND ALL OTHER EXPRESS OR IMPLIED WARRANTIES, GUARANTEES, CONDITIONS OR TERMS OF WHATEVER NATURE RELATING TO THE GOODS PROVIDED HEREUNDER, INCLUDING WITHOUT LIMITATION ANY IMPLIED WARRANTIES OF MERCHANTABILITY AND FITNESS FOR A PARTICULAR PURPOSE, WHICH ARE HEREBY EXPRESSLY DISCLAIMED AND EXCLUDED. EXCEPT AS OTHERWISE REQUIRED BY LAW, BUYER'S EXCLUSIVE REMEDY AND SELLER'S AGGREGATE LIABILITY FOR BREACH OF ANY OF THE FOREGOING WARRANTIES ARE LIMITED TO REPAIRING OR REPLACING THE PRODUCT AND SHALL IN ALL CASES BE LIMITED TO THE AMOUNT PAID BY THE BUYER FOR THE DEFECTIVE PRODUCT. IN NO EVENT SHALL SELLER BE LIABLE FOR ANY OTHER FORM OF DAMAGES, WHETHER DIRECT, INDIRECT, LIQUIDATED, INCIDENTAL, CONSEQUENTIAL, PUNITIVE, EXEMPLARY OR SPECIAL DAMAGES, INCLUDING BUT NOT LIMITED TO LOSS OF PROFIT, LOSS OF ANTICIPATED SAVINGS OR REVENUE, LOSS OF INCOME, LOSS OF BUSINESS, LOSS OF PRODUCTION, LOSS OF OPPORTUNITY OR LOSS OF REPUTATION.

8.2 LIMITED CONSUMER WARRANTY

8.2.1 Warranty

For goods sold for personal, family or household purposes, Seller warrants the goods purchased hereunder (with the exception of membranes, seals, gaskets, elastomer materials, coatings and other "wear parts" or consumables all of which are not warranted except as otherwise provided in the quotation or sales form) will be free from defects in material and workmanship for a period of thirty-six (36) months from the date of installation or forty-two (42) months from the product date code, whichever shall occur first, unless a longer period is provided by law or is specified in the product documentation (the "Warranty").

Except as otherwise required by law, Seller shall, at its option and at no cost to Buyer, either repair or replace any product which fails to conform with the Warranty provided Buyer gives written notice to Seller of any defects in material or workmanship within ten (10) days of the date when any defects or non-conformance are first manifest. Under either repair or replacement option, Seller shall not be obligated to remove or pay for the removal of the defective product or install or pay for the installation of the replaced or repaired product and Buyer shall be responsible for all other costs, including, but not limited to, service costs, shipping fees and expenses. Seller shall have sole discretion as to the method or means of repair or replacement. Buyer's failure to comply with Seller's repair or replacement directions shall terminate Seller's obligations under this Warranty and render this Warranty void. Any parts repaired or replaced under the Warranty are warranted only for the balance of the warranty period on the parts that were repaired or replaced. The Warranty is conditioned on Buyer giving written notice to Seller of any defects in material or workmanship of warranted goods within ten (10) days of the date when any defects are first manifest.

Seller shall have no warranty obligations to Buyer with respect to any product or parts of a product that have been: (a) repaired by third parties other than Seller or without Seller's written approval; (b) subject to misuse, misapplication, neglect, alteration, accident, or physical damage; (c) used in a manner contrary to Seller's instructions for installation, operation and maintenance; (d) damaged from ordinary wear and tear, corrosion, or chemical attack; (e) damaged due to abnormal conditions, vibration, failure to properly prime, or operation without flow; (f) damaged due to a defective power supply or improper electrical protection; or (g) damaged resulting from the use of accessory equipment not sold or approved by Seller. In any case of products not manufactured by Seller, there is no warranty from Seller; however, Seller will extend to Buyer any warranty received from Seller's supplier of such products.

THE FOREGOING WARRANTY IS PROVIDED IN PLACE OF ALL OTHER EXPRESS WARRANTIES. ALL IMPLIED WARRANTIES, INCLUDING BUT NOT LIMITED TO THE IMPLIED WARRANTIES OF MERCHANTABILITY AND FITNESS FOR A PARTICULAR PURPOSE, ARE LIMITED TO THIRTY-SIX (36) MONTHS FROM THE DATE OF INSTALLATION OR FORTY-TWO (42) MONTHS FROM THE PRODUCT DATE CODE, WHICHEVER SHALL OCCUR FIRST. EXCEPT AS OTHERWISE REQUIRED BY LAW, BUYER'S EXCLUSIVE REMEDY AND SELLER'S AGGREGATE LIABILITY FOR BREACH OF ANY OF THE FOREGOING WARRANTIES ARE LIMITED TO REPAIRING OR REPLACING THE PRODUCT AND SHALL IN ALL CASES BE LIMITED TO THE AMOUNT PAID BY THE BUYER FOR THE DEFECTIVE PRODUCT. IN NO EVENT SHALL SELLER BE LIABLE FOR ANY OTHER FORM OF DAMAGES, WHETHER DIRECT, INDIRECT, LIQUIDATED, INCIDENTAL, CONSEQUENTIAL, PUNITIVE, EXEMPLARY OR SPECIAL DAMAGES, INCLUDING BUT NOT LIMITED TO LOSS OF PROFIT, LOSS OF ANTICIPATED SAVINGS OR REVENUE, LOSS OF INCOME, LOSS OF BUSINESS, LOSS OF PRODUCTION, LOSS OF OPPORTUNITY OR LOSS OF REPUTATION.

Some states do not allow limitations on how long an implied warranty lasts, so the above limitation may not apply to you. Some states do not allow the exclusion or limitation of incidental or consequential damages, so the above exclusions may not apply to you. This warranty gives you specific legal rights, and you may also have other rights which may vary from state to state.
To make a warranty claim, check first with the dealer from whom you purchased the product or visit www.xyleminc.com for the name and location of the nearest dealer providing warranty service.

Xylem |ˈzīləm|

1) The tissue in plants that brings water upward from the roots;
2) a leading global water technology company.

We're a global team unified in a common purpose: creating advanced technology solutions to the world's water challenges. Developing new technologies that will improve the way water is used, conserved, and re-used in the future is central to our work. Our products and services move, treat, analyze, monitor and return water to the environment, in public utility, industrial, residential and commercial building services settings. Xylem also provides a leading portfolio of smart metering, network technologies and advanced analytics solutions for water, electric and gas utilities. In more than 150 countries, we have strong, long-standing relationships with customers who know us for our powerful combination of leading product brands and applications expertise with a strong focus on developing comprehensive, sustainable solutions.

For more information on how Xylem can help you, go to www.xyleminc.com

xylem
Let's Solve Water

Xylem Inc.
8200 N. Austin Ave.
Morton Grove, IL 60053
Tel (847) 966-3700
Fax (847) 965-8379
www.xylem.com/bellgossett