CLARKE FIRE PUMP DRIVERS
EPA NSPS TIER 3 ENGINE MODELS
HSC 8200 SERIES PUMPS

AC FIRE PUMP
a xylem brand

-A- - MOUNTING FACE OF FLYWHEEL
-B- - ENGINE CRANKSHAFT HORIZONTAL CENTERLINE
-C- - ENGINE CRANKSHAFT VERTICAL CENTERLINE
-D- - PUMP SHAFT HORIZONTAL CENTERLINE

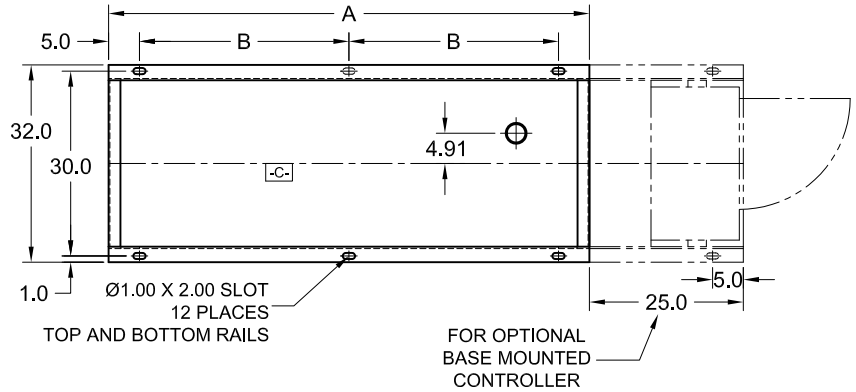

LISTED DRIVESHAFT	
ENGINE MODEL	DRIVESHAFT MODEL
JU4H-UFAD5G, AD58, ADP0 ADR0, ADW8, ADY8 ADJG	CDS30-S1

ITEM NO.	DESCRIPTION	CONNECTION SIZE
1	EXHAUST OUTLET CONNECTION	4" NPT EXHAUST
2	RAW WATER OUTLET	SEE NOTE 6.
3	FUEL SUPPLY CONNECTION (FARSIDE)	1/2" NPTF
4	FUEL RETURN CONNECTION (FARSIDE)	3/8" NPTF
5	HEATER JUNCTION BOX	VOLTAGE REQUIREMENTS: AC CONNECTION HEATER 1000 WATTS STD- 115 VAC ±5%-10% OPT- 230 VAC ±5%-10%

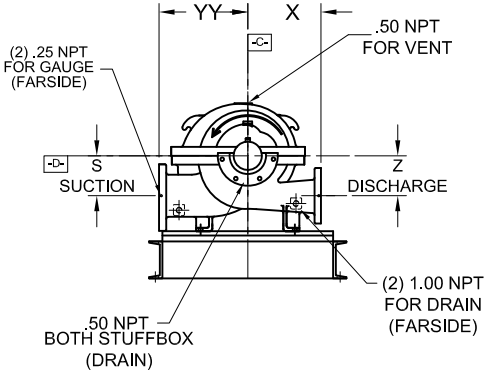

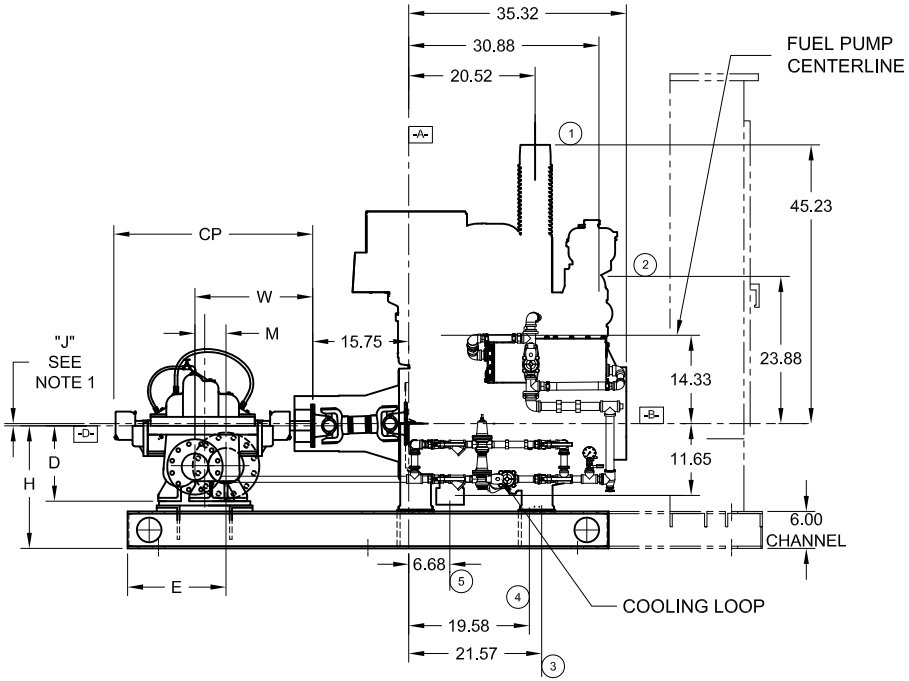

NOTES:
1. THE DRIVE SHAFT IS DESIGNED TO OPERATE AT A 2° ANGLE WITH THE INPUT AND OUTPUT SHAFTS IN PARALLEL. THE ENGINE CRANKSHAFT IS TO BE SET WITH A PARALLEL OFFSET OF 0.35" ± 0.10" INCHES VERTICALLY ABOVE THE PUMP SHAFT AND 0.00" ± 0.10" INCH PARALLEL OFFSET HORIZONTALLY RIGHT OR LEFT OF THE PUMP SHAFT. REFER TO THE CERTIFIED DRIVESHAFT INSTRUCTIONS MANUAL FOR ALIGNMENT INSTRUCTIONS.
2. BASE MUST BE COMPLETELY FILLED WITH GROUT PER NFPA 20.
3. PUMP IS CW (CLOCKWISE) ROTATION WHEN VIEWED FROM THE COUPLING END.
4. ALL DIMENSIONS ARE IN INCHES.
5. SUCTION AND DISCHARGE FLANGES DRILLED PER ANSI B16.1 (IF APPLICABLE).
6. RAW WATER DRAIN PIPING SIZE VARIES BASED UPON SITE CONDITIONS. ENGINE CONN. SIZE: 1-1/4" NPT

PUMP TYPE	PUMP SIZE		DIMENSIONS											
	SUCT.	DISCH.	A	B	H	E	M	W	CP	D	YY	X	S	Z
8X6X14F-L	8	6	98	44	24	29.13	7.00	27.88	45.75	17.00	20.00	16.50	9.00	9.00
8X6X14F-S	8	6	98	44	24	29.13	7.00	27.88	45.75	17.00	20.00	16.50	9.00	9.00
8X6X18F	8	6	98	44	26	29.13	7.00	27.88	45.75	19.00	20.00	16.50	11.00	11.00

ALL VIEWS 3rd ANGLE PROJECTION

NOT FOR CONSTRUCTION, INSTALLATION OR APPLICATION PURPOSES UNLESS CERTIFIED.

CERTIFIED FOR:						APPROVAL UL ☐ FM ☐ ULC ☐		
CUSTOMER ORDER NO:			IDENTIFICATION NO:				FLANGES	
PUMP DATA	SIZE	MODEL	CURVE NO.	GPM	HEAD (FT.)	ROTATION	SUCTION	DISCHARGE
						CW		
ENGINE DATA	MAKE	MODEL	HP	RPM	VOLTAGE	POLARITY	MAX ALTITUDE	
	CLARKE					NEG.		
SHOP ORDER:		CERTIFIED BY:			TOTAL WEIGHT		DATE:	

C133255 RevG
12AUG15