G&L Pumps

25SFH
2 x 2½-10

End Suction, Single Stage Centrifugal Pumps

Submittal Data 1750 RPM 60 Hertz

Job or Customer:	
Engineer:	
Contractor:	
Submitted By:	Date:
Approved By:	Date:
Order No.:	Date:
Specification Ref.:	

Quantity	Tag No.	Model No.	Enclosure	Volt	Phase	GPM	Feet	Comments

Technical Data

FLOW RANGE: 20 – 165 U.S. GPM
MINIMUM PUMPING RATE: 20 U.S. GPM
HEAD RANGE: 40 – 100 feet
MOTORS: ODP or TEFC

TEMPERATURE RANGE: 5°– 250°F (-15°– 121°C)
MAXIMUM WORKING PRESSURE: 175 PSI
FLANGES: 2½" FF (suction), 2" FF (discharge), ANSI class 125 drilled

Dimensions (inches)

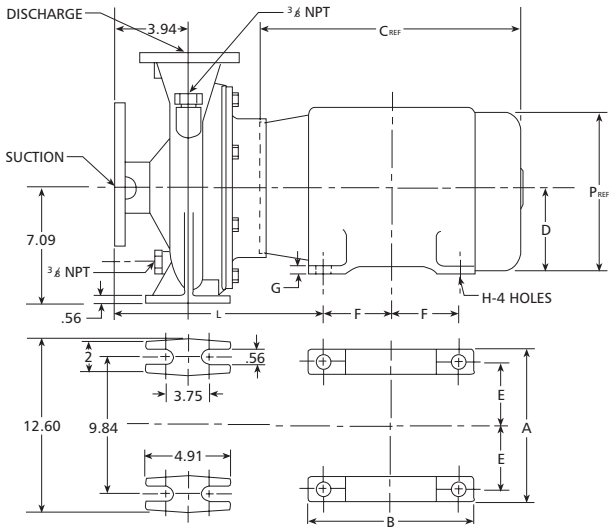

Electrical Data, Dimensions, and Weights

Motor Data							Dimensions (In.)										Net Wt. (lbs.)
	HP	S.F.	PH	Volts	Encl.	Frame	A	B	CREF	D	E	F	G	HDIA.	L	PREF	
	5	1.15	1	208-230	ODP	210JP	9.50	8.00	15.25	5.25	4.25	2.75 – 3.50	0.25	0.41	16.12	9.56	260
	5	1.15	1	208-230	ODP	219TCZ											
	5	1.15	1	230	TEFC	219TCZ			16.88							10.18	
	5	1.15	3	208-230/460	ODP	180JP	8.63	6.50	12.31	4.50	3.75	2.25 – 2.75	0.19		14.19	7.88	112
	5	1.15	3	208-230/460	TEFC	180JP			14.20							8.60	
	7.5	1.15	1	208-230	ODP	210JP	9.50	8.00	15.25	5.25	4.25	2.75 – 3.50	0.25		16.12	9.56	260
	7.5	1.15	3	208-230/460	ODP	210JP											
	7.5	1.15	3	208-230/460	TEFC	210JP			16.81							10.28	

Goulds Pumps
ITT Industries

© 2003 Goulds Pumps

G&L Pumps

25SFH
2 x 2½-10

End Suction, Single Stage Centrifugal Pumps

Performance Curve

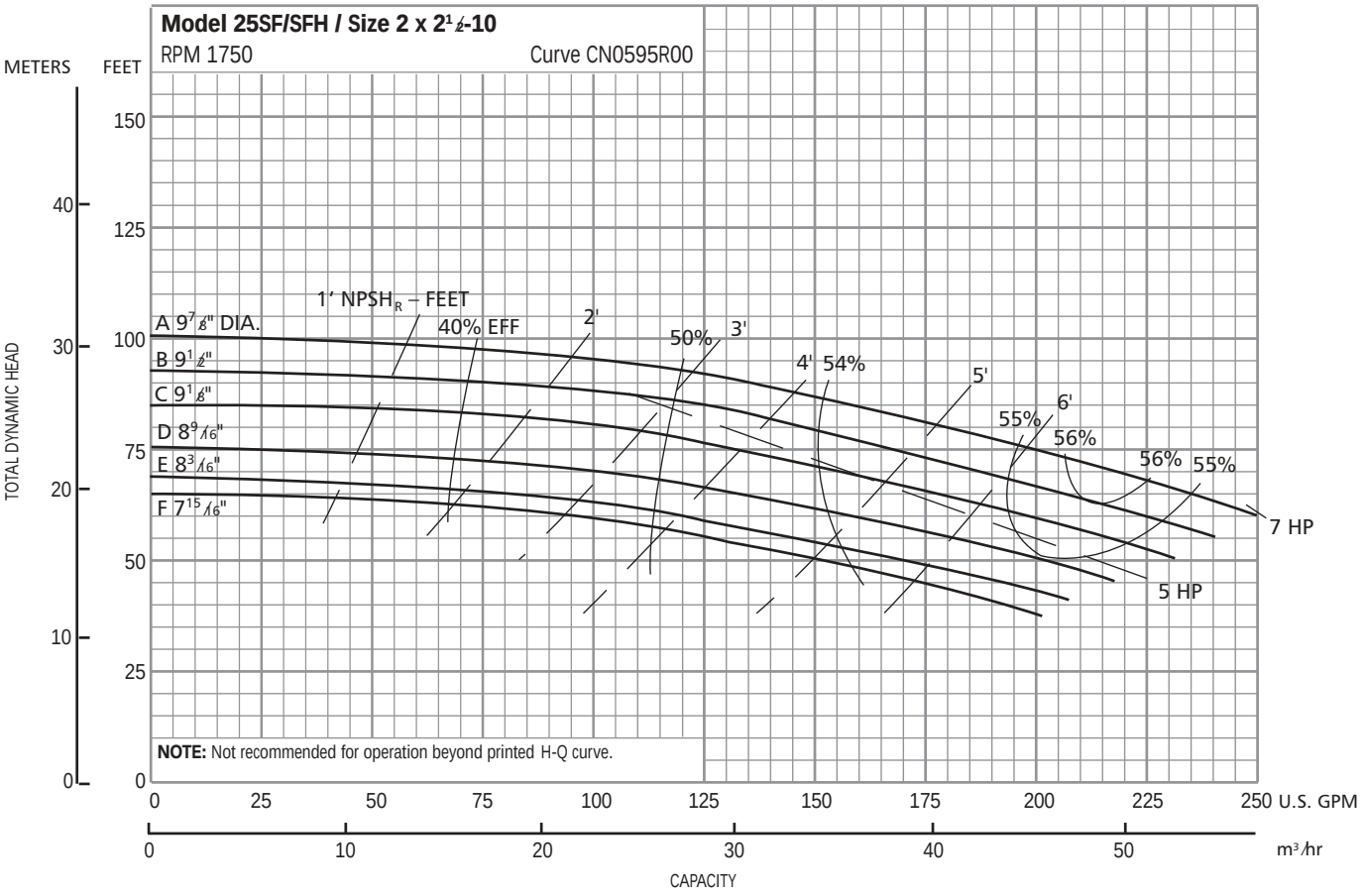

Materials of Construction

Description	Material
Casing	Cast Iron
Impeller	316L SS
Wear ring, case	316 SS
Wear ring, casing	316 SS
Seal housing	Cast Iron
Shaft sleeve	304 SS
Key, impeller	Carbon Steel
Bolt, impeller	304 SS
Washer, impeller	304 SS
Bolt, casing	Zinc plated Carbon Steel
Motor adapter	Cast Iron
Bolt, motor	Zinc plated Carbon Steel

Description	Material	
O-ring, Casing	BUNA-N	☐ standard
	EPR	☐ optional
	Viton	☐ optional
Mechanical Seal	*Rotary* / *Stationary* / *Elast.* / *Spring*	
	Carbon / Ceramic / BUNA / 316 SS	☐ standard
	Carbon / Sil-carb / EPR / 316 SS	☐ optional
	Carbon / Sil-carb / Viton / 316 SS	☐ optional
	Sil-carb / Sil-carb / Viton / 316 SS	☐ optional
Air vent plug	Brass	☐ optional

Goulds Pumps
1 Goulds Drive
Auburn, NY 13021