Lowara UK Variable Speed Booster Sets

FITTED WITH AISI 304 STAINLESS STEEL MANIFOLDS
NEW WRAS APPROVED RANGE INCLUDED

LOWARA
a xylem brand

LOWARA
a xylem brand
Your trusted partner
The professionals in pump technology across all building services
Lowara is a leading supplier of pump technology to the building services industry. Thousands of commercial and residential applications rely on our pumps, day in day out.
Lowara is globally recognised for its quality in pumping products and services, from consultation to implementation.
This brochure will give you an overview of our specialised Variable Speed Booster Set pumps range.
Please contact us for detailed technical specifications and quality standards.
Find out more on www.lowara.co.uk
xylem
Let's Solve Water

LOWARA
a xylem brand

CONTENTS

PAGE

Booster Set introduction..... 4

Booster Set main characteristics..... 6

Operation and slow fill mode..... 6

Selecting a Booster Set..... 7

Assessment of probable demand..... 8

Assessing head requirement..... 9

Electrical data and noise emissions Levels..... 10

GTKS Series single and twin Booster Sets..... 11

GHV10 - GHV40 Series Booster Sets..... 37

Resvari Variable Speed Booster Set..... 99

Varitank Variable Speed Booster Sets..... 102

LOWARA
a xylem brand

VARIABLE SPEED BOOSTER SETS

Wide range of 1, 2, 3 and 4 pump variable speed booster sets with individual transducers for each pump giving a very robust operating system.

APPLICATIONS

- Water supply to domestic dwelling and office buildings, hotels, shopping centers, factories, and greenhouses.
- Water supply for agricultural use (irrigation systems).
- Water supply to systems requiring constant pressure.

INTRODUCTION

Lowara booster sets have been designed to be both compact and cost effective. Both the GTKS and Hydrovar range are built to exacting standards and as such are suitable for the harshest environments. Packaged sets are suitable to cover all building service applications from small domestic premises to large building complexes as well as Irrigation.

RELIABLE CONTROLS

The control system in any booster set must be robust. The environment in which they operate can often be subject to power fluctuations, induced spikes, RFI and EMI. Both the GTKS and Hydrovar uses proven electronics to reduce exposure from all conditions normally encountered in their operating environment and will also ensure long periods of operation with minimal down time. These products have been tested and comply with the latest EC directives for EMC emissions and immunity, and the low voltage and machinery directives.

PUMP CONFIGURATION

Hydrovar sets can be supplied in many configurations.
Single pump, full duty operation.
Two pumps arranged as duty assist or duty standby.
Three pumps arranged as duty-assist-assist or standby.
Four pumps arranged as duty-assist-assist-assist or standby.
GTKS sets can be supplied as single or twin pump sets arranged for duty only, duty/assist or duty standby.
GHV Series 'R' Version
Ideal for limited space plant rooms with small footprint and compact design.

WRAS approval number 1403332

GTKS
END SUCTION

GTKS
MULTISTAGE

WRAS APPROVED PRODUCT

GHV10

GHV20

WRAS APPROVED PRODUCT

INSTALLATION AND SERVICE

Each set comes fully packaged complete with isolating valves, non return valves (Anti-vibration feet), and pressures sensors.
Small sets are provided with screwed manifolds whilst all other sets are provided with flanged manifolds.
Pressure vessels are normally supplied separate from the base to keep the pump set size to a minimum for ease of shipping and manoeuvrability, however vessels can be integrated into the pump set when required. All pumps can easily be removed for servicing.

PUMPS

Lowara have been manufacturing a large range of high quality end suction and vertical multistage pumps for many years. All of which comply to the latest MEI regulations. Booster set manufacturers have been quick to see the benefits of this range and many have incorporated them into their own booster set designs.
The Lowara range of booster sets have been designed and built to the same exacting standards as the pump range, this combination of building both pump and set results in an extremely reliable and cost effective solution to cold water boosting.

BOOSTER SET SELECTION

In the majority of applications the booster set must be capable of providing the maximum probable simultaneous demand. As this demand is not normally continuous, the duty can be shared between several pumps.
Where the flow rate is relatively small a two pump set can have each pump sized to cater for 100% of the duty, one pump acting as duty and one pump acting as standby.

As an alterative arrangement each pump can be sized to 60% of maximum demand. One pump acting as duty which will operate most of the time. The second pump will operate to assist the duty pump in peak demand periods, giving more than adequate support.

On systems with higher flow rates it may be more economical to split the duty between three pumps. Each pump can be sized to 50% of maximum demand.

SPECIAL REQUIREMENTS

All booster sets can be easily adapted to meet most customer specific requirements. If you have a special requirement please contact our head office who will be pleased to offer technical advice and design a system tailored to your specific requirement.

GHV30

WRAS APPROVED PRODUCT

Resvari

Varitank (base)

Varitank (frame)

MAIN CHARACTERISTICS OF ELECTRIC PUMPS USED IN GTKS AND GHV BOOSTER SETS

CEA, CEAM
Close-coupled, threaded centrifugal electric pumps, single impeller (CEA) up tp 0.9kW. Stainless steel pump body, seal housing, impeller and diffuser. Continuous duty, enclosed IE3 motor with external ventilation and finned casing made of aluminium alloy.

e-HM
Multi-stage centrifugal horizontal electric pumps with power up to 5.5 kW. Stainless steel pump body, seal housing and diffuser. Impellers made of Stainless steel or technopolymer. Continuous duty, enclosed IE3 high efficiency motor with external ventilation and finned casing made of aluminium alloy.

e-SV
Multi-stage centrifugal vertical electric pumps with high power efficiency up to 22 kW.
Stainless steel pump body, seal housing, diffuser and impellers. Continuous duty, enclosed standard IE3 high efficiency motor with external ventilation and finned casing made of aluminium alloy.

Operation
The following operation assumes that the set has been set up and commissioned correctly.
Variable speed booster sets are designed to maintain a constant system pressure with varying flows.
Each inverter head has its own 4-20ma transducer which monitors the system pressure at all times.
If 1 inverter or transducer fails the next inverter will take on the master function. All inverters talk to each other through a RS485 serial coms link.
Each Hydrovar head is fitted with four function keys: Up/Down Left/Right, these are used to navigate through the parameters and change as appropriate. Three LEDs are provided to indicate: Power-Run-Error.
Teknospeed sets only require the set point to be entered which is achieved by adjusting the potentiometer on the main inverter box and monitoring the adjacent pressure gauge until the correct set point is shown Three LEDs are provided to indicate: Power-Run-Error.
When a demand is placed on the system, water will be supplied from any vessels that are fitted to the system, once this supply is depleted the system pressure will start to fall, when the pressure falls to the set point the first inverter/pump will start to ramp up to maintain the set point, on sets with more than 1 pump fitted, if demand increases and the first inverter/pump reaches maximum speed and again the system pressure falls below the set point the next inverter/pump will be called into operate to assist the first inverter/pump, this operation may repeat on Hydrovar sets with more than two pumps.
When demand reduces the last inverter/pump to be called in will start to ramp down and eventually stop, if demand continues to decrease the next inverter/pump will start to ramp down and stop, this will continue until all inverters/pumps have stopped. The next time the pressure falls the same sequence as above will operate except the first inverter/pump to operate will have been rotated so all inverters/pumps have even usage.
If a low level in the break tank occurs all pumps will be stopped until the water supply has been reinstated, the pumps will then be automatically released to resume normal operation.

Slow fill mode
All Hydrovar sets are fitted with slow fill controls to help prevent excessive pressures being exerted on system pipe work. When the set comes back on line after a power outage or the set has been inhibited due to a low water level.

Slow fill operation
When the set powers up it will automatically inhibit all pumps except pump 1 which will ramp up slowly and operate at set point 2 which should be set to approximately equal to the height of the building (system pressure – 2 bar) it will remain at this set point until the delay timer normally set for two minutes (adjustable) times out and resets the Hydrovars to set point 1 allowing pump 1 to speed up to the normal system 1 set point and release all other pumps to cascade in as required. The same sequence will operate when the set comes back on from a low water level condition.

Volt Free Contacts
Hydrovar sets have Volt free Change/Over contacts available for Run & Fault conditions for each Hydrovar. See electrical drawing for connection details.
Teknospeed sets have 1 normally closed contact that is held open in a healthy condition and closes for fault or power fail.

SELECTING A BOOSTER SET

The first thing to do when selecting a set is to determine the volume of water required and the pressure it must produce.

CALCULATING THE FLOW RATE

The volume of water called water requirement depends on the type of users, e.g. homes, offices, schools, as well as their number. The theoretical requirement is the total volume of water required by all the users. In actual fact, since it is very unlikely that there should be a simultaneous demand by all the users, the real requirement is lower than the theoretic one.

CALCULATING THE HEAD

The pressure required depends on the type of user. A number of factors must be taken into account, including the height of the building, the suction conditions and the flow resistance in the pipes.

SELECTING A BOOSTER SET

According to the required flow rate and head values, it is possible to identify the most suitable type of electric pump. Single pump booster sets are normally only selected on systems that do not have a critical demand, I.E where an alternative supply is available.
On two-pump sets the pumps normally act as back-up for one another. A single pump is normally sufficient to provide for average requirements, while in conditions of high demand the back up pump may be called in to assist. With the cyclic changeover function duty assignment is rotated to ensure both pumps remain active and with even running hours, so wear is uniform and the use factor is reduced for longer pump life.
This system also ensures continuity of operation in case one of the pumps needs maintenance.

VESSELS

Lowara have included an 8lt vessels with all Teknospeed sets and a 24lt vessel for each pump on all other sets normally fitted on the discharge pipe in front of each pump giving a more compact design.

ASSESSMENT OF PROBABLE DEMAND

The method adopted is based on loading unit values as detailed in the Plumbing Engineering Design Guide published by the Institute of Plumbing.

When designing a hot or cold water supply system an assessment must be made to obtain the maximum probable simultaneous demand.
Depending on the type of services being provided it rarely occurs for all the appliances to be used at the same time therefore the design usually allows for a peak usage which is less than the maximum.
Probable demand will depend on, the type of building and its use, type of appliances installed and frequency of use.
The simultaneous demand in most installations can be calculated with an adequate degree of accuracy using the loading unit concept.
The usage patterns and types of appliances in different installations will vary greatly.
Sports and Leisure centres for example are usually calculated directly by the flow rates of each appliance, without diversity factors. Each case will need to be looked at in its own right and assessed accordingly. Judgement of the designer must prevail.

Loading unit values vary for each type of appliance. A loading unit has no precise value in terms of litres per second.
See loading unit table below.
By multiplying the total number of each appliance by the appropriate loading unit number and adding the resultant totals together, the recommended flow can be read from chart. (Fig. 1)

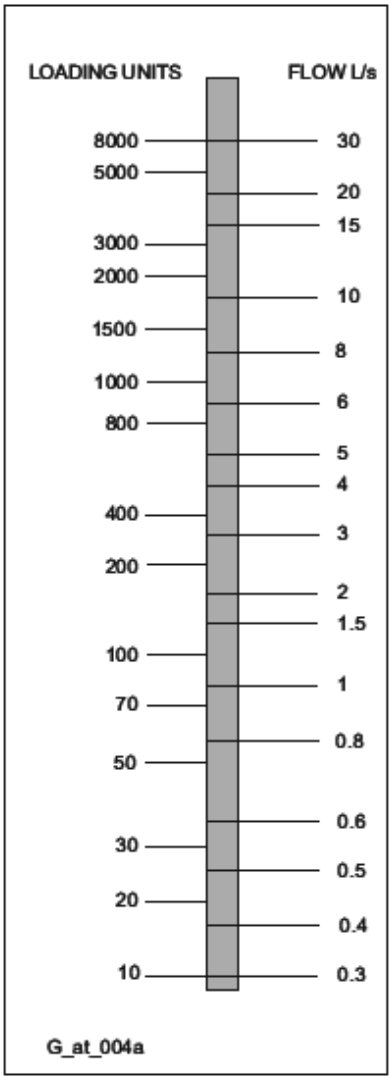

Fig. 1

Loading unit table

APPLIANCE	Loading Unit	Recommended Flow L/s
WC	1,5	0,12
Wash basin (hot & cold)	3	0,3
Sink (hot & cold)	6	0,4
Bath (hot & cold)	20	0,6
Shower (hot & cold)	10	0,24
Washing machine	2	0,3
Dish washer	2	0,3

Working Example

A block of standard flats containing a total of 70 dwellings

Each standard flat is assumed to have:
1 x Hand basin hot & cold = 3 L/U x 70 = 210
1 x WC cold only = 1.5 L/U x 70 = 105
1 x Shower hot & cold = 10 L/U x 70 = 700
1 x Sink hot & cold = 6 L/U x 70 = 420

Total Loading Unit =1435

This figure can now be read from chart opposite:
total flow = 8.5 L/s

ASSESSING HEAD REQUIREMENT

The head required in a boosted cold water system consists of three components, static head, residual pressure and system friction losses. The values of these three components are added together to give the total required head at the system flow rate.

Static head (He): This is the difference between the break tank low water line and the highest discharge point in the building. If the height of the build is not known, then 2.8-3.0 metres per floor can be used to assess the building height.

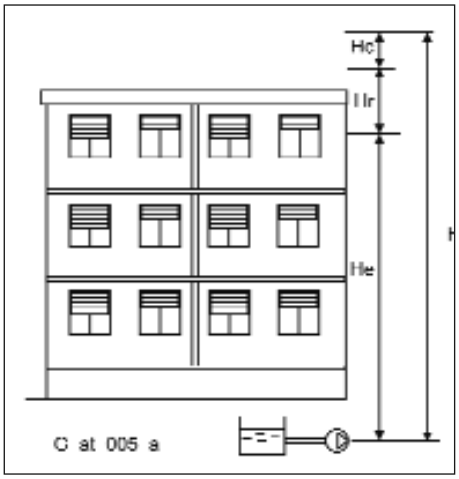

Residual pressure (Hr): This is the pressure required at the highest outlet device, normally 20 metres.
Note: Some modern showers may require higher pressures.

System friction losses (Hc): The total losses through pipework, pipework fittings, valves, PRV's and all other equipment fed through the pumpset must be added to find the total system losses.
On conventional systems that do not include excessive runs of pipe or specialised components a rough guide would be to allow 0.05 metres friction loss for each metre of static head.

Example:

Static head (He): Building height four floors @ 2.8m each	= 11.2m +
Residual pressure (Hr): Pressure at highest outlet	= 20m +
Friction loses (Hc): 11.2 (static head) x 0.05	= 0.56m
Total pump head required (H)	= 31.76m (3.11 Bar)

Pressure limitations
The designer must ensure that adequate precautions are taken to ensure that the system is capable of withstanding the closed valve head produced by the pump set. In cases where closed valve pressures cannot be tolerated, pressure reducing valves should be fitted down stream of the booster set.

Velocity
Pipework within the system shouldbe sized to limit the velocity to the figures stated in the table, higher velocities will lead to excessive noise, ware and higher running costs.
Pipework in occupied areas should be limited to 1.5m/s.

PIPE SIZE	SUCTION PIPE m/s	DELIVERY PIPE m/s	DELIVERY PIPE NOISE RATING dB
Less than 80mm	0,46	0,91 to 1,07	25
100-150mm	0,55	1,22 to 1,52	35
200mm	0,76	1,68	40
250 and above	0,91	1,82 to 2,13	50

Booster sizing
What information do we require to size a booster set?
As a minimum we need to know:

- The total flow rate, or information to assess this.
- The total head at flow rate, or the height of building.
- If the pumps are to operate under positive head, or suction lift conditions.
- Where the set is to be sited, I.E. basement or roof.
- Preferred choice fixed or variable speed

Additional information if available:

- How to split the duty for particular applications I.E. duty/standby or duty/assist.
- The size and material of the connecting pipework.

GHV/GTKS ELECTRICAL DATA

NOMINAL POWER 1 PUMP	GTKS 10 ABSORBED CURRENT 1 X 230V	GTKS 20 ABSORBED CURRENT 1 X 230V	GHV10../M ABSORBED CURRENT 1 X 230V	GHV20../M ABSORBED CURRENT 1 X 230 V	GHV10 ABSORBED CURRENT 3 X 400V	GHV20 ABSORBED CURRENT 3 X 400V	GHV30 ABSORBED CURRENT 3 X 400V	GHV40 ABSORBED CURRENT 3 X 400V
0.37	2.3	4.6						
0.55	3.5	6.8						
0.75	4.9	9.3	5.3	10.6				
1.1	6.8	13.6	7.5	15	2.36	5	7.4	9.9
1.5			9.9	19.8	2.97	6.7	9.4	12.5
2.2			14.5	29	4.33	9.1	13.6	18.2
3					6.07	12.7	**19.1**	25.5
4					7.63	16	24	32
5.5					10.4	21.8	32.8	43.7
7.5					14	29.4	44.1	58.8
11					20.3	42.6	63.9	85.3
15					26	54.6	81.9	109.2
18.5					33.2	69.7	104.6	139.4
22					38.6	81.1	121.6	162.1

NOISE EMISSION LEVELS

The table below shows the mean sound pressure levels (Lp) measured at 1 meters distance in a 3 field according to the A curve (ISO 1680 standard).

LpA (dB +/-3) Electric motor only										
P2 (kW)	GTKS10		GTKS20		GHV10		GHV20		GHV30	GHV40
50 Hz 2900 min -1	e-HM	e-SV	e-HM	e-SV	e-HM	e-SV	e-HM	e-SV	e-SV	e-SV
0.37	52	52	55	55						
0.55	55	55	58	58						
0.75	55	55	58	58	55	55	58	58	60	63
1.1	60	60	63	63	60	60	63	63	65	68
1.5					60	60	63	63	65	68
2.2						62		65	67	68
3						61		64	66	67
4						60		63	65	66
5.5						62		65	67	68
7.5						71		74	76	77
11						73		76	78	79
15						71		74	76	77
18.5						73		76	78	79
22						70		73	75	76

LOWARA
a xylem brand

GTKS SERIES SINGLE AND TWIN PUMP BOOSTER SETS

Single-phase variable-speed pressure boosters with pressure transducer control. CEA, e-HM and e-SV versions available.

SPECIFICATIONS
Number of pumps: 1 or 2
Delivery: up to 12.5 m³/h each pump
Head: up to 80 m
Electric supply panel voltage:
1 x 230 V 50 Hz (single-phase)
Power: 1 or 2 x 1.1 kW
Motor starting: variable frequency operation
Temperature of pumped liquid:
CEA SETS: 0°C to +60°C
e-HM SETS: 0°C to +60°C
e-SV SETS: 0°C to +80°C
Pump type: horizontal and vertical

MATERIALS
Twin pump e-SV WRAS approved Booster Sets
On/Off valves: Nickel plated brass
Non-return valves: Brass
Pressure transmitter: AISI316
Base: Galvanised Steel**
Base: R Version Painted Steel

Single pump WRAS compliant Booster Sets
On/Off valves: Nickel plated brass
Non-return valves: Brass
Pressure transmitter: AISI316
Base: Galvanised Steel**
Base: (e-SV only) Painted Steel

PRODUCT FEATURES
- Easy to install.
- Trouble-free servicing.
- Pressure transducer control (one per pump).
- Compact solution for residential use.
- Constant pressure.
- Protection against dry running.
- Automatic switching.
- Vibration dampers under base*
- Plastic control panel IP55*
- Unit factory assembled, calibrated and tested.
- Each set comes complete with an 8lt vessel for each pump.

Please Note:
* not on single pump units.
** base plates are not provided with single pump end suction sets.

IDENTIFICATION CODES

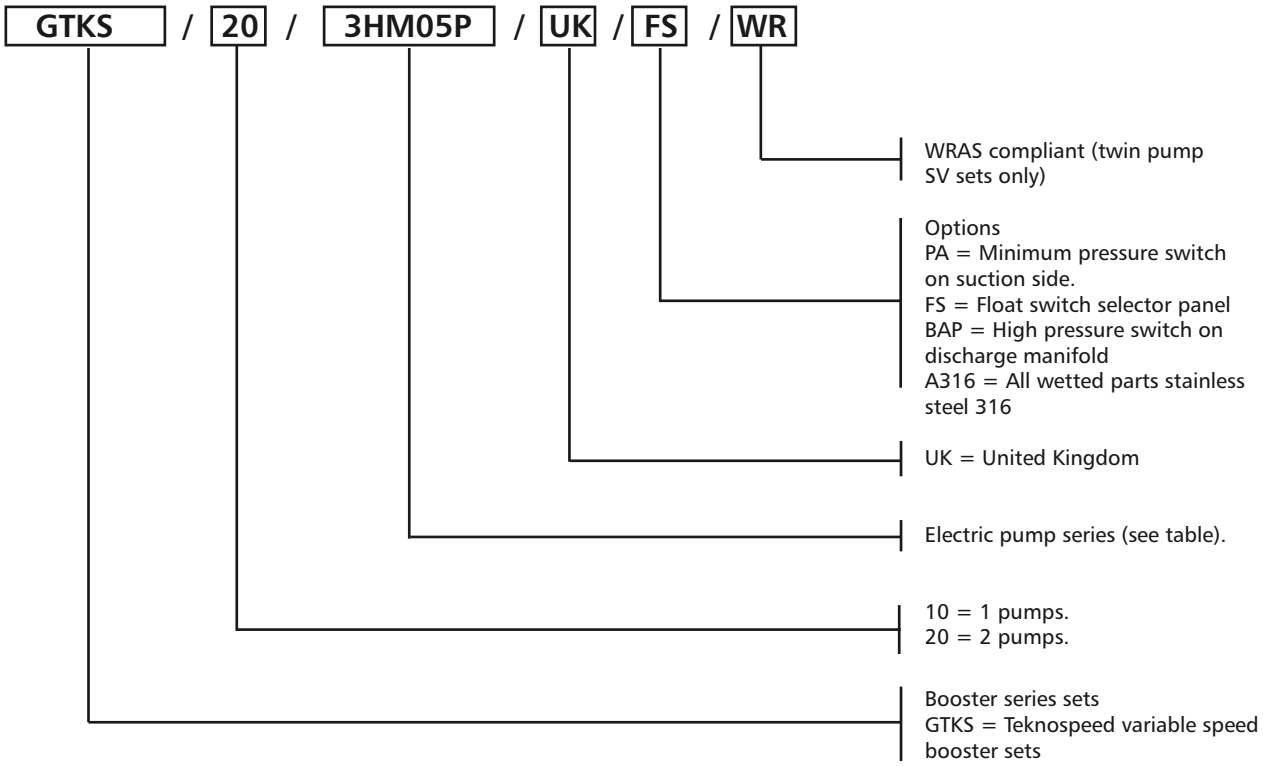

SPECIAL VERSIONS

Special versions featuring different material/operating temperatures and electrical panels with additional functions are available on request.

CONTROL PANEL AND BASIC CONNECTION DETAILS

GTKS10 single phase booster set 1.1Kw

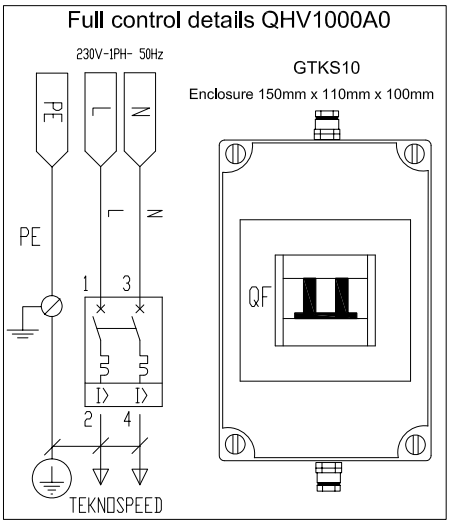

GTKS20 single phase booster set 1.1Kw

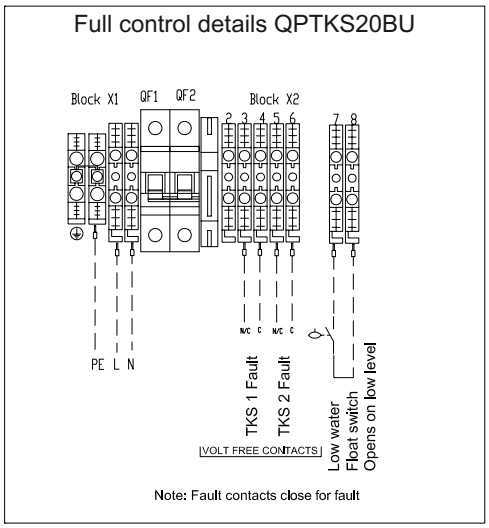

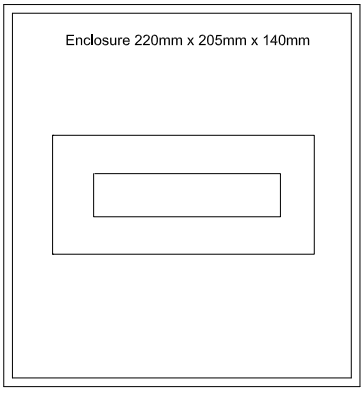

LOWARA
a xylem brand

GTKS SERIES HYDRAULIC SINGLE PUMP PERFORMANCE TABLE AT 50 Hz

Pump Type	Rated Power kW	Q + Delivery									
		l/min 0	20	30	40	50	60	70	80	100	120
		m^3/h 0	1.2	1.8	2.4	3	3.6	4.2	4.8	6	7.2
		H + TOTAL HEAD METRES COLUMN OF WATER									
TKS/CEA 80/5	0.75	32		30	29.3	28	27.4	26	24.7	21	
TKS/CEA 120/5	1.1	31.8					28.2	27	26.5	24.6	22.4
TKS/BG7	0.75	45.4	38.1	34.8	31.7	28.6	25.6				
TKS/BG11	1.1	53.2	45.8	42.5	39.5	36.5	33.5	30.3			

Pump Type TKS/1HM...P	Rated Power kW	Q + Delivery							
		l/min 0	11.7	16.0	21.0	26.0	31.0	36.0	40.0
		m^3/h 0	0.7	1.0	1.3	1.6	1.9	2.2	2.4
		H + TOTAL HEAD METRES COLUMN OF WATER							
TKS/1HM03	0.30	32.8	29.2	27.5	25.4	22.9	20.1	17.1	14.5
TKS/1HM04	0.40	44.1	39.3	37.2	34.3	31.0	27.3	23.2	19.8
TKS/1HM05	0.50	54.4	48.1	45.4	41.7	37.5	32.9	27.8	23.5
TKS/1HM06	0.75	69.3	63.0	60.1	56.1	51.4	45.9	39.8	34.5

Pump Type TKS/3HM...P	Rated Power kW	Q + Delivery							
		l/min 0	20.0	28.0	36.0	44.0	52.0	60.0	70.0
		m^3/h 0	1.2	1.7	2.2	2.6	3.1	3.6	4.2
		H + TOTAL HEAD METRES COLUMN OF WATER							
TKS/3HM02	0.30	23.2	20.9	19.6	18.1	16.2	14.2	12.0	9.0
TKS/3HM03	0.40	34.9	31.3	29.3	26.9	24.2	21.1	17.8	13.4
TKS/3HM04	0.50	45.8	40.6	37.8	34.5	30.7	26.7	22.3	16.3
TKS/3HM05	0.75	60.2	55.1	52.3	48.7	44.2	39.2	33.7	26.2
TKS/3HM06	1.1	72.7	66.8	63.6	59.3	54.1	48.1	41.5	32.5

Pump Type TKS/5HM...P	Rated Power kW	Q + Delivery							
		l/min 0	40.0	53.0	66.0	79.0	92.0	105	120
		m^3/h 0	2.4	3.2	4.0	4.7	5.5	6.3	7.2
		H + TOTAL HEAD METRES COLUMN OF WATER							
TKS/5HM02	0.40	23.9	20.1	18.7	17.2	15.4	13.3	10.6	6.9
TKS/5HM03	0.50	35.2	28.8	26.5	24.2	21.5	18.2	14.2	8.6
TKS/5HM05	1.1	61.4	53.1	49.9	46.4	42.3	37.2	30.6	21.3

Pump Type TKS/HM...S	Rated Power kW	Q + Delivery							
		l/min 0	11.7	16.0	21.0	26.0	31.0	36.0	40.0
		m^3/h 0	0.7	1.0	1.3	1.6	1.9	2.2	2.4
		H + TOTAL HEAD METRES COLUMN OF WATER							
TKS/1HM06	0.30	35.0	33.9	32.9	30.8	27.8	23.9	19.1	14.6
TKS/1HM12	0.55	71.6	70.0	68.2	64.4	58.6	50.9	41.4	32.4
TKS/1HM16	0.75	96.3	94.6	92.4	87.6	80.1	70.0	57.4	45.5
TKS/1HM22	1.1	133	131	128	121	111	97.2	79.9	63.6

Pump Type TKS/HM...S	Rated Power kW	Q + Delivery							
		l/min 0	20.0	29.0	38.0	47.0	56.0	65.0	73.3
		m^3/h 0	1.2	1.7	2.3	2.8	3.4	3.9	4.4
		H + TOTAL HEAD METRES COLUMN OF WATER							
TKS/3HM04	0.30	29.1	27.8	26.3	24.3	21.7	18.6	14.8	10.2
TKS/3HM05	0.40	36.8	35.3	33.5	31.0	27.9	24.1	19.2	13.5
TKS/3HM06	0.50	43.8	41.8	39.5	36.5	32.7	28.1	22.2	15.4
TKS/3HM08	0.75	60.5	59.4	57.0	53.5	49.0	43.1	35.6	26.7
TKS/3HM13	1.1	98.1	96.1	92.2	86.5	79.0	69.5	57.3	42.8

Pump Type TKS/HM...S	Rated Power kW	Q + Delivery							
		l/min 0	40.0	57.0	74.0	91.0	108	125	142
		m^3/h 0	2.4	3.4	4.4	5.5	6.5	7.5	8.5
		H + TOTAL HEAD METRES COLUMN OF WATER							
TKS/5HM02	0.30	14.8	13.9	13.2	12.2	11.1	9.6	7.8	5.5
TKS/5HM03	0.40	22.2	20.9	19.7	18.3	16.5	14.3	11.5	8.2
TKS/5HM04	0.50	29.3	27.2	25.6	23.5	21.1	18.1	14.4	9.8
TKS/5HM05	0.75	37.8	36.5	34.8	32.7	30.0	26.5	22.0	16.4
TKS/5HM08	1.1	60.4	58.2	55.5	52.1	47.7	42.1	34.9	25.9

Pump Type	Rated Power kW	Q + Delivery						
		l/min 0	83.3	100	133	170	183.3	233
		m^3/h 0	5	6	8	10.2	11	14
		H + TOTAL HEAD METRES COLUMN OF WATER						
TKS/10HM02	0.75	23.6	21.9	21.3	19.6	17	15.8	10
TKS/10HM03	1.1	35.7	33.0	32.1	29.6	25.8	24.1	16

GTKS10 SERIES DIMENSION DETAILS HORIZONTAL PUMPS
HMS HORIZONTAL PUMPS

Drg. No. M10289B

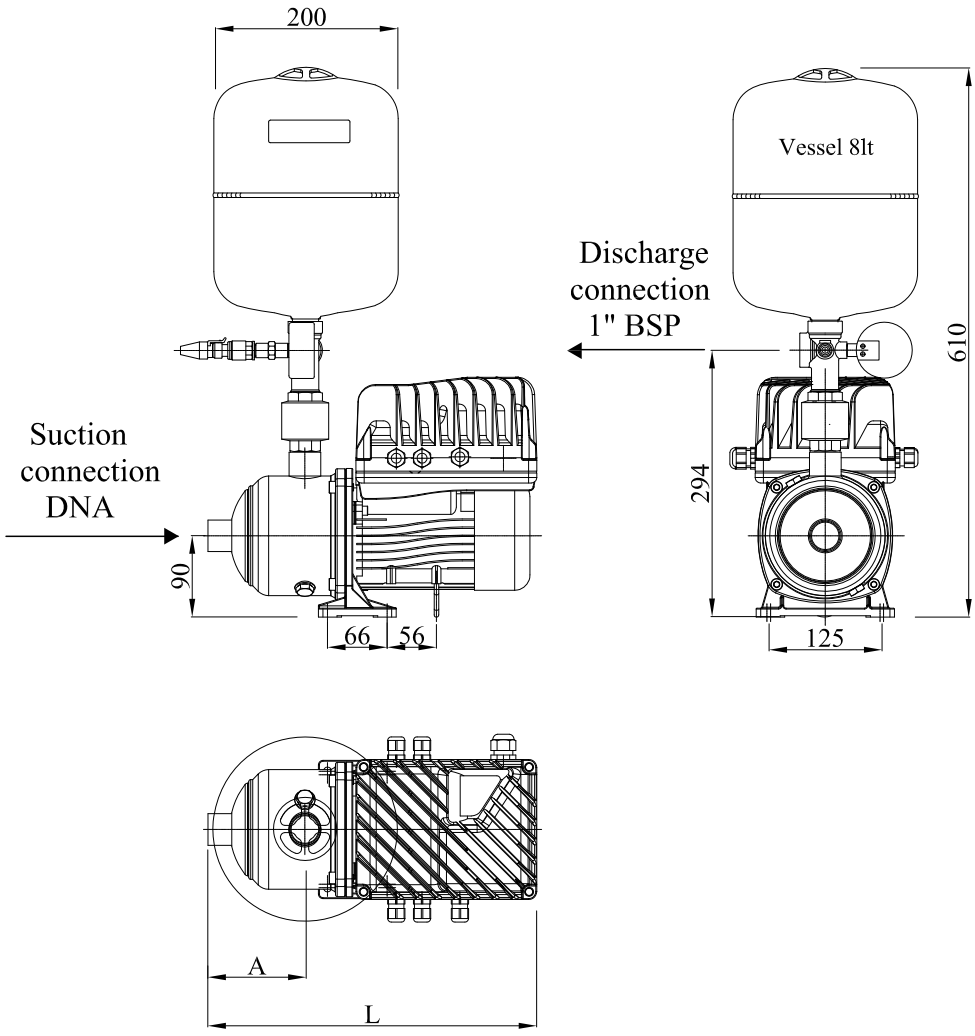

GTKS10	A	L	DNA	Kg
GTKS10/1HM03P03T	87	344	1"	12
GTKS10/1HM04P04T	107	364	1"	13
GTKS10/1HM05P05T	127	384	1"	14
GTKS10/1HM06S03T	147	404	1"	13
GTKS10/3HM02P03T	87	344	1"	12
GTKS10/3HM03P04T	87	344	1"	12
GTKS10/3HM04P05T	107	364	1"	13
GTKS10/3HM04S03T	107	364	1"	13
GTKS10/3HM05S04T	127	384	1"	13
GTKS10/3HM06S05T	147	404	1"	14
GTKS10/5HM02P04T	89	346	1¼"	12
GTKS10/5HM03P05T	89	346	1¼"	13
GTKS10/5HM02S03T	79	361	1¼"	12
GTKS10/5HM03S04T	104	361	1¼"	13
GTKS10/5HM04S05T	129	378	1¼"	14

Short motor foot

Dimensions in mm. Tolerance ± 10mm.

GTKS10 SERIES DIMENSION DETAILS HORIZONTAL PUMPS
HMS HORIZONTAL PUMPS

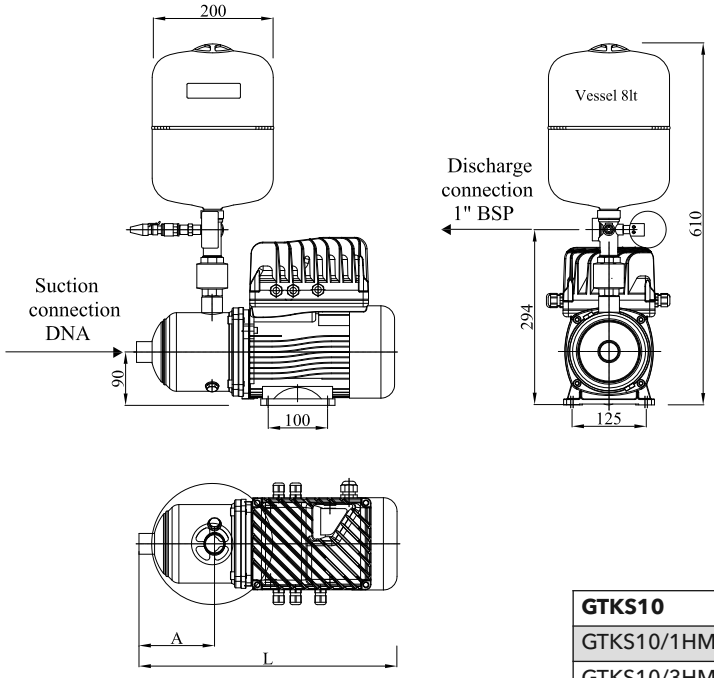

Drg. No. M10290B

GTKS10	A	L	DNA	Kg
GTKS10/1HM06P07T	147	455	1"	19
GTKS10/3HM05P07T	127	435	1"	18
GTKS10/3HM06P11T	147	455	1"	19
GTKS10/5HM05P11T	129	437	1¼"	20
GTKS10/3HM05S04T	154	462	1¼"	19

Standard motor foot

Dimensions in mm. Tolerance ± 10mm.

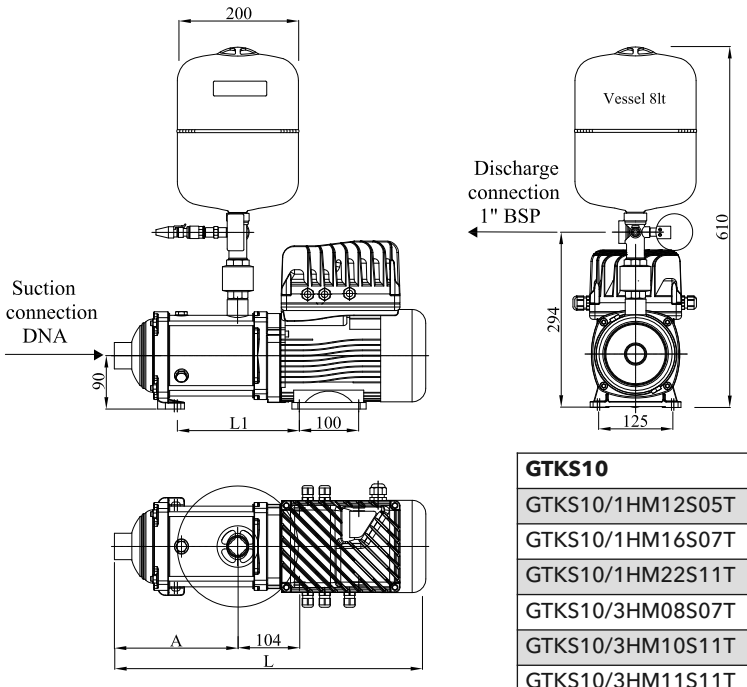

Drg. No. M10291C

GTKS10	A	L	L1	DNA	Kg
GTKS10/1HM12S05T	251	524	253	1"	18
GTKS10/1HM16S07T	331	648	333	1"	20
GTKS10/1HM22S11T	451	768	453	1"	26
GTKS10/3HM08S07T	171	488	173	1"	21
GTKS10/3HM10S11T	211	528	213	1"	22
GTKS10/3HM11S11T	231	548	233	1"	23
GTKS10/3HM12S11T	251	568	253	1"	23
GTKS10/3HM13S11T	271	588	273	1"	23
GTKS10/5HM08S11T	208	525	208	1¼"	22

Sleeve design

Dimensions in mm. Tolerance ± 10mm.

GTKS10 SERIES DIMENSION DETAILS HORIZONTAL PUMPS
CEA HORIZONTAL PUMPS

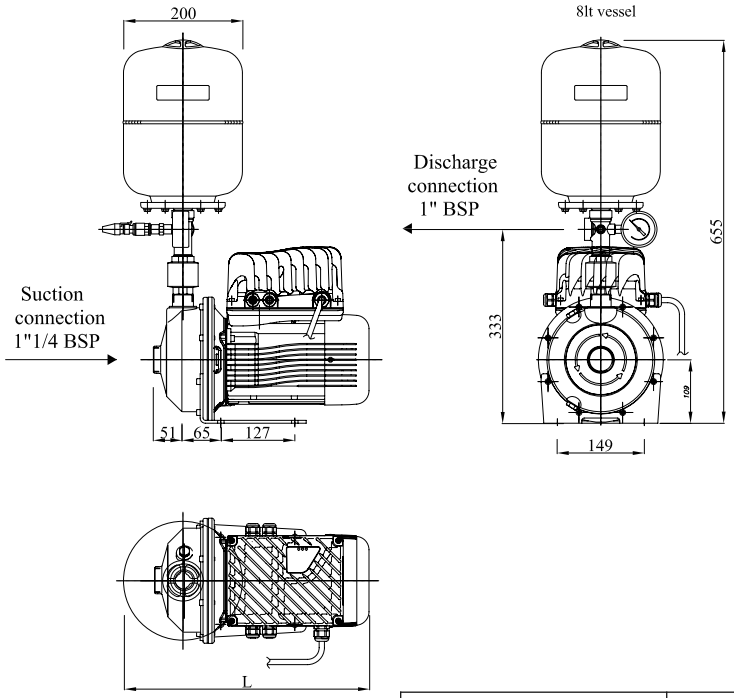

Drg. No. M10199A

GTKS10	DNA	DNM	L	Kg
GTKS10/CEA80/5/V	R1"	R1 1/4"	375	21
GTKS10/CEA120/5/V	R1"	R1 1/4"	420	22

Case mounting foot

Dimensions in mm. Tolerance ± 10mm.

BG HORIZONTAL PUMPS

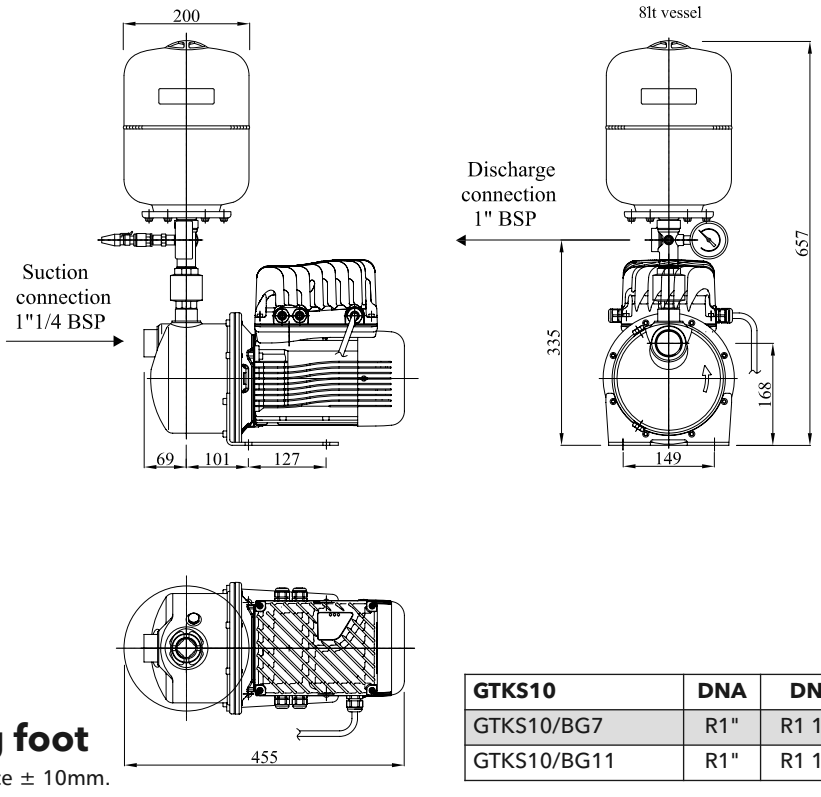

Drg. No. M10200A

GTKS10	DNA	DNM	Kg
GTKS10/BG7	R1"	R1 1/4"	23
GTKS10/BG11	R1"	R1 1/4"	24

Case mounting foot

Dimensions in mm. Tolerance ± 10mm.

GTKS10/1SV - 10SV BOOSTER SET DIMENSIONS

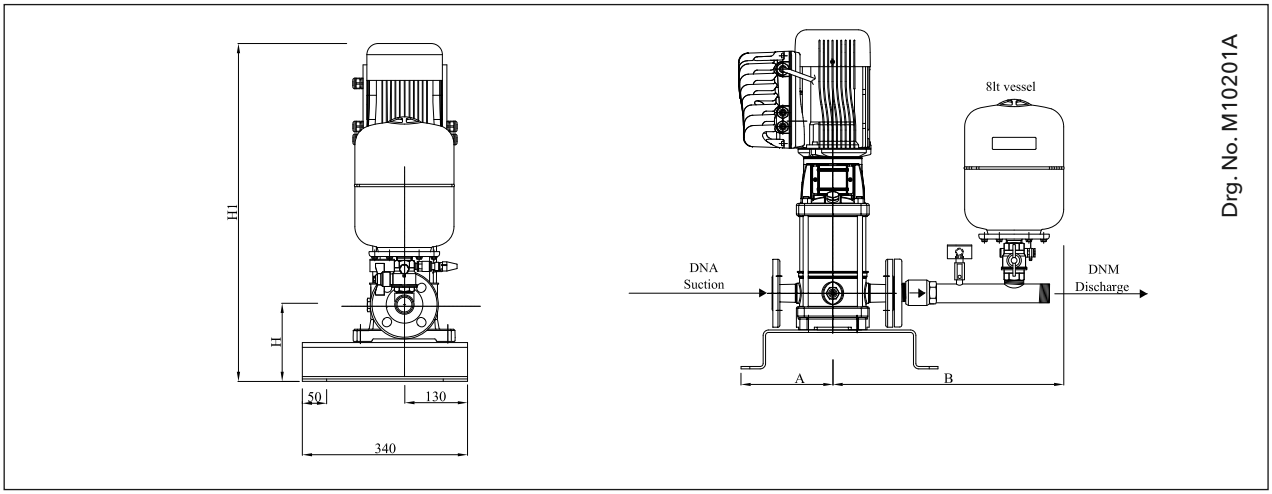

GTKS10	DNA/DNM	A	B	H	H1	L	Kg
1SV02F003T	DN25	175	485	155	567	660	27
1SV03F003T	DN25	175	485	155	567	660	27.4
1SV04F003T	DN25	175	485	155	587	660	27.8
1SV05F003T	DN25	175	485	155	607	660	28.2
1SV06F003T	DN25	175	485	155	627	660	28.6
1SV07F003T	DN25	175	485	155	647	660	28.9
1SV08F005T	DN25	175	485	155	689	660	29.2
1SV09F005T	DN25	175	485	155	709	660	29.6
1SV10F005T	DN25	175	485	155	729	660	30
1SV11F005T	DN25	175	485	155	749	660	30.4
1SV12F007T	DN25	175	485	155	811	660	37.7
1SV13F007T	DN25	175	485	155	831	660	38.1
1SV15F007T	DN25	175	485	155	871	660	39
1SV17F011T	DN25	175	485	155	851	660	47
1SV19F011T	DN25	175	485	155	951	660	49.8
1SV22F011T	DN25	175	485	155	1011	660	51
3SV02F003T	DN25	175	485	155	567	660	26.8
3SV03F003T	DN25	175	485	155	567	660	27.2
3SV04F003T	DN25	175	485	155	587	660	27.6
3SV05F005T	DN25	175	485	155	629	660	28
3SV06F005T	DN25	175	485	155	649	660	30.4
3SV07F007T	DN25	175	485	155	711	660	30.8
3SV08F007T	DN25	175	485	155	731	660	35.9
3SV09F011T	DN25	175	485	155	751	660	38.4
3SV10F011T	DN25	175	485	155	771	660	38.8
3SV11F011T	DN25	175	485	155	791	660	39.2
3SV12F011T	DN25	175	485	155	811	660	39.6
5SV02F003T	DN32	175	485	155	557	660	27.2
5SV03F005T	DN32	175	485	155	604	660	29.7
5SV04F005T	DN32	175	485	155	624	660	30.1
5SV05F007T	DN32	175	485	155	696	660	35.5
5SV06F011T	DN32	175	485	155	716	660	37.6
5SV07F011T	DN32	175	485	155	746	660	38
5SV08F011T	DN32	175	485	155	766	660	38.5
10SV01F007T	DN40	190	500	160	700	690	39.4
10SV02F007T	DN40	190	500	160	700	690	40.3
10SV03F011T	DN40	190	500	160	732	690	43

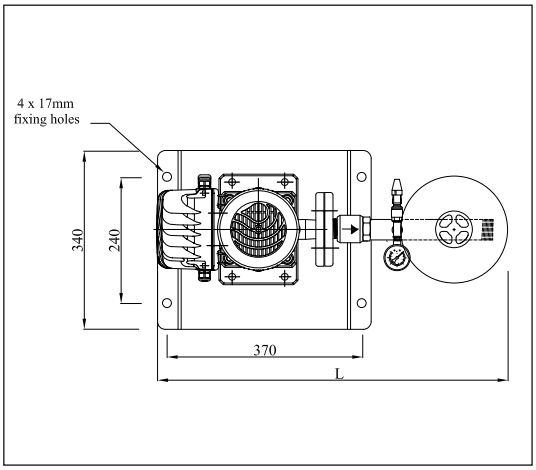

Dimensions in mm. Tolerance ± 10mm.

GTKS10/1SV - 5SV BOOSTER SET DIMENSION
R VERSION

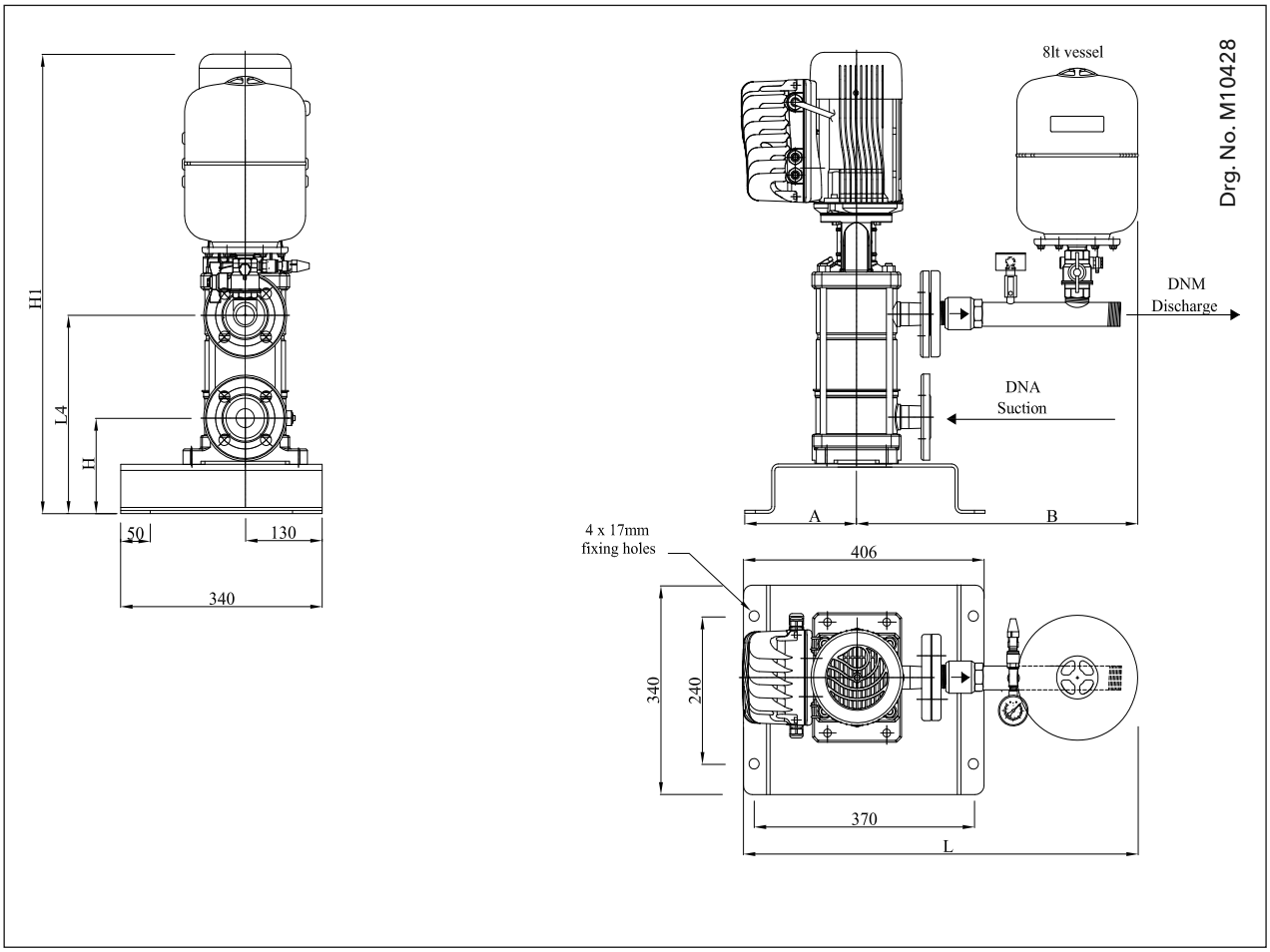

GTKS10	DNA/ DNM	A	B	H	H1	L	L	Kg
1SV07R003T	DN25	175	485	155	647	660	287	28.9
1SV08R005T	DN25	175	485	155	689	660	307	29.2
1SV09R005T	DN25	175	485	155	709	660	327	29.6
1SV10R005T	DN25	175	485	155	729	660	347	30
1SV11R005T	DN25	175	485	155	749	660	367	34.4
1SV12R007T	DN25	175	485	155	811	660	387	37.7
1SV13R007T	DN25	175	485	155	831	660	407	38.1
1SV15R007T	DN25	175	485	155	871	660	447	39
1SV17R011T	DN25	175	485	155	811	660	487	47
1SV19R011T	DN25	175	485	155	851	660	527	49.8
1SV22R011T	DN25	175	485	155	911	660	587	51
3SV07R007T	DN25	175	485	155	711	660	287	30.8
3SV08R007T	DN25	175	485	155	731	660	307	35.9
3SV09R011T	DN25	175	485	155	751	660	327	38.4
3SV10R011T	DN25	175	485	155	771	660	347	38.8
3SV11R011T	DN25	175	485	155	791	660	367	39.2
3SV12R011T	DN25	175	485	155	811	660	387	39.6
5SV07R011T	DN32	175	485	155	746	660	322	38
5SV08R011T	DN32	175	485	155	766	660	342	38.5

Dimensions in mm. Tolerance ± 10mm.

GTKS20 SERIES BOOSTER SET DIMENSIONS
HMP AND HMS HORIZONTAL PUMPS

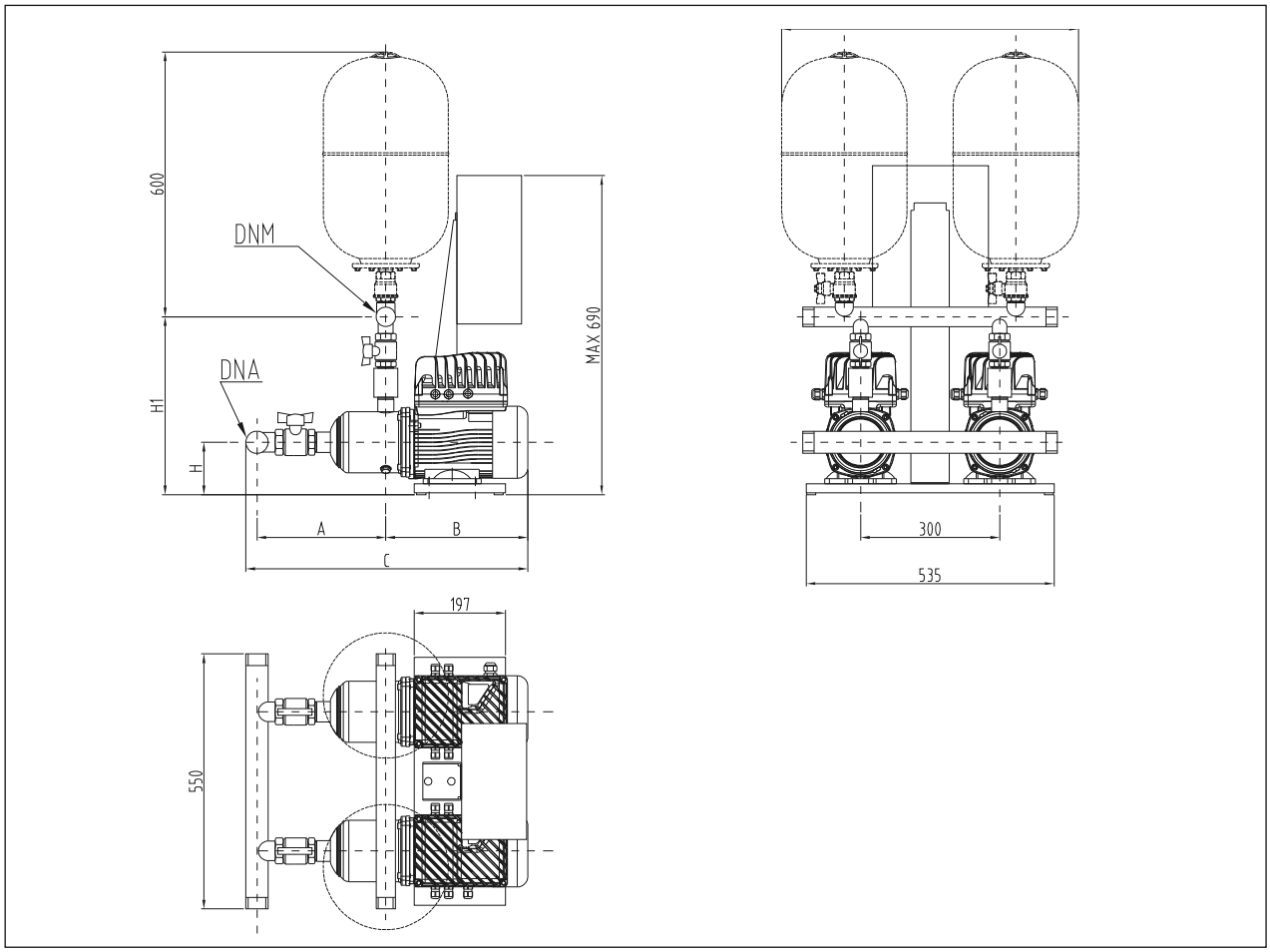

GTKS20	DNA	DNM	A	B	C	H	H1	Kg
1HM03P03T	R1¼"	R1¼"	198	257	476	90	383	68
1HM04P04T	R1¼"	R1¼"	218	257	496	90	383	70
1HM05P05T	R1¼"	R1¼"	238	257	516	90	383	72
1HM06P07T	R1¼"	R1¼"	258	263	542	90	383	82
3HM02P03T	R1¼"	R1¼"	198	257	476	90	383	68
3HM03P04T	R1¼"	R1¼"	198	257	476	90	383	68
3HM04P05T	R1¼"	R1¼"	218	257	496	90	383	70
3HM05P07T	R1¼"	R1¼"	238	263	522	90	383	80
3HM06P11T	R1¼"	R1¼"	258	263	542	90	383	82
5HM05P11T	R2"	R1½"	264	263	557	90	386	82
1HM06S03T	R1¼"	R1¼"	258	257	536	90	383	82
3HM04S03T	R1¼"	R1¼"	218	257	496	90	383	70
3HM05S04T	R1¼"	R1¼"	238	257	516	90	383	80
3HM06S05T	R1¼"	R1¼"	258	257	516	90	383	82
5HM02S03T	R2"	R1½"	234	282	546	90	386	68
5HM03S04T	R2"	R1½"	239	257	526	90	386	70
5HM04S05T	R2"	R1½"	264	257	551	90	386	72
5HM05S07T	R2"	R1½"	289	308	627	90	386	82

Dimensions in mm. Tolerance ± 10mm.

GTKS20 BOOSTER SET DIMENSIONS
HMS HORIZONTAL PUMPS

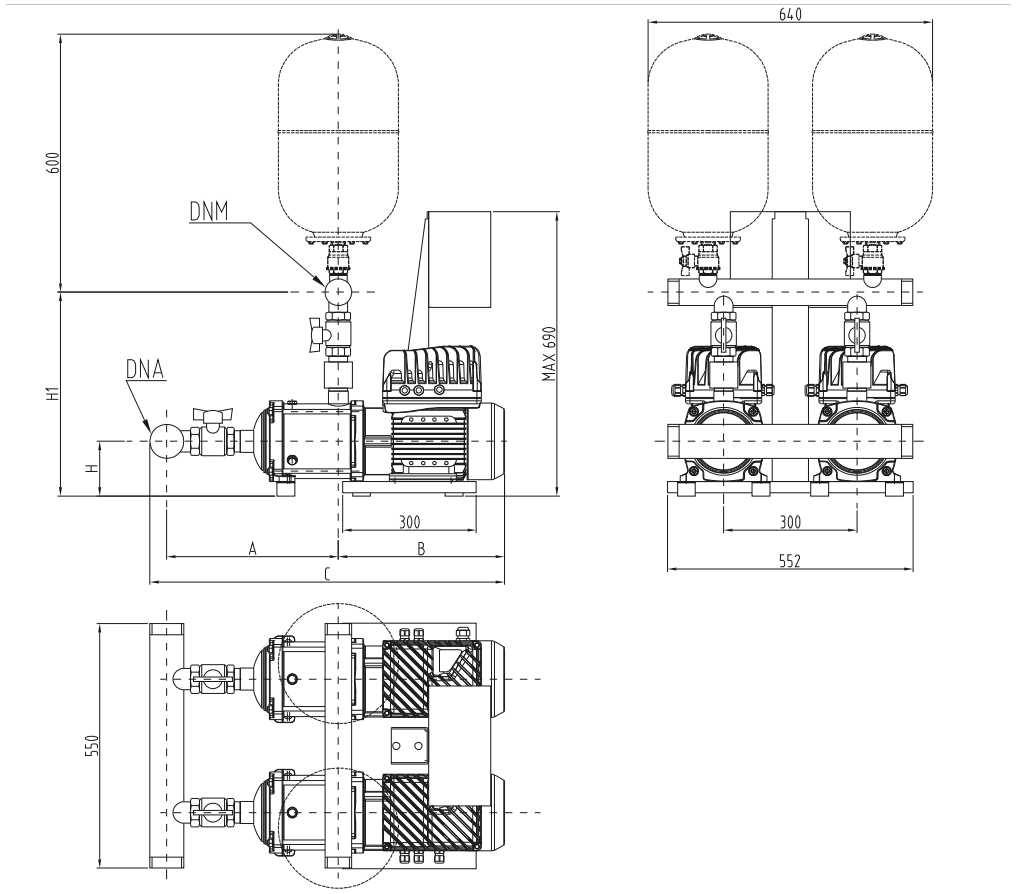

GTKS20	DNA	DNM	A	B	C	H	H1	Kg
3HM08S07T	R1¼"	R1¼"	282	273	576	123	393	86
3HM10S11T	R1¼"	R1¼"	322	351	660	123	393	90
3HM11S11T	R1¼"	R1¼"	342	371	680	123	393	92
3HM12S11T	R1¼"	R1¼"	362	391	700	123	393	92
3HM13S11T	R1¼"	R1¼"	382	411	720	123	393	92
5HM08S11T	R2"	R1½"	343	317	690	123	418	88
10HM02S07T	R2½"	R2"	290	318	646	123	441	88
10HM03S11T	R2½"	R2"	290	318	646	123	441	90

Dimensions in mm. Tolerance ± 10mm.

GTKS20 SERIES BOOSTER SET DIMENSIONS
F VERSION, WRAS APPROVED

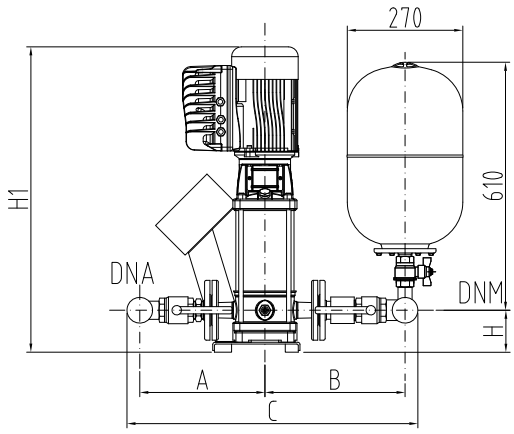

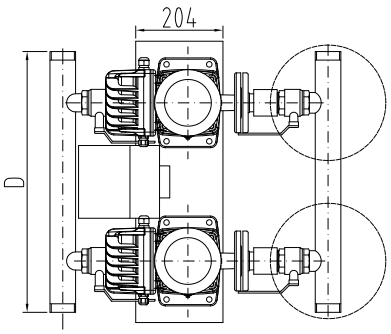

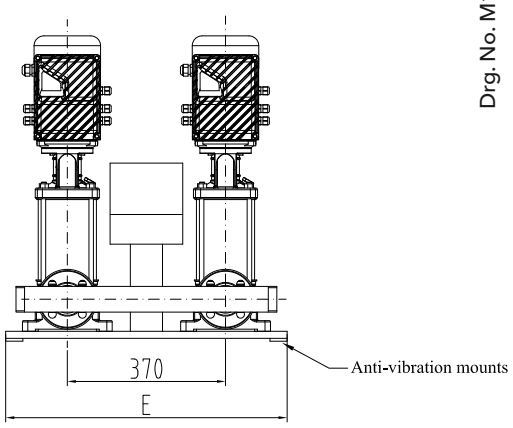

Drg. No. M10449A

Please Note:
Valve handles on 3SV sets are fitted with butterfly handles not lever as shown

WRAS APPROVED PRODUCT

GTKS20	DNA/DNM	A	B	C	D	E	H	H1	Kg
3SV05F005T	R2"	252	304	621	610	658	98	572	80
3SV06F005T	R2"	252	304	621	610	658	98	592	80
3SV07F007T	R2"	252	304	621	610	658	98	654	80
3SV08F007T	R2"	252	304	621	610	658	98	674	80
3SV09F011T	R2"	252	304	621	610	658	98	694	80
3SV10F011T	R2"	252	304	621	610	658	98	714	80
3SV11F011T	R2"	252	304	621	610	658	98	734	80
3SV12F011T	R2"	252	304	621	610	658	98	754	80
5SV03F005T	R2"	293	328	680	610	658	98	547	85
5SV04F005T	R2"	293	328	680	610	658	98	572	85
5SV05F007T	R2"	293	328	680	610	658	98	639	85
5SV06F011T	R2"	293	328	680	610	658	98	664	108
5SV07F011T	R2"	293	328	680	610	658	98	689	108
5SV08F011T	R2"	293	328	680	610	658	98	714	108
10SV03F011T	R2½"	297	362	735	610	682	114	686	98

Dimensions in mm. Tolerance ± 10mm.

GTKS20/3SV - 5SV BOOSTER SET DIMENSIONS
R VERSION, WRAS APPROVED

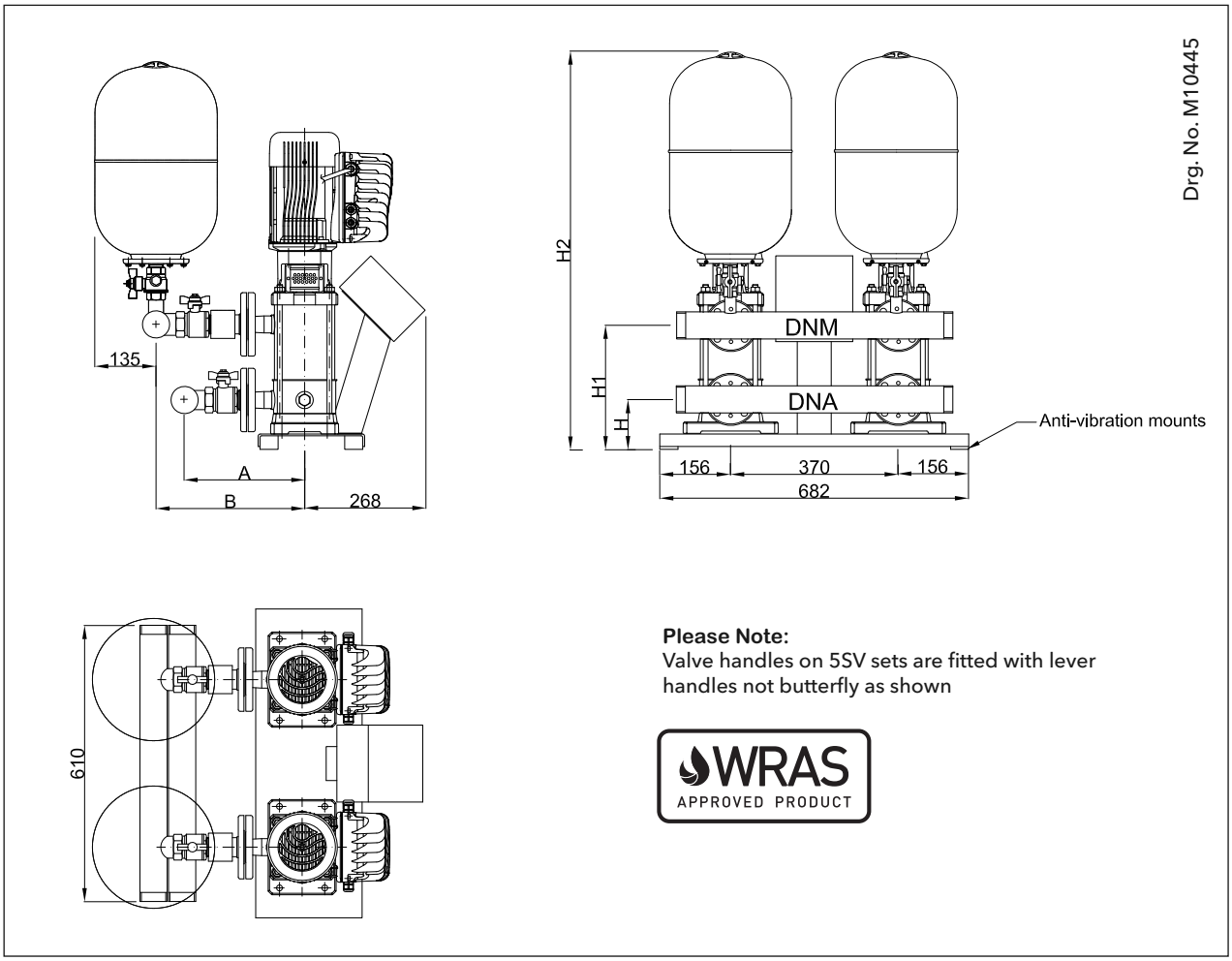

Please Note:
Valve handles on 5SV sets are fitted with lever handles not butterfly as shown

WRAS APPROVED PRODUCT

GTKS20	DNA/DNM	A	B	H	H1	H2	Kg
3SV07R007T	R2"	252	304	109	241	845	80
3SV08R007T	R2"	252	304	109	261	865	80
3SV09R011T	R2"	252	304	109	281	885	85
3SV10R011T	R2"	252	304	109	301	905	85
3SV11R011T	R2"	252	304	109	321	925	85
3SV12R011T	R2"	252	304	109	341	945	85
5SV07R011T	R2"	293	328	109	276	880	108
5SV08R011T	R2"	293	328	109	301	905	108

Dimensions in mm. Tolerance ± 10mm.

BG7 - BG11 SERIES, GTKS CURVES
OPERATING CHARACTERISTICS AT 50 Hz, 2 POLES

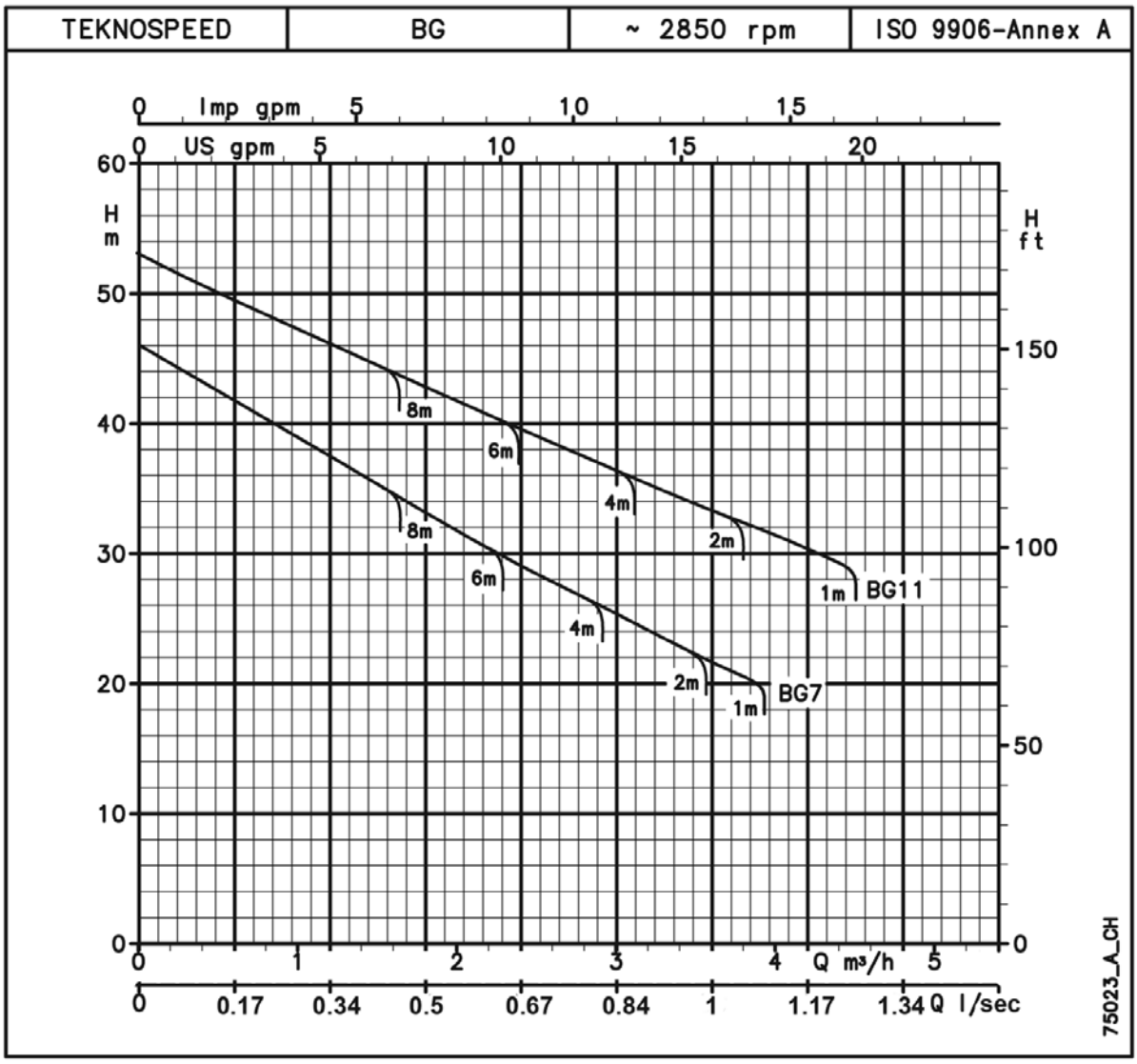

These performances are valid for liquids with density 1 kg/dm³ and kinematic viscosity 1 mm²/s.
Performance curves based on a single pump running, set losses are not included.

CEA SERIES, GTKS CURVES
OPERATING CHARACTERISTICS AT 50 Hz, 2 POLES

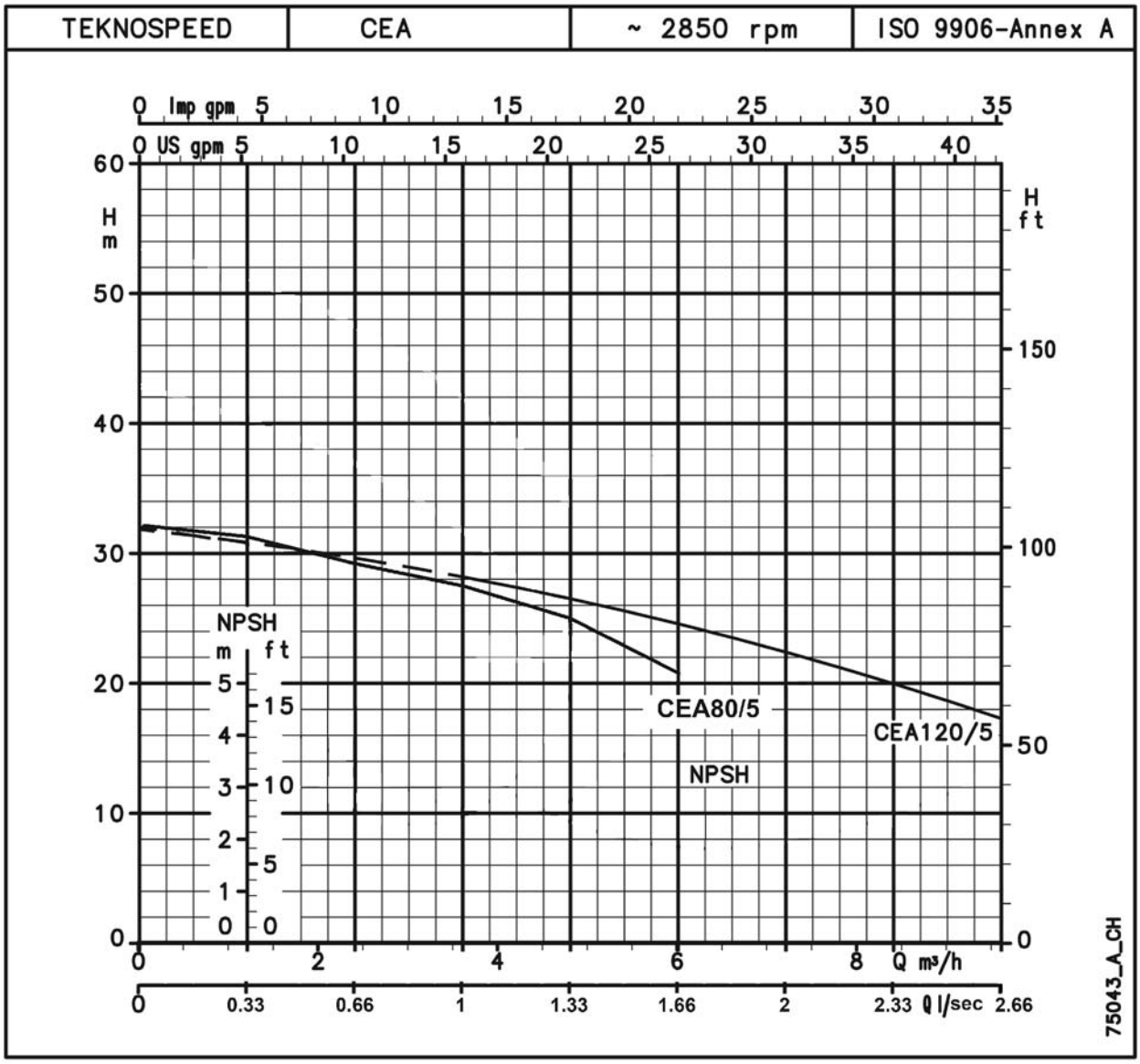

These performances are valid for liquids with density 1 kg/dm³ and kinematic viscosity 1 mm²/s.
Performance curves based on a single pump running, set losses are not included.

1HM..P SERIES, GTKS CURVES
OPERATING CHARACTERISTICS AT 50 Hz, 2 POLES

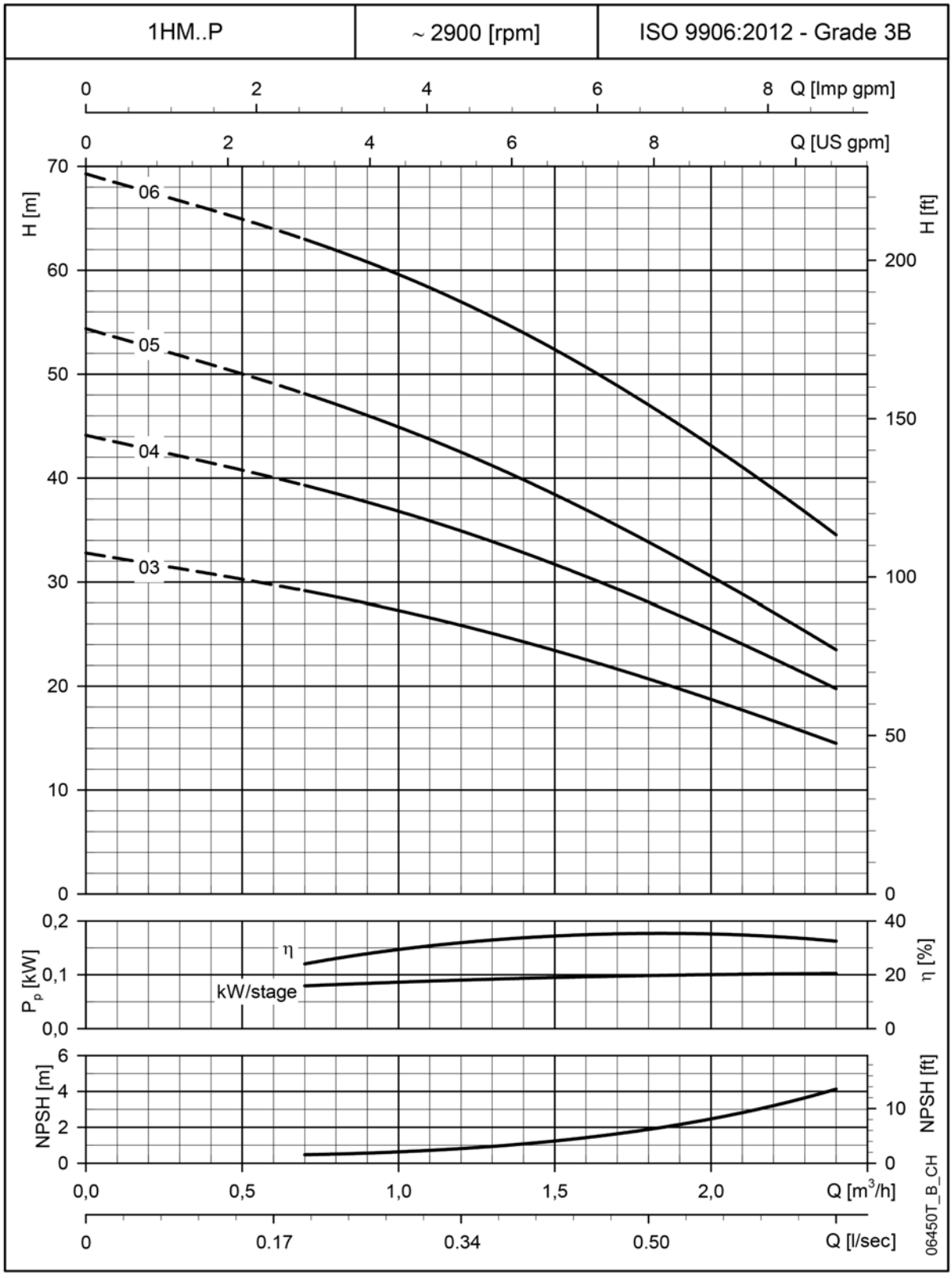

These performances are valid for liquids with density ρ = 1.0 kg/dm³ and kinematic viscosity ν = 1 mm²/s.
Performance curves based on a single pump running, set losses are not included.

3HM..P SERIES, GTKS CURVES
OPERATING CHARACTERISTICS AT 50 Hz, 2 POLES

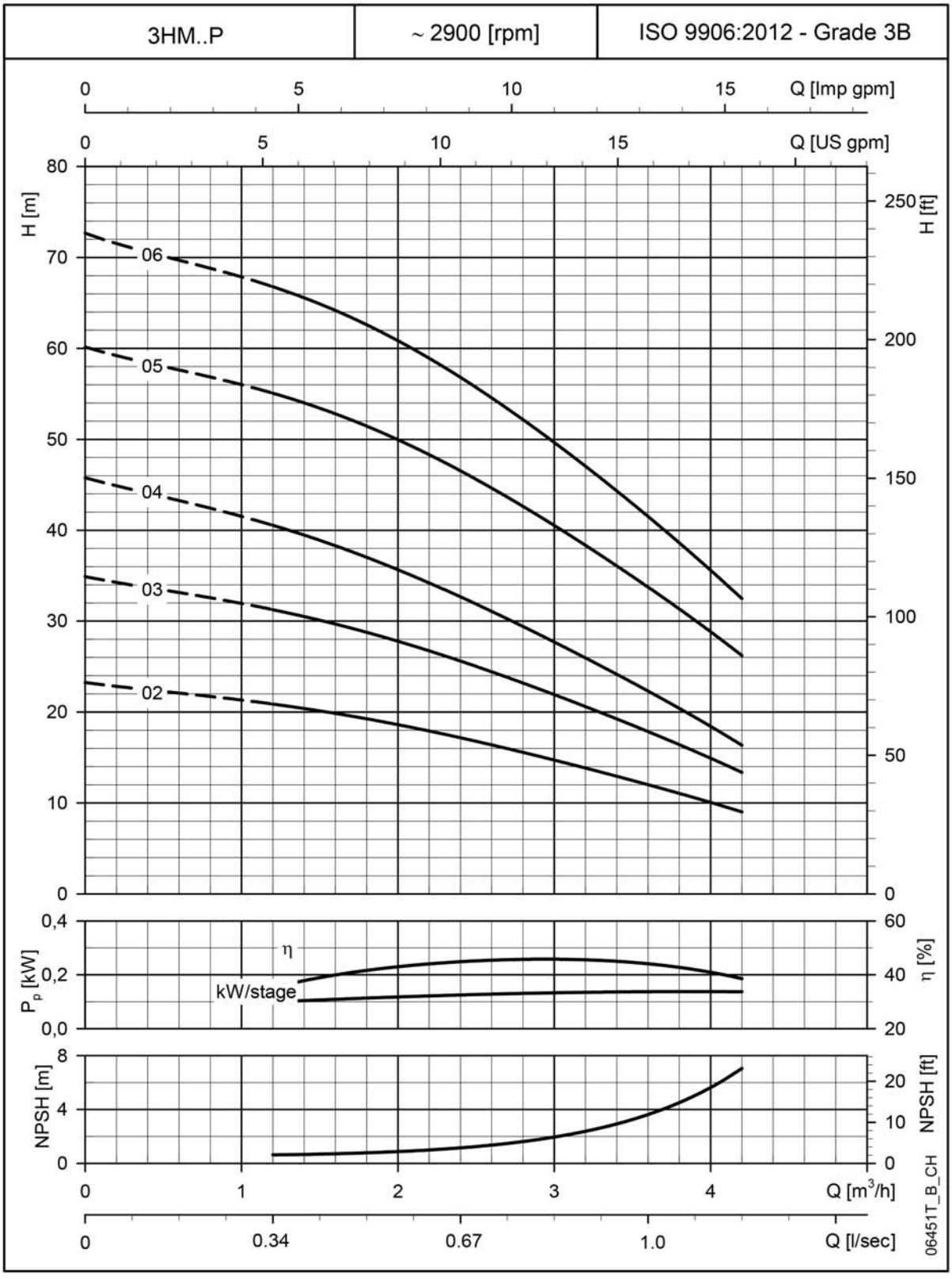

These performances are valid for liquids with density ρ = 1.0 kg/dm³ and kinematic viscosity ν = 1 mm²/s.
Performance curves based on a single pump running, set losses are not included.

5HM..P SERIES, GTKS CURVES
OPERATING CHARACTERISTICS AT 50 Hz, 2 POLES

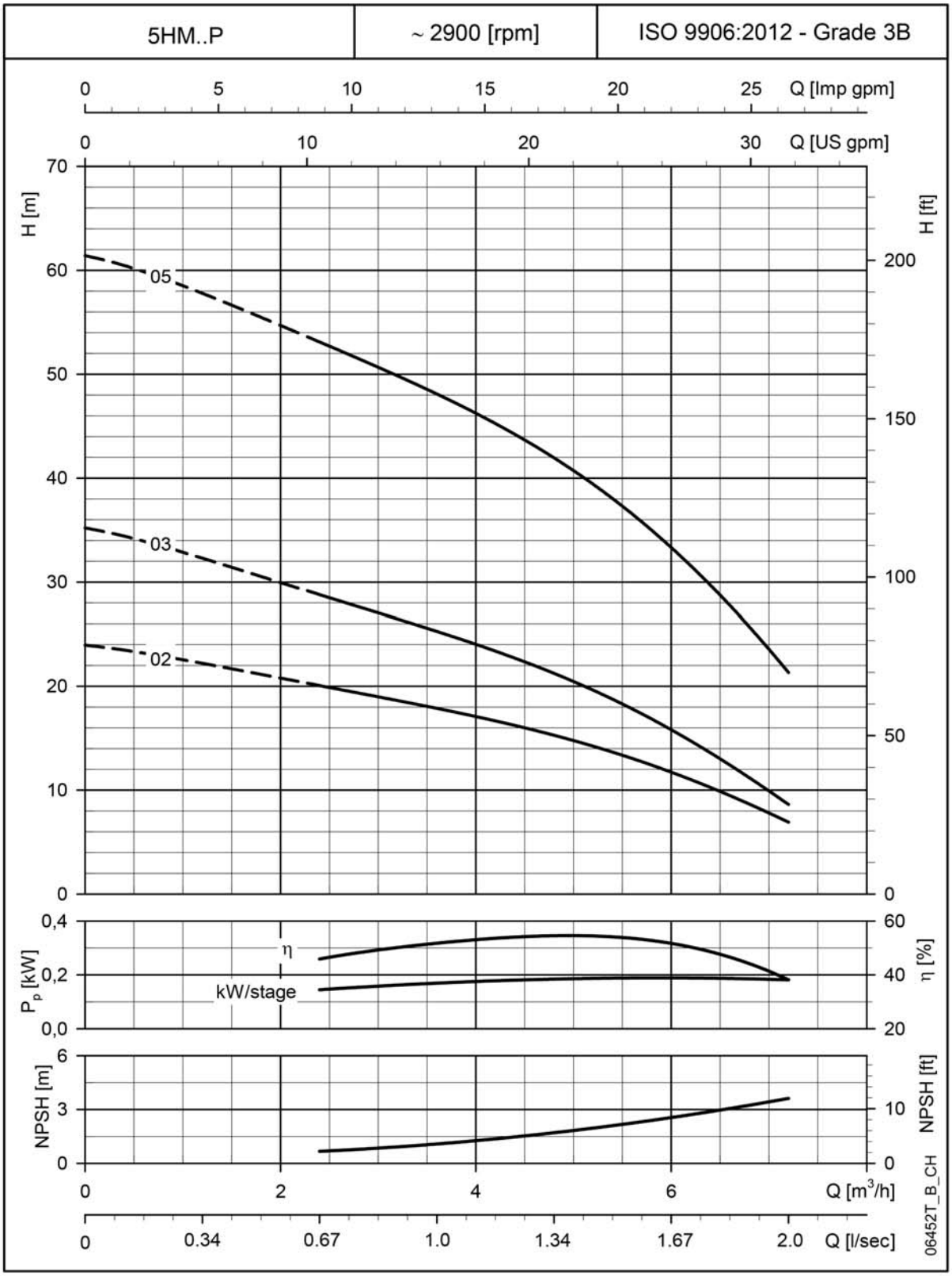

These performances are valid for liquids with density ρ = 1.0 kg/dm³ and kinematic viscosity ν = 1 mm²/s.
Performance curves based on a single pump running, set losses are not included.

1HM..S SERIES, GTKS CURVES
OPERATING CHARACTERISTICS AT 50 Hz, 2 POLES

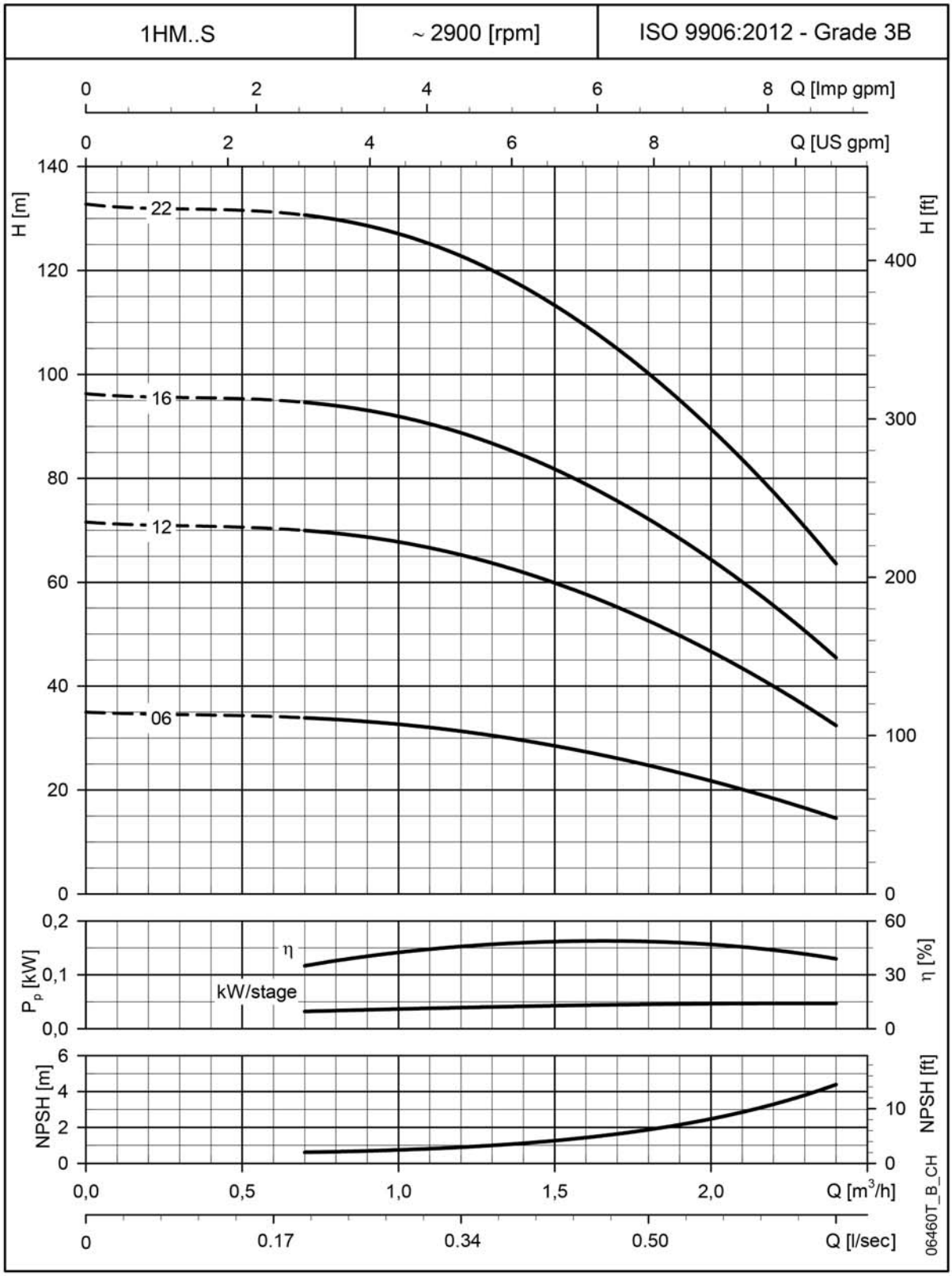

These performances are valid for liquids with density ρ = 1.0 kg/dm³ and kinematic viscosity ν = 1 mm²/s.
Performance curves based on a single pump running, set losses are not included.

3HM..S SERIES, GTKS CURVES
OPERATING CHARACTERISTICS AT 50 Hz, 2 POLES

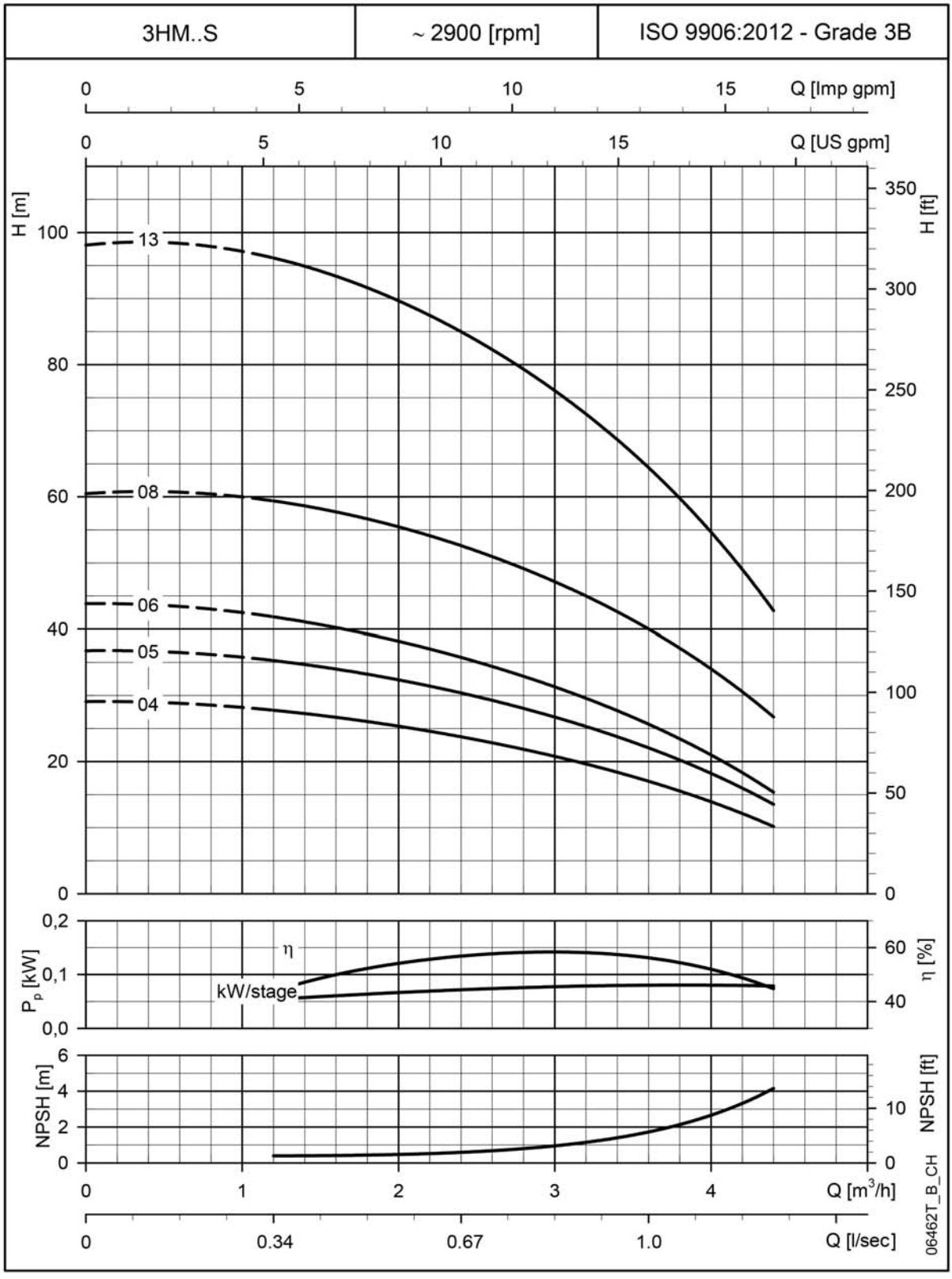

These performances are valid for liquids with density ρ = 1.0 kg/dm³ and kinematic viscosity ν = 1 mm²/s.
Performance curves based on a single pump running, set losses are not included.

5HM..S SERIES, GTKS CURVES
OPERATING CHARACTERISTICS AT 50 Hz, 2 POLES

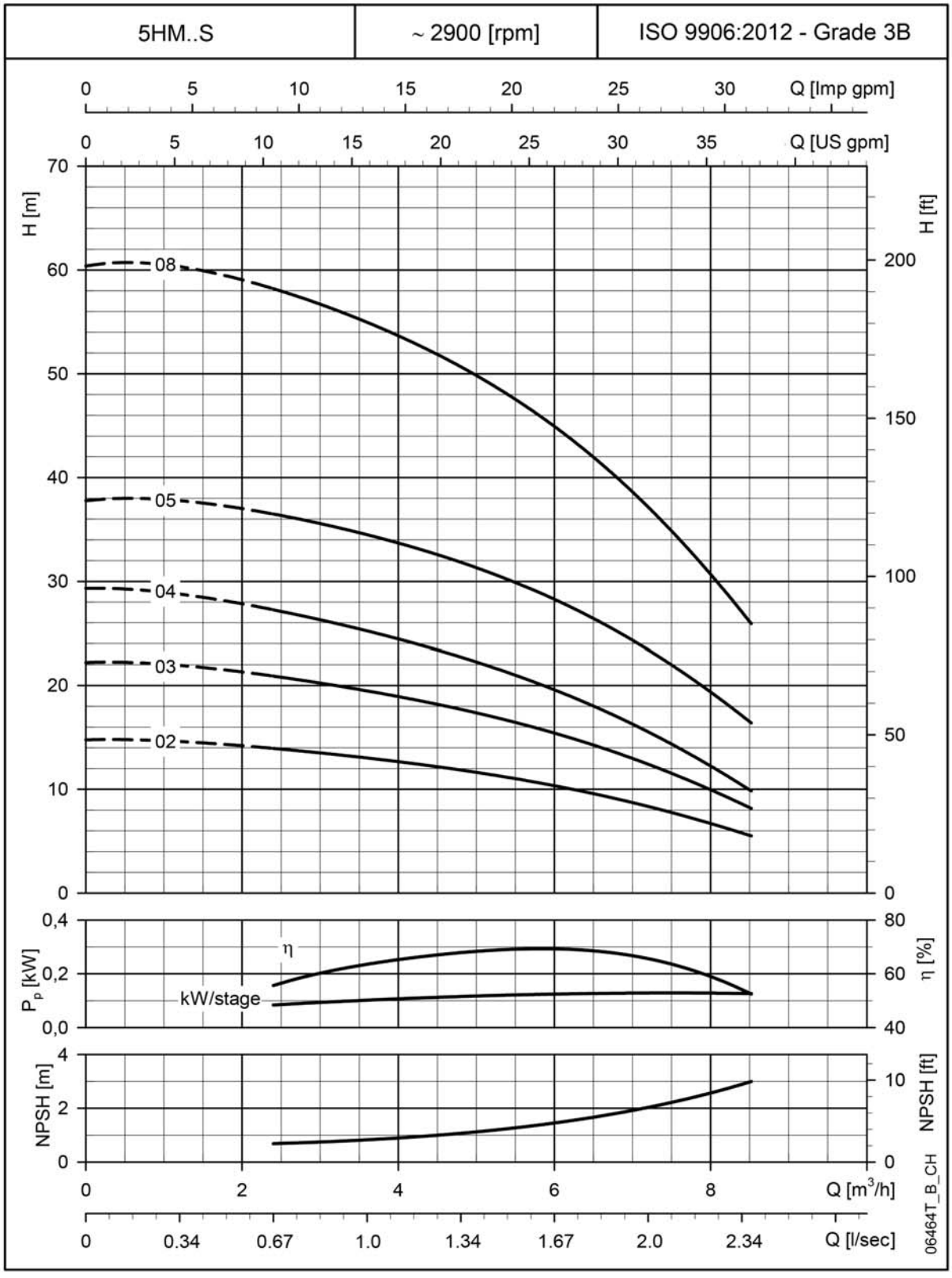

These performances are valid for liquids with density ρ = 1.0 kg/dm³ and kinematic viscosity ν = 1 mm²/s.
Performance curves based on a single pump running, set losses are not included.

10HM SERIES, GTKS CURVES
OPERATING CHARACTERISTICS AT 50 Hz, 2 POLES

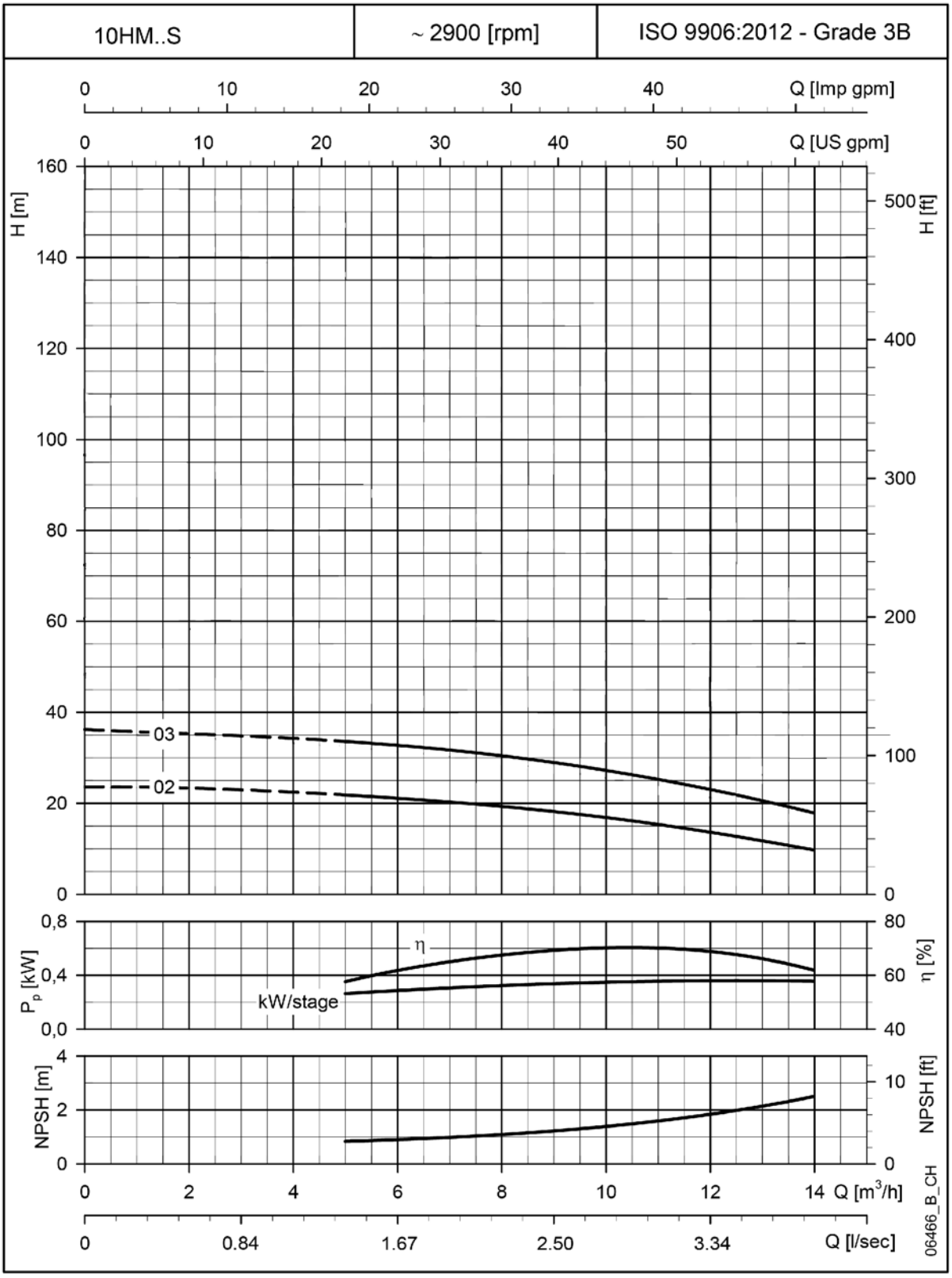

These performances are valid for liquids with density ρ = 1.0 kg/dm³ and kinematic viscosity ν = 1 mm²/s.
Performance curves based on a single pump running, set losses are not included.

1SV SERIES, GTKS CURVES
OPERATING CHARACTERISTICS AT 50 Hz, 2 POLES

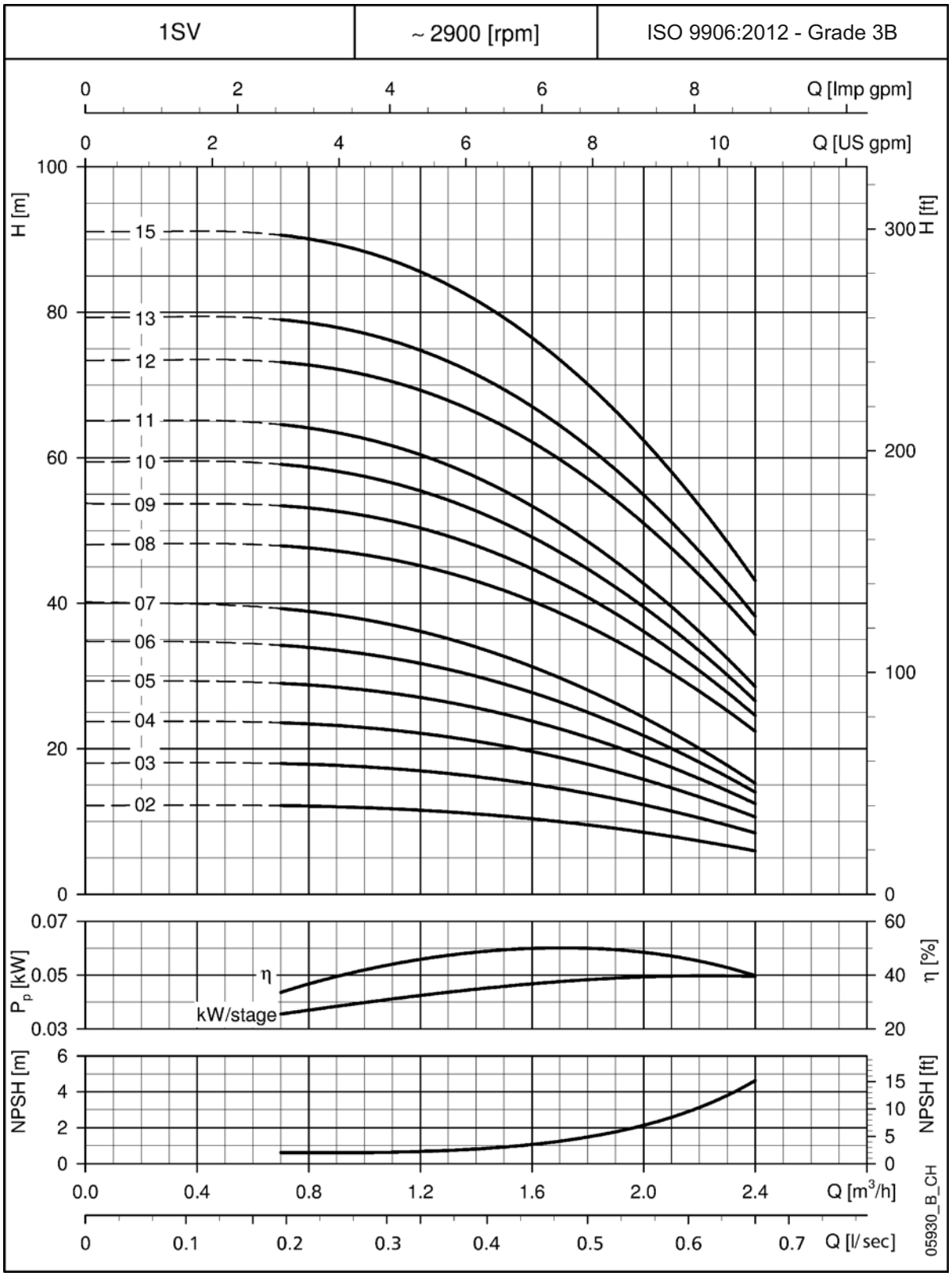

These performances are valid for liquids with density ρ = 1.0 kg/dm³ and kinematic viscosity ν = 1 mm²/s.
Performance curves based on a single pump running, set losses are not included.

1SV SERIES, GTKS CURVES
OPERATING CHARACTERISTICS AT 50 Hz, 2 POLES

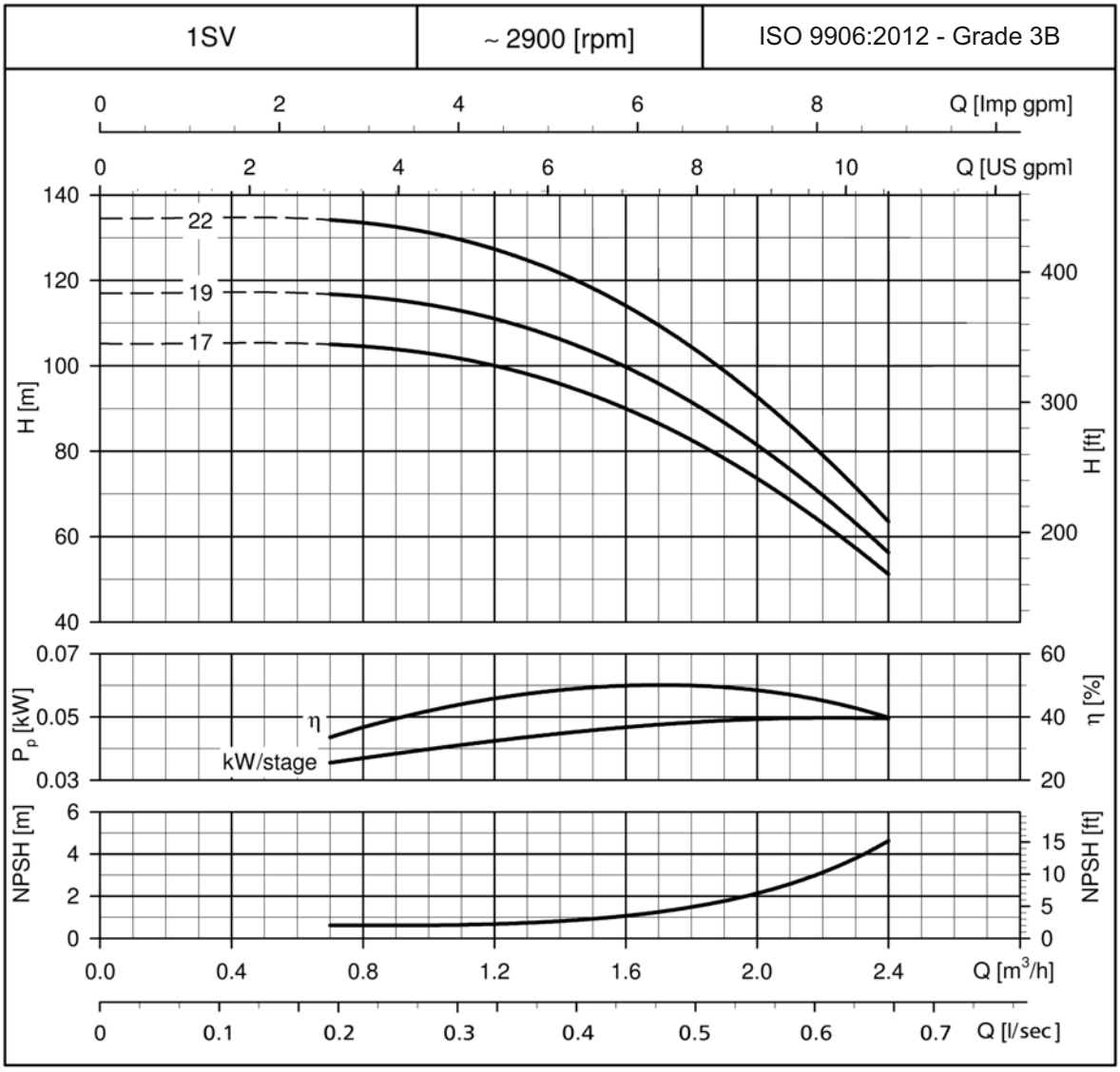

These performances are valid for liquids with density equal to 1 kg/dm³ and kinematic viscosity 1 mm²/s.
Performance curves based on a single pump running, set losses are not included.

3SV SERIES, GTKS CURVES
OPERATING CHARACTERISTICS AT 50 Hz, 2 POLES

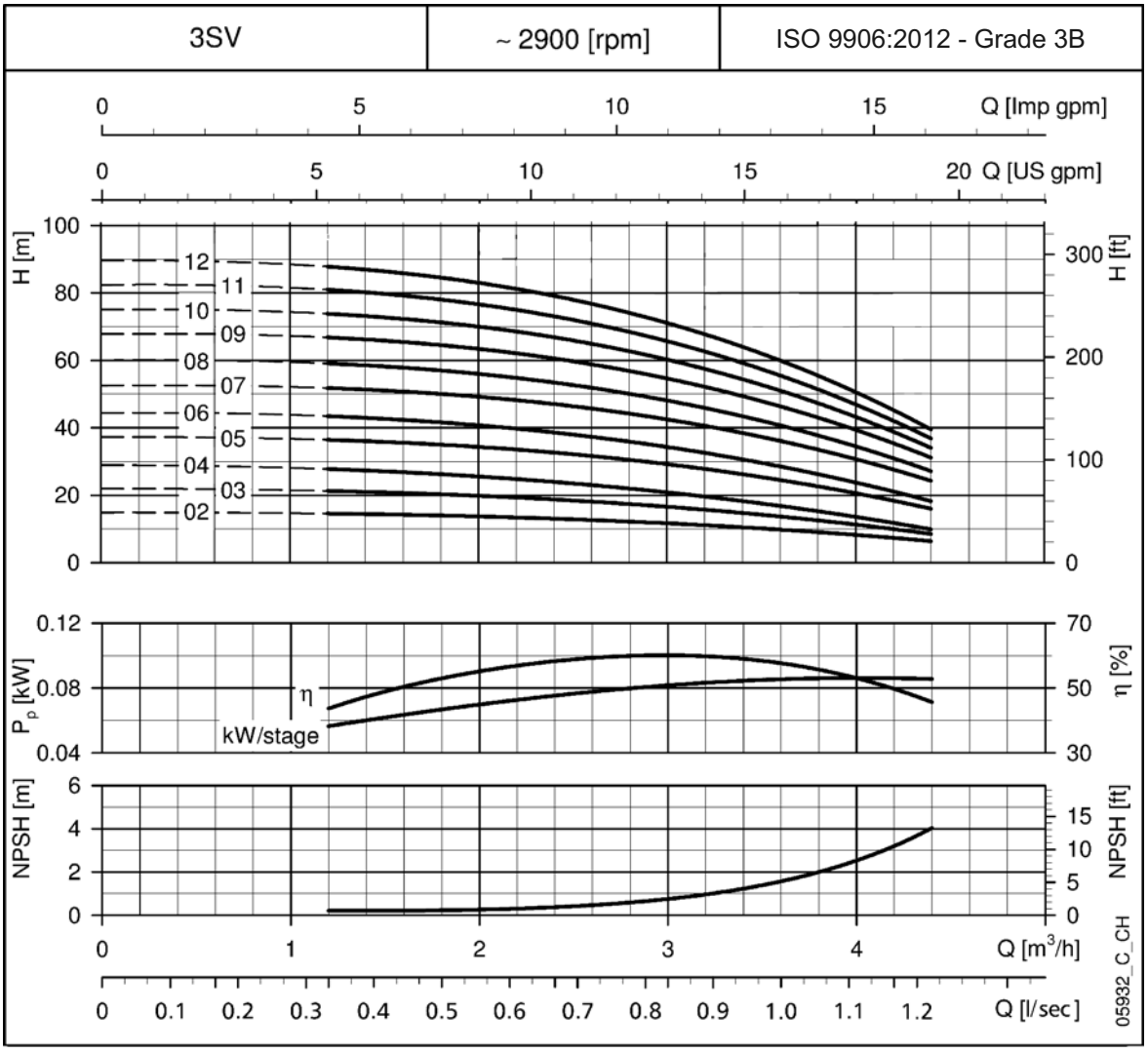

These performances are valid for liquids with density ρ = 1000 kg/m³ and kinematic viscosity ν = 1 mm²/s.
Performance curves based on a single pump running, set losses are not included.

5SV SERIES, GTKS CURVES
OPERATING CHARACTERISTICS AT 50 Hz, 2 POLES

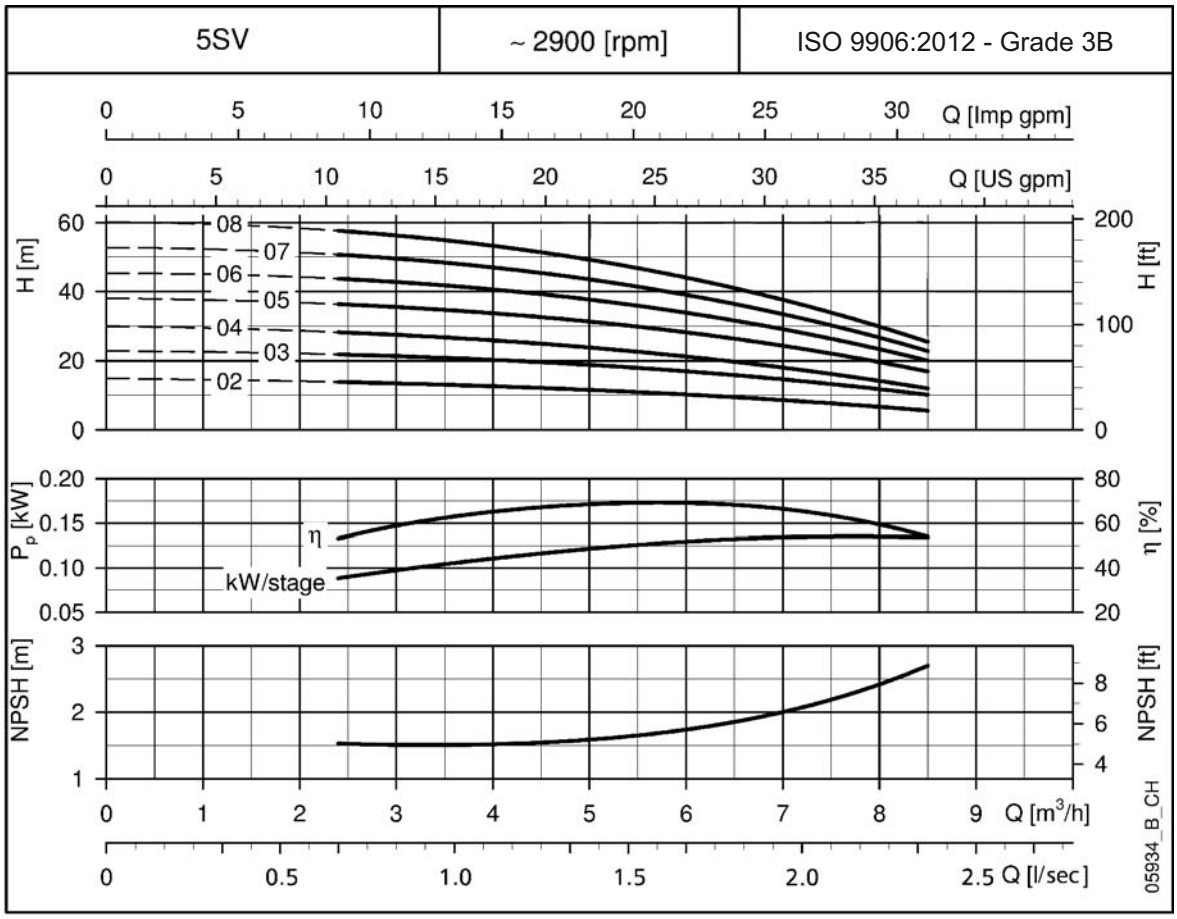

These performances are valid for liquids with density 1000 kg/m³ and kinematic viscosity 1 mm²/s.
Performance curves based on a single pump running, set losses are not included.

10SV SERIES, GTKS CURVES
OPERATING CHARACTERISTICS AT 50 Hz, 2 POLES

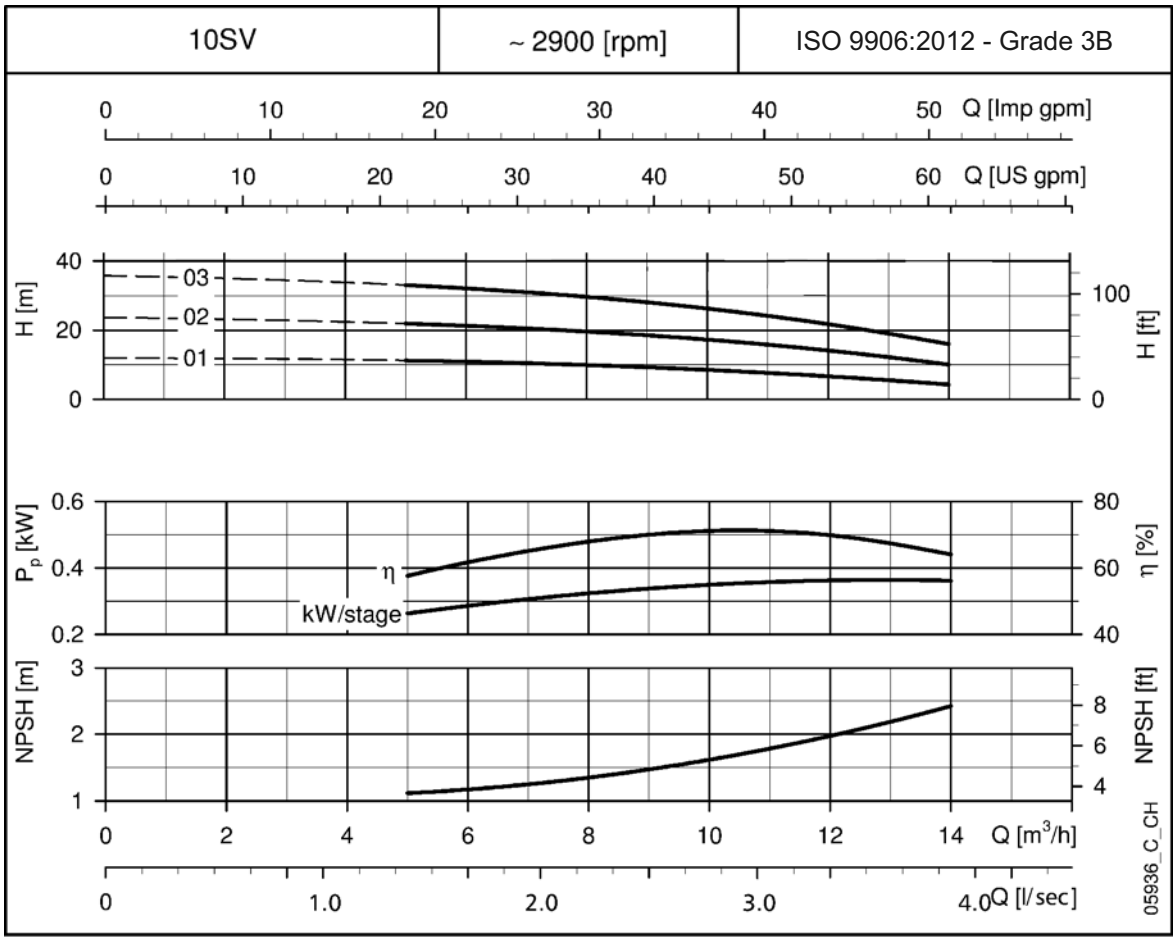

These performances are valid for liquids with density ρ = 1000 kg/m³ and kinematic viscosity ν = 1 mm²/s.
Performance curves based on a single pump running, set losses are not included.

LOWARA
a xylem brand

GHV10 - GHV40 SERIES BOOSTER SET

Multi pump variable speed water booster sets
with vertical multistage pumps.
GHV20-40 up to 22SV sets WRAS approved

WRAS APPROVED PRODUCT

WRAS APPROVED PRODUCT

SPECIFICATIONS
Number of pumps: up to 4 x 22 kW.
Delivery: up to 400 m^3/h
Head: up to 150 m
Input voltage of panel
1 x 230 V 50 Hz (single-phase)
3 x 400 V 50 Hz (three-phase)
Water temperature: 0°C to +80°C
Pump type: vertical

MATERIALS
Pump: Stainless steel
Manifold: AISI 304 stainless steel

WRAS approved booster sets
ON/OFF valves: Nickel plated brass
Non return valves: Brass
Pressure transmitters: Stainless AISI 316
Base plates. F version up to 10SV: Galvanised Steel
Base plates. F version 15SV and above: Painted Steel
Base plates. All R version sets: Painted Steel

WRAS complaint booster sets.
ON/OFF valves on sets up to 22SV:
Nickel plated brass
33SV sets and above: Polyamide
Non return valves up 10SV: Brass
Non return valves GHV10, 15SV and bove:
Painted cast iron with stainless steel flaps
Pressure transmitters: Stainless AISI 316
Base plates. F version up to 10SV:
Galvanised Steel
Base plates. F version 15SV and above:
Painted Steel
Base plates. All R version sets: Painted Steel

PRODUCT APPLICATIONS
- Water network supply in apartments, offices, hotels, shopping centres, factories.
- Water supply to agricultural water net works (e.g.irrigation).

GHV SERIES 'R' VERSION
Ideal for limited space plant rooms with small footprint and compact design.

GHV10 - GHV40 SERIES BOOSTER SET

MAIN COMPONENTS

- 1 - 4 multistage vertical pumps, e-SV series.
- Hydrovar® frequency converters mounted on the motor of each electric pump.
- Suction manifold made of AISI 304 stainless steel, with threaded or flanged ports depending on the size of pump (see drawings).
- Discharge manifold made of AISI 304 stainless steel, with threaded or flanged ports depending on the type of pump (see drawings).
  Fitted with R1" threaded couplings with caps to allow connection of 24-litre diaphragm tanks.
- A 24lt vessel is supplied for each pump fitted with isolation and drain valve. GHV20-40.
- GHV20-40 sets have on-off valves on suction and discharge ports of each pump, ball type with threaded coupling up to 2" are used on sets up to 22SV butterfly type are used on 33SV sets and above.
- Non-return valves on discharge side of each pump, spring – loaded type, with threaded coupling up to 2" on 33SV sets and above are fitted with wafer type non return valves.
- Pressure gauge and control transmitter on the pump's discharge side.
- All GHV20-40 sets are supplied with vibration damping feet.
- GHV10 sets are supplied without control panel.
  GHV20 - GHV40 are supplied with control panel made of painted steel, IP55 protection class, equipped with: Door interlocked isolator.
  - Thermal magnetic protectors for each inverter.
  - Low water protection, ready to connect to external low water device.

The panel provides protection against dry running and is ready for installation of an external device such as a minimum pressure switch, float switch or electrode probes.

All booster sets come Pre-assembled and tested, complete with operating instructions and panel wiring diagram.

GHV20-GHV30-GHV40 sets up to and including 22SV are WRAS approved, all other sets are WRAS compliant.
The main components in contact with the liquid are certificated suitable for drinking water or are made of AISI304 or higher grade of stainless steel.
GHV20-40 supplied with vibration damping feet. All sets come complete with 1 x 24Lt vessel for each pump.

Accessories available on request:

- Vibration dampers kit (GHV10 sets).
- Device against dry running in one of the following versions:
  float switch, for positive suction head;
  minimum pressure switch, for positive suction head;
  probe electrodes kit, for positive suction head.
- Break tank selector controls are available to enable one tank section to be taken off line for cleaning whilst maintaining continued use through a second tank section. Use suffix FS at end of booster set code to include this option.

IDENTIFICATION CODES

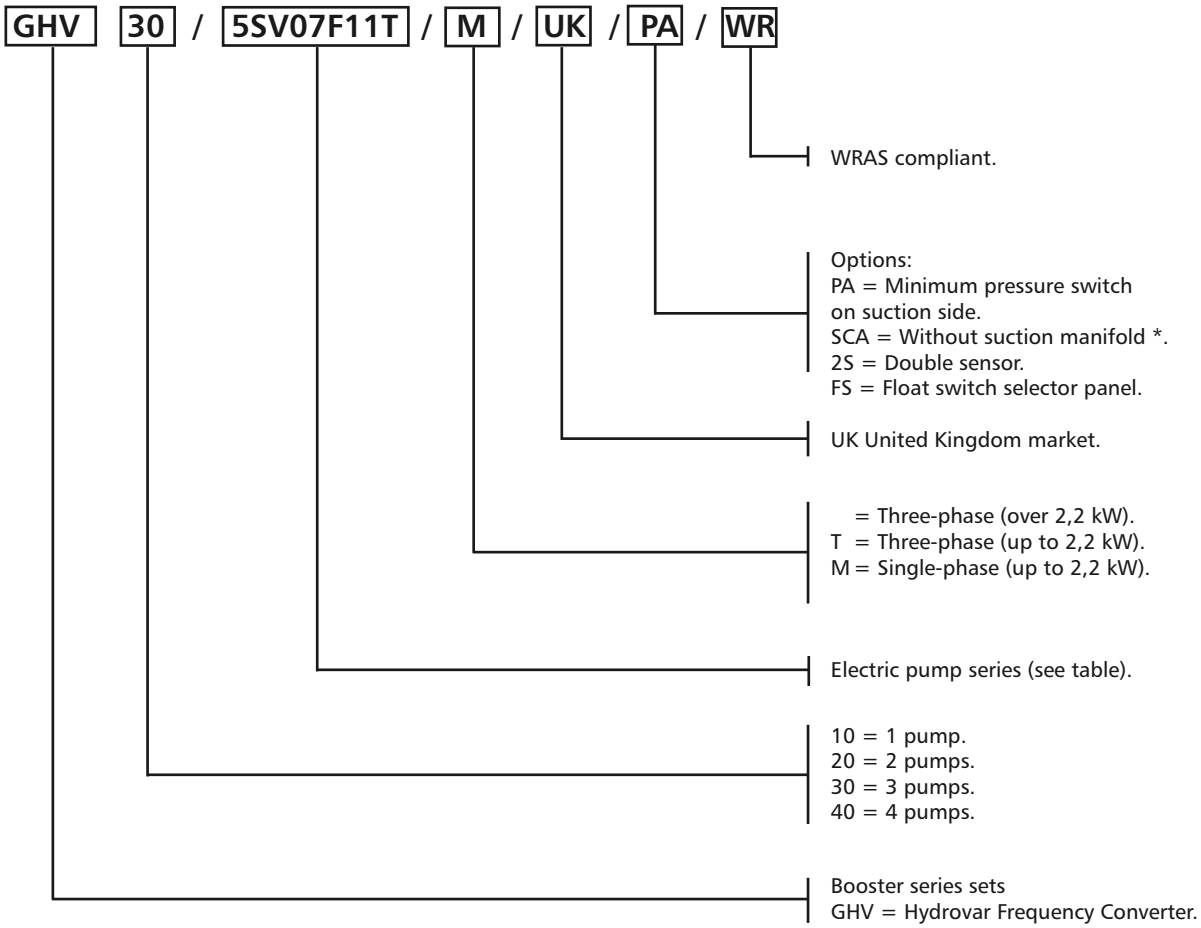

SPECIAL VERSIONS

Special versions featuring different material/operating temperatures and electrical panels with additional functions are available on request.

Booster Sets which are above 16bar pressure rating are available on request.

CONTROL PANEL AND BASIC CONNECTION DETAILS FOR GHV10 BOOSTER SETS

GHV10 single phase booster set 1.5-2.2Kw

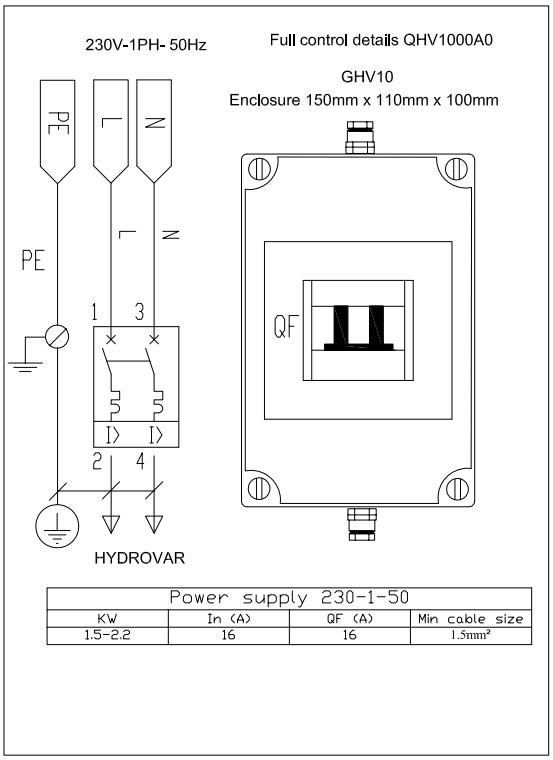

Power supply 230-1-50			
KW	In (A)	QF (A)	Min cable size
1.5-2.2	16	16	1.5mm²

GHV10 three phase booster set 2.2-45.0Kw

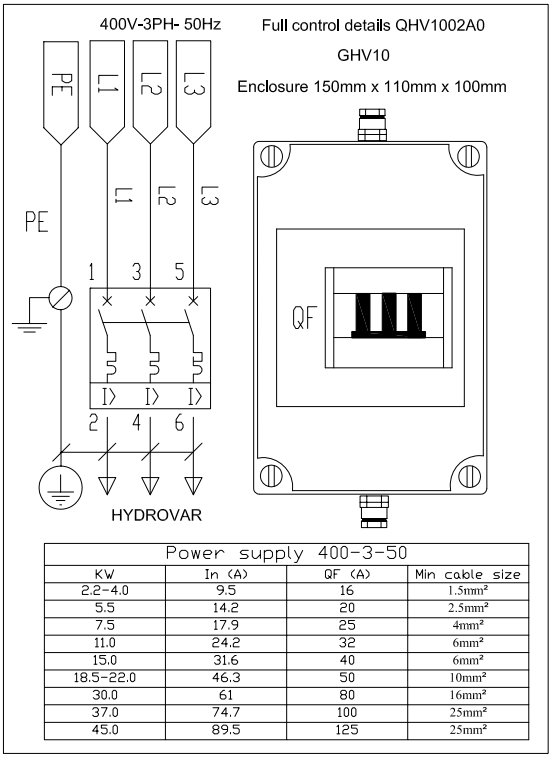

Power supply 400-3-50			
KW	In (A)	QF (A)	Min cable size
2.2-4.0	9.5	16	1.5mm²
5.5	14.2	20	2.5mm²
7.5	17.9	25	4mm²
11.0	24.2	32	6mm²
15.0	31.6	40	6mm²
18.5-22.0	46.3	50	10mm²
30.0	61	80	16mm²
37.0	74.7	100	25mm²
45.0	89.5	125	25mm²

Drg. No. C10041A-1

CONTROL PANEL AND BASIC CONNECTION DETAILS FOR GHV20 BOOSTER SETS

GHV20 single phase booster set 1.5-2.2Kw

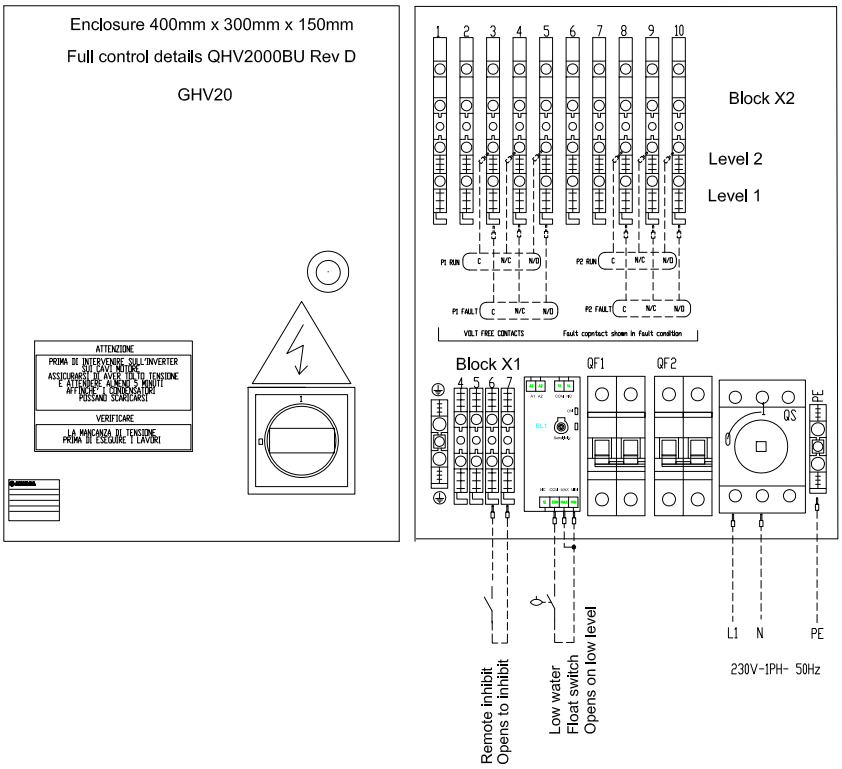

GHV20 three phase booster set 2.2-22Kw

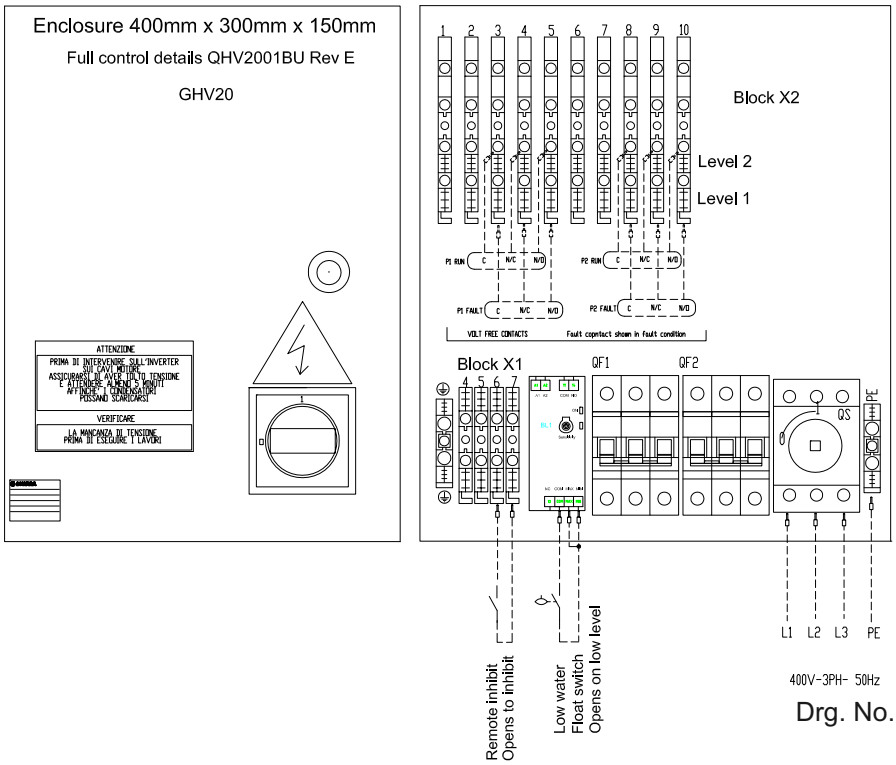

Drg. No. C10041A-1

CONTROL PANEL AND BASIC CONNECTION DETAILS FOR GHV30 BOOSTER SETS

GHV30 single phase booster set 1.5-2.2Kw

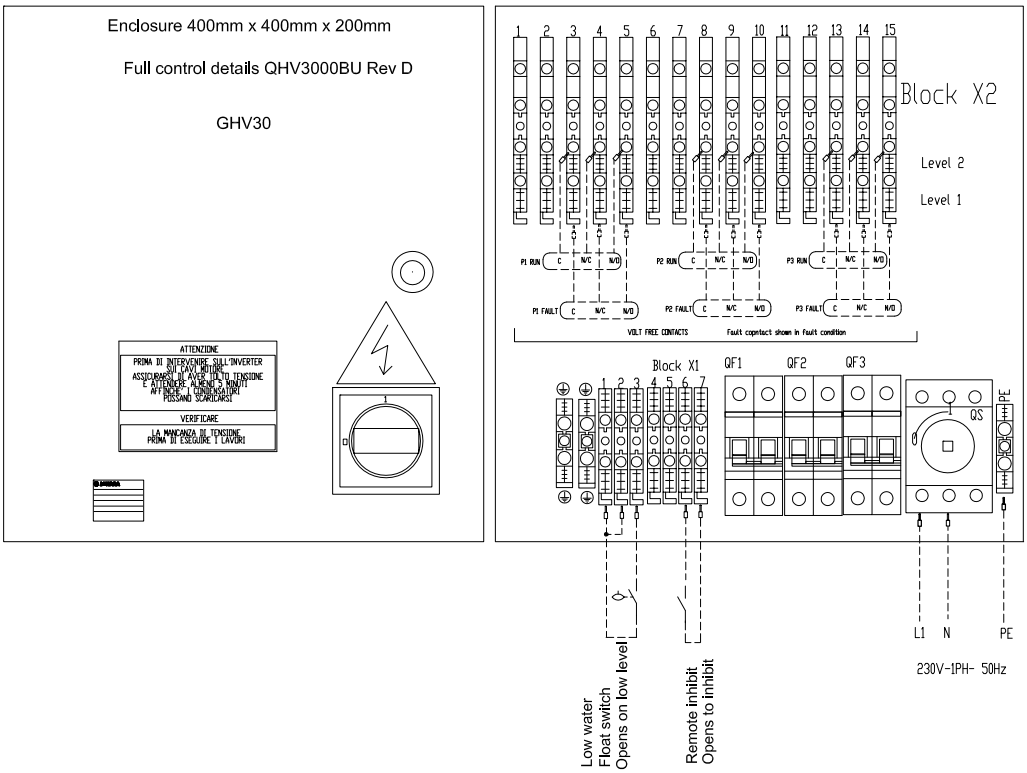

GHV30 three phase booster set 2.2-22Kw

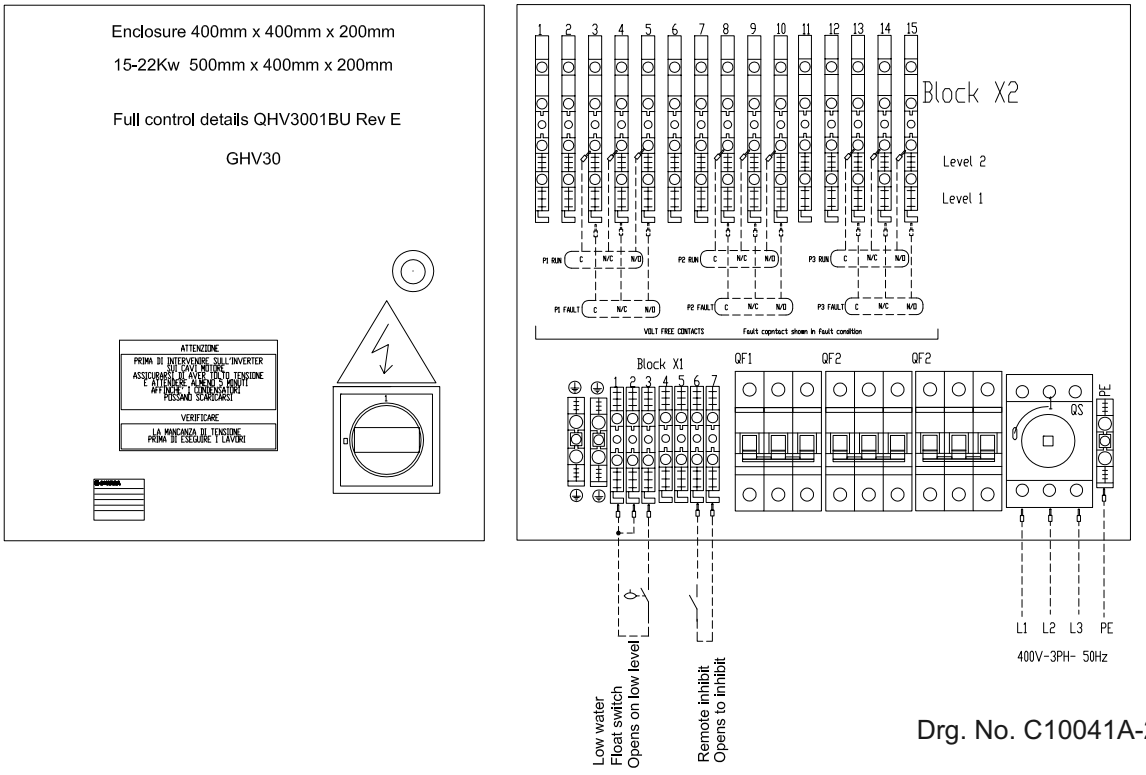

Drg. No. C10041A-2

CONTROL PANEL AND BASIC CONNECTION DETAILS FOR GHV40 BOOSTER SETS

GHV40 single phase booster set 1.5-2.2Kw

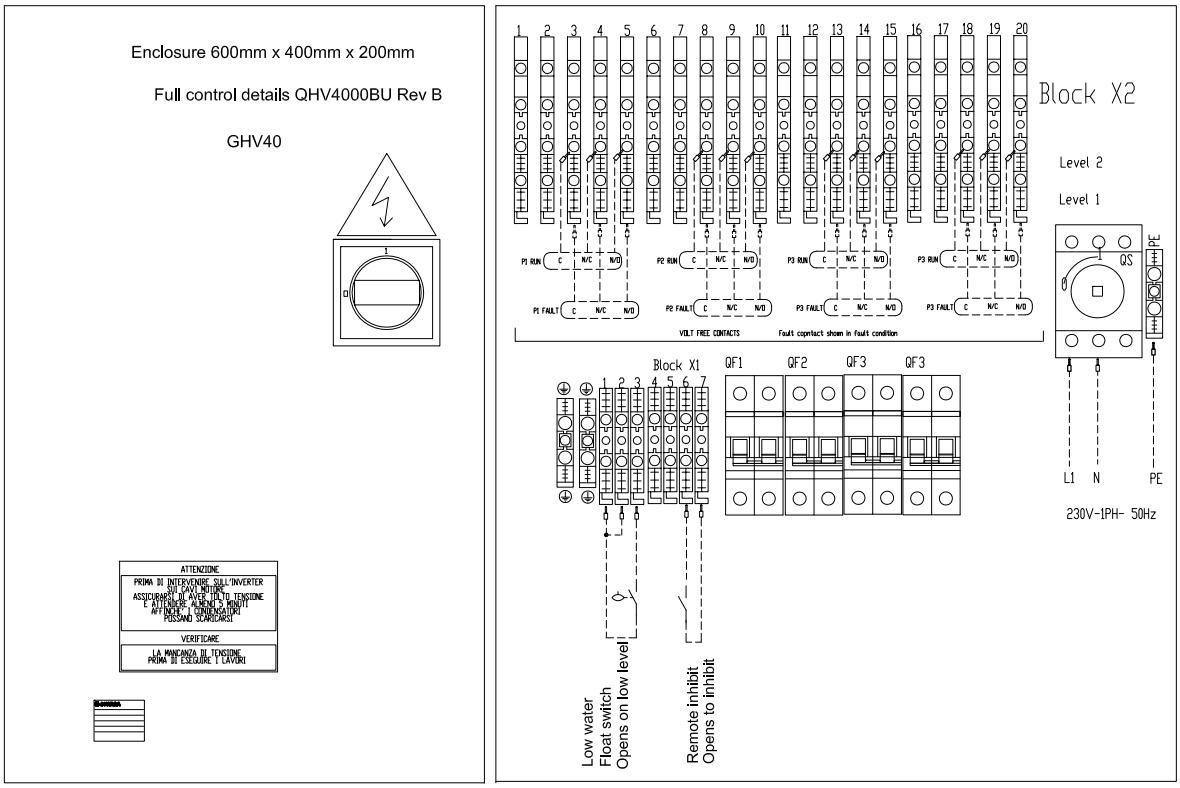

GHV40 three phase booster set 2.2-22Kw

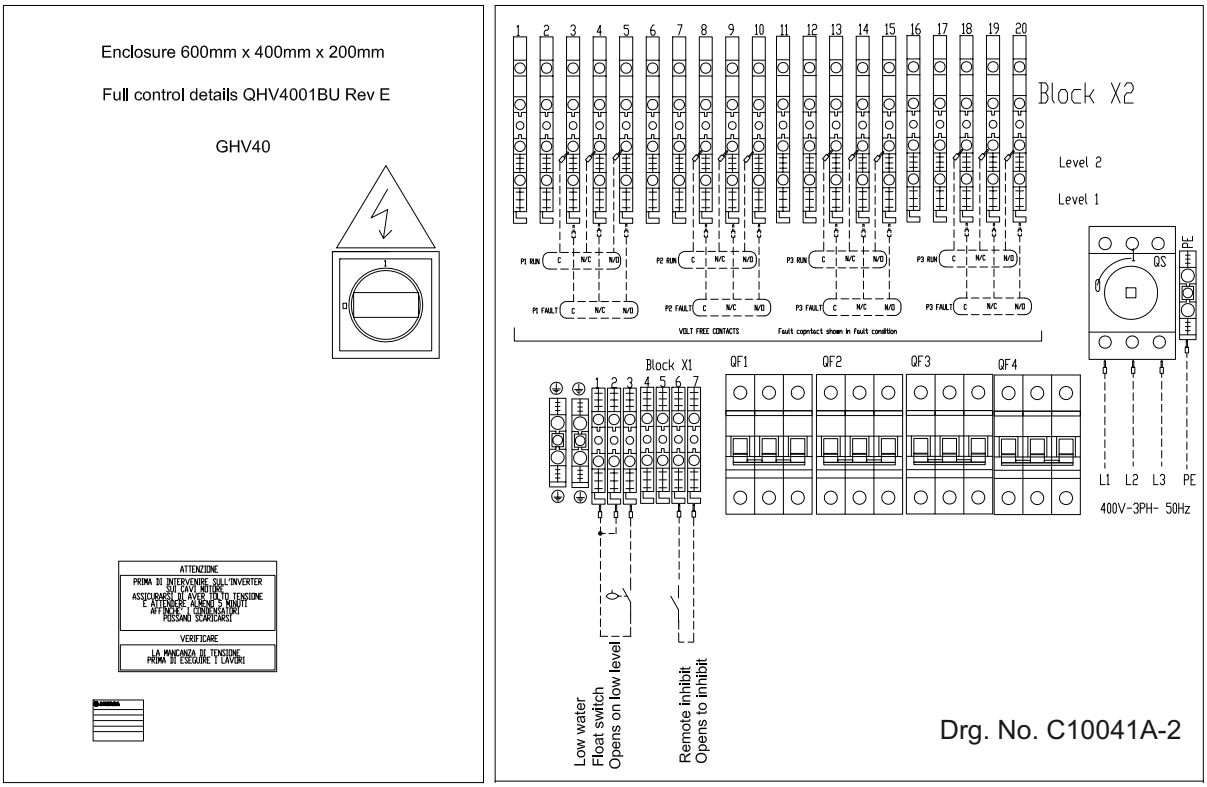

BREAK TANK SELECTOR PANEL

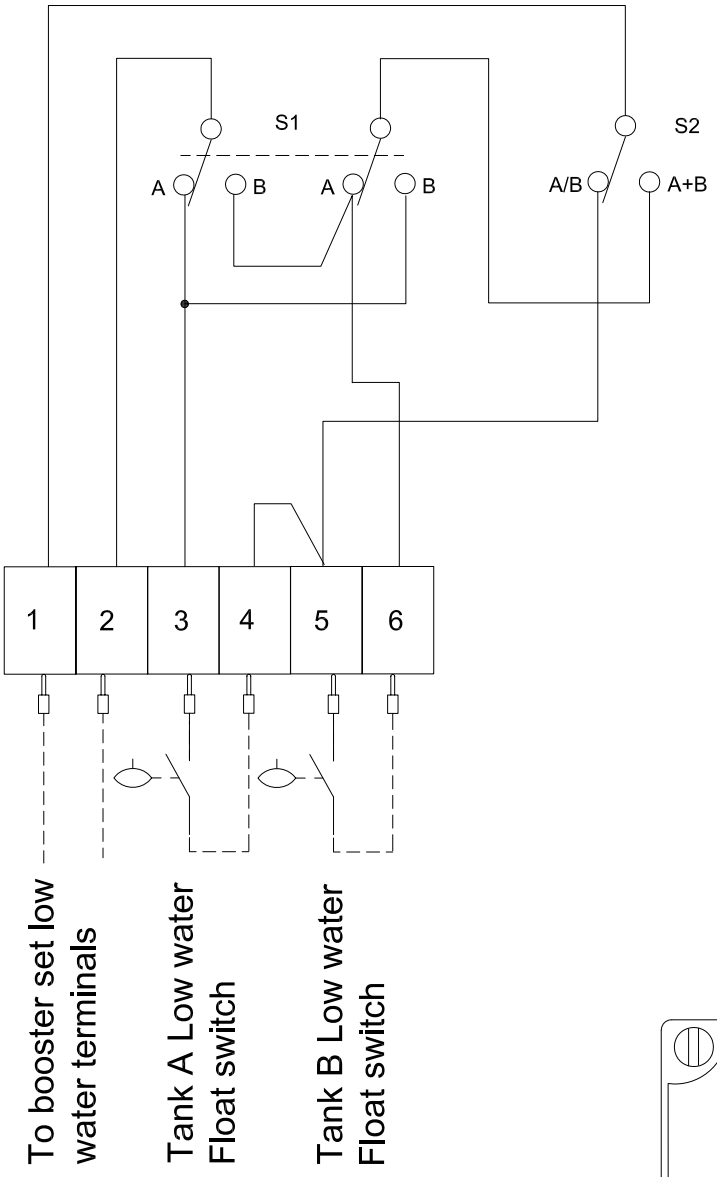

Float switches open on low level

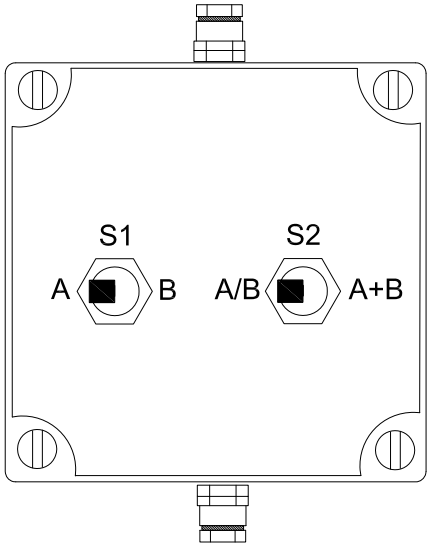

Enclosure 100mm x 100mm x 50mm

Drg. No. C10059

1, 3 and 5SV SERIES
HYDRAULIC PERFORMANCE TABLE AT 50 Hz, 2 POLES

PUMP TYPE	RATED POWER		Q = DELIVERY													
			l/min 0	12	20	25	30	35	40	45	50	60	73	100	120	141
			m^3/h 0	0.7	1.2	1.5	1.8	2.1	2.4	2.7	3	3.6	4.4	6.0	7.2	8.5
	kW	HP	H = TOTAL HEAD IN METRES OF COLUMN WATER													
1SV12	0.75	1	73.3	73.1	69.3	64.3	57.1	47.6	35.7							
1SV13	0.75	1	79.2	78.9	74.8	69.4	61.6	51.2	38.2							
1SV15	0.75	1	90.9	90.5	85.6	79.3	70.1	58.1	43.1							
1SV17	1.1	1.5	105.2	104.9	100.0	93.1	82.6	68.6	51.2							
1SV19	1.1	1.5	117.0	116.7	111.0	103.2	91.5	75.8	56.3							
1SV22	1.1	1.5	134.6	134.1	127.4	118.1	104.4	86.1	63.5							
1SV25	1.5	2	152.6	152.4	145.5	135.4	120.0	99.1	72.7							
3SV07	0.75	1	52.5		51.8	51.0	50.0	48.7	47.0	45.0	42.5	36.1	24.6			
3SV08	0.75	1	60.0		59.1	58.2	57.0	55.4	53.4	51.0	48.1	40.7	27.5			
3SV09	1.1	1.5	67.7		66.8	65.8	64.5	62.8	60.6	57.9	54.6	46.4	31.6			
3SV10	1.1	1.5	75.0		73.8	72.7	71.3	69.3	66.9	63.8	60.2	51.0	34.5			
3SV11	1.1	1.5	82.3		81.0	79.7	78.0	75.8	73.1	69.7	65.7	55.5	37.4			
3SV12	1.1	1.5	89.6		87.8	86.4	84.5	82.1	79.1	75.5	71.1	59.9	40.1			
3SV13	1.5	2	98.1		96.7	95.4	93.5	91.0	87.8	83.9	79.2	67.2	45.6			
3SV14	1.5	2	105.6		104.1	102.5	100.4	97.7	94.2	89.9	84.8	71.8	48.5			
3SV16	1.5	2	119.9		117.8	116.1	113.6	110.5	106.5	101.6	95.8	80.9	54.2			
3SV19	2.2	3	144.3		142.3	140.3	137.5	133.9	129.2	123.5	116.7	99.1	67.6			
3SV21	2.2	3	159.3		156.9	154.6	151.4	147.3	142.1	135.7	128.0	108.5	73.6			
5SV05	0.75	1	38.0						36.4	36.0	35.5	34.5	32.9	28.2	23.5	17.1
5SV06	1.1	1.5	45.3						43.7	43.3	42.8	41.6	39.6	33.9	28.1	20.3
5SV07	1.1	1.5	52.7						50.7	50.1	49.5	48.1	45.8	39.1	32.2	23.1
5SV08	11	1.5	60.1						57.6	57.0	56.2	54.6	51.8	44.1	36.2	25.8
5SV09	1.5	2	68.0						65.5	64.8	64.0	62.2	59.3	50.6	41.9	30.2
5SV10	1.5	2	75.5						72.4	71.7	70.8	68.7	65.4	55.7	46.0	33.0
5SV11	1.5	2	82.8						79.3	78.4	77.5	75.2	71.4	60.7	49.9	35.6
5SV12	2.2	3	90.8						88.0	87.0	86.0	83.4	79.3	67.4	55.7	40.5
5SV13	2.2	3	98.3						95.0	94.0	92.8	90.0	85.5	72.6	59.9	43.5
5SV14	2.2	3	105.7						102.0	100.9	99.6	96.6	91.7	77.8	64.0	46.3
5SV15	2.2	3	113.1						109.0	107.8	106.4	103.1	97.8	82.8	68.1	49.1
5SV16	2.2	3	120.5						115.9	114.6	113.1	109.6	103.9	87.8	72.1	51.8
5SV18	3	4	135.8						131.1	129.7	128.0	124.1	117.8	99.9	82.3	59.5
5SV21	3	4	157.9						152.0	150.3	148.3	143.6	136.1	114.9	94.2	67.6

Performances in compliance with ISO 9906: 2012 - Grade 3B

10, 15, 22SV SERIES
HYDRAULIC PERFORMANCE TABLE AT 50 Hz, 2 POLES

PUMP TYPE	RATED POWER		Q = DELIVERY													
			l/min 0	83.34	100	133	170	183.34	233	270	330	350	400	430	460	483.33
			m3/h 0	5.0	6.0	8.0	10.2	11.0	14.0	16.2	19.8	21.0	24.0	25.8	27.6	29.0
	kW	HP	H = TOTAL HEAD IN METRES OF COLUMN OF WATER													
10SV02	0.75	1	23.6	21.9	21.3	19.6	17.0	15.8	10.0							
10SV03	1.1	1.5	35.7	33.0	32.1	29.6	25.8	24.1	16.0							
10SV04	1.5	2	47.7	44.2	43.0	39.9	34.8	32.6	21.7							
10SV05	2.2	3	60.0	56.1	54.7	50.9	44.9	42.2	29.0							
10SV06	2.2	3	71.8	66.8	65.0	60.4	53.1	49.8	33.9							
10SV07	3	4	83.6	78.3	76.2	70.8	62.1	58.3	39.8							
10SV08	3	4	95.3	88.9	86.5	80.1	70.2	65.7	44.5							
10SV09	4	5.5	106.3	100.1	97.5	90.8	80.0	75.1	52.1							
10SV10	4	5.5	118.0	110.8	107.9	100.3	88.2	82.8	57.2							
10SV11	4	5.5	129.6	121.3	118.1	109.6	96.3	90.3	62.1							
10SV13	5.5	7.5	156.0	146.5	142.7	132.6	116.4	109.2	74.3							
15SV02	2.2	3	28.7			26.7	25.9	25.5	23.9	22.4	18.9	17.4	13.1			
15SV03	3	4	43.3			40.4	39.1	38.6	36.2	33.8	28.7	26.5	20.1			
15SV04	4	5.5	58.4			54.7	53.1	52.5	49.4	46.3	39.7	36.9	28.7			
15SV05	4	5.5	72.7			67.8	65.8	65.0	61.0	57.1	48.7	45.2	34.9			
15SV06	5.5	7.5	87.6			81.5	79.4	78.4	74.1	69.9	60.3	56.3	44.2			
15SV07	5.5	7.5	101.9			94.5	91.9	90.8	85.7	80.6	69.4	64.7	50.5			
15SV08	7.5	10	117.4			110.9	108.0	106.8	100.8	94.9	82.0	76.7	60.6			
15SV09	7.5	10	131.9			124.4	121.0	119.6	112.8	106.1	91.5	85.5	67.4			
15SV10	11	15	147.7			138.8	135.3	133.8	126.7	119.6	103.9	97.4	77.5			
15SV11	11	15	162.3			152.4	148.5	146.8	138.9	131.1	113.8	106.5	84.7			
22SV01	1.1	1.5	14.7					13.5	12.7	12.0	10.4	9.7	7.7	6.3	4.7	3.4
22SV02	2.2	3	30.4					28.4	27.2	26.0	23.3	22.2	18.9	16.6	13.8	11.5
22SV03	3	4	45.4					42.2	40.4	38.5	34.5	32.8	27.8	24.2	20.2	16.6
22SV04	4	5.5	60.9					56.8	54.4	51.9	46.6	44.4	37.9	33.1	27.7	23.0
22SV05	5.5	7.5	76.0					70.9	67.9	64.9	58.3	55.6	47.4	41.4	34.7	28.8
22SV06	7.5	10	93.2					88.8	85.7	82.5	75.4	72.4	63.3	56.7	49.1	42.6
22SV07	7.5	10	108.5					103.1	99.4	95.7	87.2	83.7	73.1	65.3	56.5	48.8
22SV08	11	15	124.6					119.2	115.2	111.0	101.6	97.7	85.7	77.0	66.9	58.2
22SV09	11	15	140.1					133.7	129.2	124.4	113.8	109.3	95.8	86.0	74.6	64.8
22SV10	11	15	155.4					148.2	143.1	137.8	125.9	120.9	105.8	94.8	82.3	71.3

Performances in compliance with ISO 9906: 2012 - Grade 3B

33, 46SV SERIES
HYDRAULIC PERFORMANCE TABLE AT 50 Hz, 2 POLES

PUMP TYPE	RATED POWER		Q = DELIVERY										
			l/min 0	250	300	367	417	500	583	667	750	900	1000
			m^3/h 0	15	18	22	25	30	35	40	45	54	60
	kW	HP	H = TOTAL HEAD METRES COLUMN OF WATER										
33SV1/1A	2.2	3	17.4	16.2	15.7	15	14	12.2	9.8	6.7			
33SV1	3	4	23.8	21.7	21.2	20	20	17.8	15.5	12.7			
33SV2/2A	4	5.5	35.1	34.1	33.3	32	30	27	22.4	16.6			
33SV2/1A	4	5.5	40.8	38.8	37.9	36	35	32	27.5	22.3			
33SV2	5.5	7.5	47.8	45	44.1	43	41	39	35	29.9			
33SV3/2A	5.5	7.5	57.7	55.2	53.8	51	49	44	38	29.6			
33SV3/1A	7.5	10	64.5	61.3	60	58	56	51	45	37			
33SV3	7.5	10	71.5	67.4	66.0	64	62	58	52.0	44.6			
33SV4/2A	7.5	10	82	78.8	77	74	72	66	58	47.2			
33SV4/1A	11	15	88.9	85	83	81	78	73	65	55.1			
33SV4	11	15	95.9	91.1	90	87	85	80	73	63.1			
33SV5/2A	11	15	106	101.6	100	96	93	85	76	63			
33SV5/1A	11	15	112.7	107.2	105	102	99	92	82	70			
33SV5	15	20	120.4	114.9	113	110	107	101	92	80.5			
33SV6/2A	15	20	131.2	126.9	125	120	116	108	96	81.2			
33SV6/1A	15	20	139.1	133.5	131	128	124	116	105	90.4			
33SV6	15	20	145.6	139	137	133	129	121	110	96.1			
33SV7/2A	15	20	156	149.9	147	143	138	128	115	98.2			
33SV7/1A	18.5	25	163.3	156.6	154	150	145	136	123	106.2			
46SV1/1A	3	4	19.5			19.2	18.8	17.9	16.7	15.1	13.1	8.5	4.6
46SV1	4	5.5	27.2			24	23.5	22.5	21.4	19.9	18.2	14.3	10.8
46SV2/2A	5.5	7.5	38.8			39.8	39.2	37.8	35.7	32.9	29.4	21.1	13.9
46SV2	7.5	10	52.6			48.5	47.7	46.1	44.2	41.7	38.7	31.4	25.1
46SV3/2A	11	15	64.7			65.1	64	62	60	56	52	40.4	30.8
46SV3	11	15	80.8			74.3	73	71	68	65	60	50	40.7
46SV4/2A	15	20	92.4			90.7	90	87	83	79	73	58	45.6
46SV4	15	20	107.3			99.8	98	96	92	87	82	68	55.9
46SV5/2A	18.5	25	117.2			114.8	113	110	106	100	93	75	60.2
46SV5	18.5	25	134.5			125.1	123	120	116	110	103	86	71.5
46SV6/2A	22	30	143.7			139.3	138	134	129	122	113	92	73.4
46SV6	22	30	161			149.9	148	144	139	132	124	104	86

Performances in compliance with ISO 9906: 2012 - Grade 3B

66, 92SV SERIES
HYDRAULIC PERFORMANCE TABLE AT 50 Hz, 2 POLES

PUMP TYPE	RATED POWER		Q = DELIVERY												
			l/min 0	500	600	700	750	900	1000	1200	1300	1417	1600	1800	2000
			m^3/h 0	30	36	42	45	54	60	72	78	85	96	108	120
	kW	HP	H = TOTAL HEAD METRES COLUMN OF WATER												
66SV1/1A	4	5.5	23.8	21.4	20.7	19.9	19.4	17.8	16.6	13.3	11.2	8.3			
66SV1	5.5	7.5	29.2	25.8	24.8	23.8	23.3	21.8	20.7	17.9	16.1	13.5			
66SV2/2A	7.5	10	47.5	42.6	41.2	39.5	38.6	36	32.9	26.4	22.2	16.4			
66SV2/1A	11	15	54.2	49.6	48.2	46.7	45.8	42.9	40.6	34.8	31.2	26.2			
66SV2	11	15	60.4	55.7	54.4	52.8	52	49.3	47.1	42	38.9	34.7			
66SV3/2A	15	20	78.4	71.6	70	67	66	62	58	49	43.3	35.3			
66SV3/1A	15	20	84.7	77.8	76	74	72	68	65	56	51	44.0			
66SV3	18.5	25	91.4	84.7	83	81	79	75	72	64	60	53.5			
66SV4/2A	18.5	25	108.9	99.6	97	94	92	86	82	70	63	52.8			
66SV4/1A	22	30	115.2	105.9	103	100	99	93	89	78	71	61.8			
66SV4	22	30	121.6	112.5	110	107	105	100	96	86	79	70.8			
92SV1/1A	5.5	7.5	24.5				22.2	21.5	20.9	19.4	18.5	17.3	15	11.8	7.9
92SV1	7.5	10	33.5				28.7	27.2	26.2	24.3	23.3	22.2	20.2	17.6	14.3
92SV2/2A	11	15	49.4				45.1	43.7	42.5	39.6	37.9	35.5	30.9	24.6	16.8
92SV2	15	20	67.8				58.2	55	53	49.5	47.6	45.2	41.4	36.3	29.6
92SV3/2A	18.5	25	82.4				74.4	72	70	65	62	59	52	43.6	32.9
92SV3	22	30	102.2				88.2	84	81	76	73	69	63	56	46.3
92SV4/2A	30	40	115.7				104	100	97	90	87	82	74	63	49
92SV4	30	40	133.1				117	112	108	101	97	92	85	75	62.5
92SV5/2A	37	50	149				133.2	128	124	116	111	105	95	81	64.6

Performances in compliance with ISO 9906: 2012 - Grade 3B

GHV10/1SV TO 10SV BOOSTER SET DIMENSIONS
R VERSION

GHV10	DNA/DNM	A	B	H	H1	H2	L	Kg
1SV12R007T	DN25	175	519	155	387	981	694	39
1SV13R007T	DN25	175	519	155	407	981	694	39
1SV15R007T	DN25	175	519	155	447	1041	694	40
1SV17R011T	DN25	175	519	155	487	1081	694	43
1SV19R011T	DN25	175	519	155	527	1121	694	44
1SV22R011T	DN25	175	519	155	587	1181	694	45
1SV25R015T	DN25	175	519	155	647	1286	694	51
3SV07R007T	DN25	175	519	155	287	881	694	32
3SV08R007T	DN25	175	519	155	307	901	694	37
3SV09R011T	DN25	175	519	155	327	921	694	40
3SV10R011T	DN25	175	519	155	347	941	694	40
3SV11R011T	DN25	175	519	155	367	961	694	41
3SV12R011T	DN25	175	519	155	387	981	694	41
3SV13R015T	DN25	175	519	155	407	1046	694	46
3SV14R015T	DN25	175	519	155	427	1066	694	53
3SV16R015T	DN25	175	519	155	467	1106	694	53
3SV19R022T	DN25	175	519	155	527	1166	694	57
3SV21R022T	DN25	175	519	155	567	1206	694	58
5SV07R011T	DN32	175	519	155	322	916	694	39
5SV08R011T	DN32	175	519	155	347	941	694	40
5SV09R015T	DN32	175	519	155	372	1011	694	46
5SV10R015T	DN32	175	519	155	397	1036	694	47
5SV11R015T	DN32	175	519	155	422	1061	694	47
5SV12R022T	DN32	175	519	155	447	1086	694	48
5SV13R022T	DN32	175	519	155	472	1111	694	48
5SV14R022T	DN32	175	519	155	497	1136	694	56
5SV15R022T	DN32	175	519	155	522	1161	694	56
5SV16R022T	DN32	175	519	155	547	1186	694	57
5SV18R030T	DN32	175	519	155	597	1246	694	61
5SV21R030T	DN32	175	519	155	672	1281	694	63
10SV05R022T	DN40	190	534	160	339	1009	724	52
10SV06R022T	DN40	190	534	160	371	1043	724	53
10SV07R030T	DN40	190	534	160	403	1085	724	58
10SV08R030T	DN40	190	534	160	435	1117	724	59
10SV09R040T	DN40	190	534	160	467	1170	724	72
10SV10R040T	DN40	190	534	160	499	1202	724	73
10SV11R040T	DN40	190	534	160	531	1234	724	74
10SV13R055T	DN40	190	534	160	595	1421	724	97

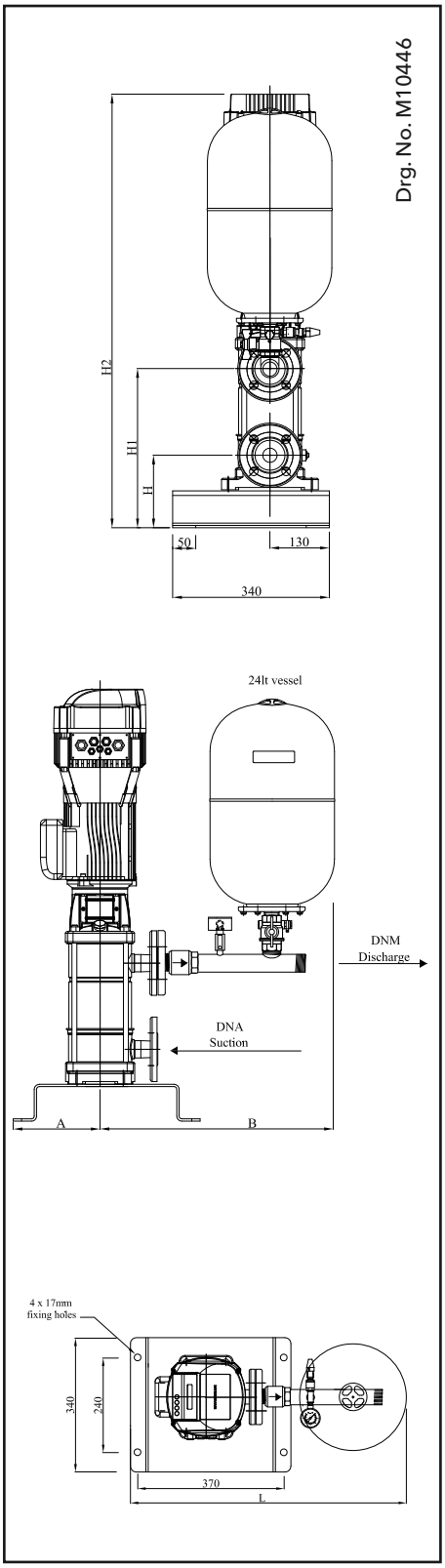

Dimensions in mm. Tolerance ± 10mm.

GHV10/1SV TO 10SV BOOSTER SET DIMENSIONS
F VERSION

GHV10	DNA/DNM	A	B	H	H1	L	Kg
1SV12F007T	DN25	175	519	155	981	694	39
1SV13F007T	DN25	175	519	155	981	694	39
1SV15F007T	DN25	175	519	155	1041	694	40
1SV17F011T	DN25	175	519	155	1081	694	43
1SV19F011T	DN25	175	519	155	1121	694	44
1SV22F011T	DN25	175	519	155	1181	694	45
1SV25F015T	DN25	175	519	155	1286	694	51
3SV07F007T	DN25	175	519	155	881	694	32
3SV08F007T	DN25	175	519	155	901	694	37
3SV09F011T	DN25	175	519	155	921	694	40
3SV10F011T	DN25	175	519	155	941	694	40
3SV11F011T	DN25	175	519	155	961	694	41
3SV12F011T	DN25	175	519	155	981	694	41
3SV13F015T	DN25	175	519	155	1046	694	46
3SV14F015T	DN25	175	519	155	1066	694	53
3SV16F015T	DN25	175	519	155	1106	694	53
3SV19F022T	DN25	175	519	155	1166	694	57
3SV21F022T	DN25	175	519	155	1206	694	58
5SV05F007T	DN32	175	519	155	866	694	37
5SV06F011T	DN32	175	519	155	891	694	39
5SV07F011T	DN32	175	519	155	916	694	39
5SV08F011T	DN32	175	519	155	941	694	40
5SV09F015T	DN32	175	519	155	1011	694	46
5SV10F015T	DN32	175	519	155	1036	694	47
5SV11F015T	DN32	175	519	155	1061	694	47
5SV12F022T	DN32	175	519	155	1086	694	48
5SV13F022T	DN32	175	519	155	1111	694	48
5SV14F022T	DN32	175	519	155	1136	694	56
5SV15F022T	DN32	175	519	155	1161	694	56
5SV16F022T	DN32	175	519	155	1186	694	57
5SV18F030T	DN32	175	519	155	1246	694	61
5SV21F030T	DN32	175	519	155	1281	694	63
10SV01F007T	DN40	190	534	160	870	724	41
10SV02F007T	DN40	190	534	160	870	724	42
10SV03F011T	DN40	190	534	160	902	724	45
10SV04F015T	DN40	190	534	160	979	724	49
10SV05F022T	DN40	190	534	160	1009	724	52
10SV06F022T	DN40	190	534	160	1043	724	53
10SV07F030T	DN40	190	534	160	1085	724	58
10SV08F030T	DN40	190	534	160	1117	724	59
10SV09F040T	DN40	190	534	160	1170	724	72
10SV10F040T	DN40	190	534	160	1202	724	73
10SV11F040T	DN40	190	534	160	1234	724	74
10SV13F055T	DN40	190	534	160	1421	724	97

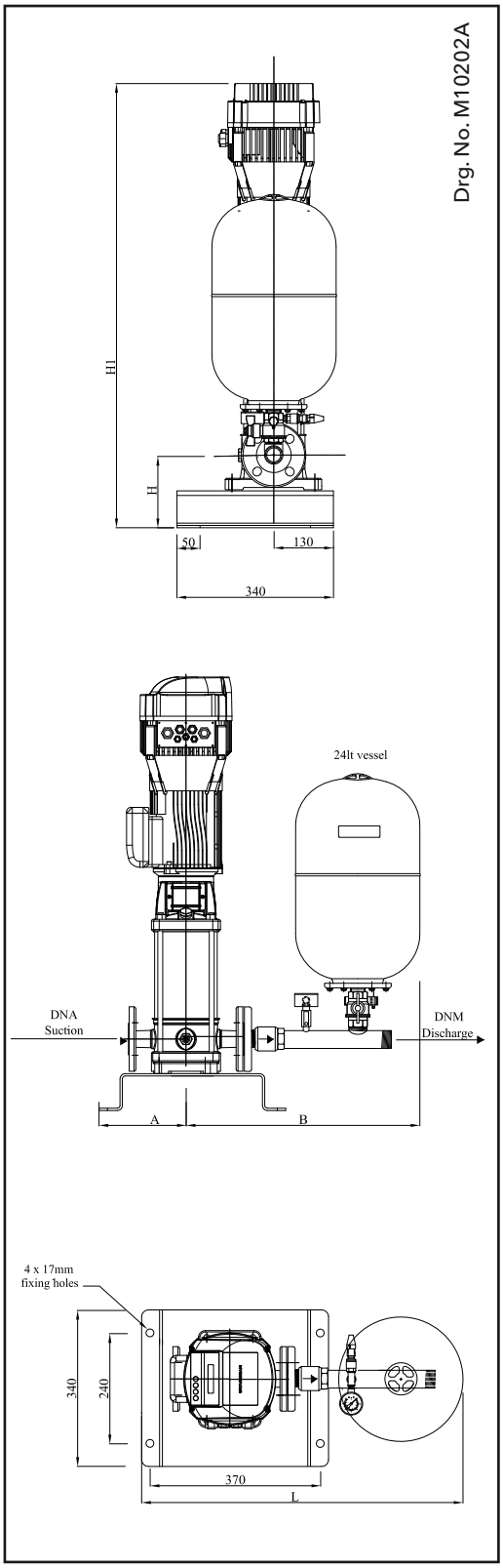

Dimensions in mm. Tolerance ± 10mm.

GHV10/15SV TO 22SV BOOSTER SET DIMENSIONS
F VERSION

GHV10	DNA/DNM	H1	Kg
15SV01F011T	DN50	912	56
15SV02F022T	DN50	957	62
15SV03F030T	DN50	1015	67
15SV04F040T	DN50	1084	74
15SV05F040T	DN50	1132	77
15SV06F055T	DN50	1303	100
15SV07F055T	DN50	1351	101
15SV08F075T	DN50	1391	128
15SV09F075T	DN50	1439	130
15SV10F110T	DN50	1578	148
15SV11F110T	DN50	1626	149
22SV01F011T	DN50	912	46
22SV02F022T	DN50	957	53
22SV03F030T	DN50	1015	58
22SV04F040T	DN50	1084	65
22SV05F055T	DN50	1255	86
22SV06F075T	DN50	1295	105
22SV07F075T	DN50	1343	114
22SV08F110T	DN50	1482	132
22SV09F110T	DN50	1530	133
22SV10F110T	DN50	1578	135

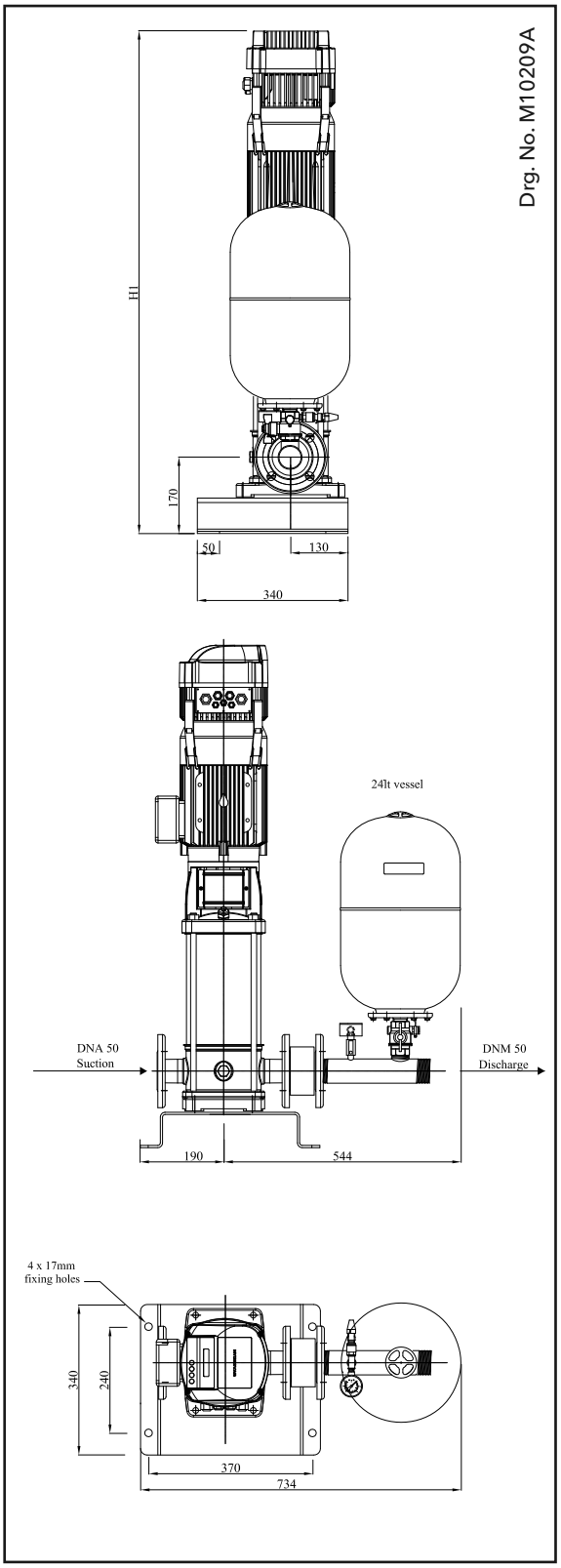

Dimensions in mm. Tolerance ± 10mm.

GHV20/3SV BOOSTER SET DIMENSIONS
R VERSION, WRAS APPROVED

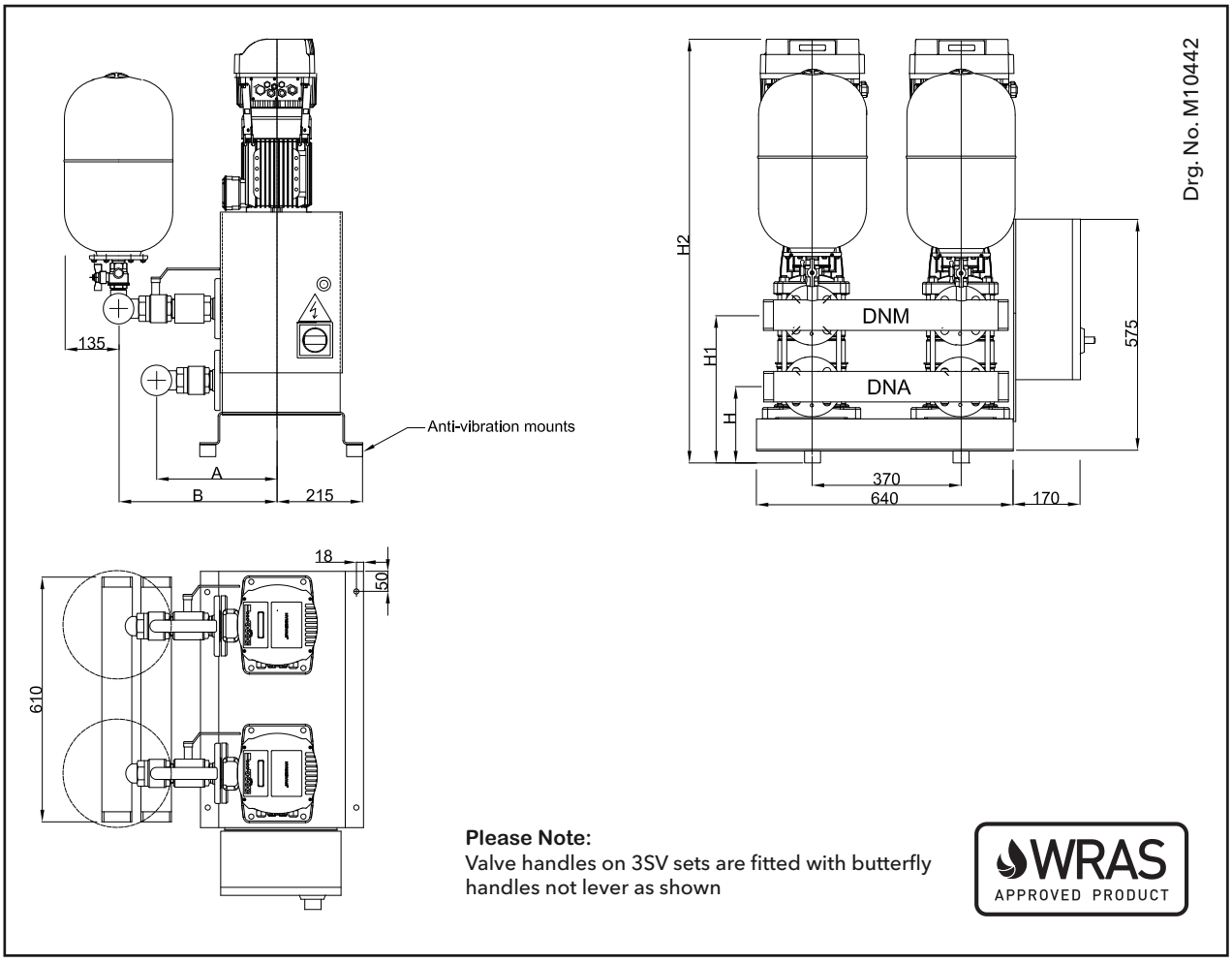

GHV20	DNA	DNM	A	B	H	H1	H2	kg
3SV07R007T	R 2"	R 2"	252	304	185	317	795	134
3SV08R007T	R 2"	R 2"	252	304	185	337	915	144
3SV09R011T	R 2"	R 2"	252	304	185	357	935	149
3SV10R011T	R 2"	R 2"	252	304	185	377	955	150
3SV11R011T	R 2"	R 2"	252	304	185	397	975	150
3SV12R011T	R 2"	R 2"	252	304	185	417	995	151
3SV13R015T	R 2"	R 2"	252	304	185	437	1060	161
3SV14R015T	R 2"	R 2"	252	304	185	457	1080	162
3SV16R015T	R 2"	R 2"	252	304	185	477	1120	164
3SV19R022T	R 2"	R 2"	252	304	185	557	1180	169
3SV21R022T	R 2"	R 2"	252	304	185	577	1220	170

Dimensions in mm. Tolerance ± 10mm.

GHV20/5SV BOOSTER SET DIMENSIONS
R VERSION, WRAS APPROVED

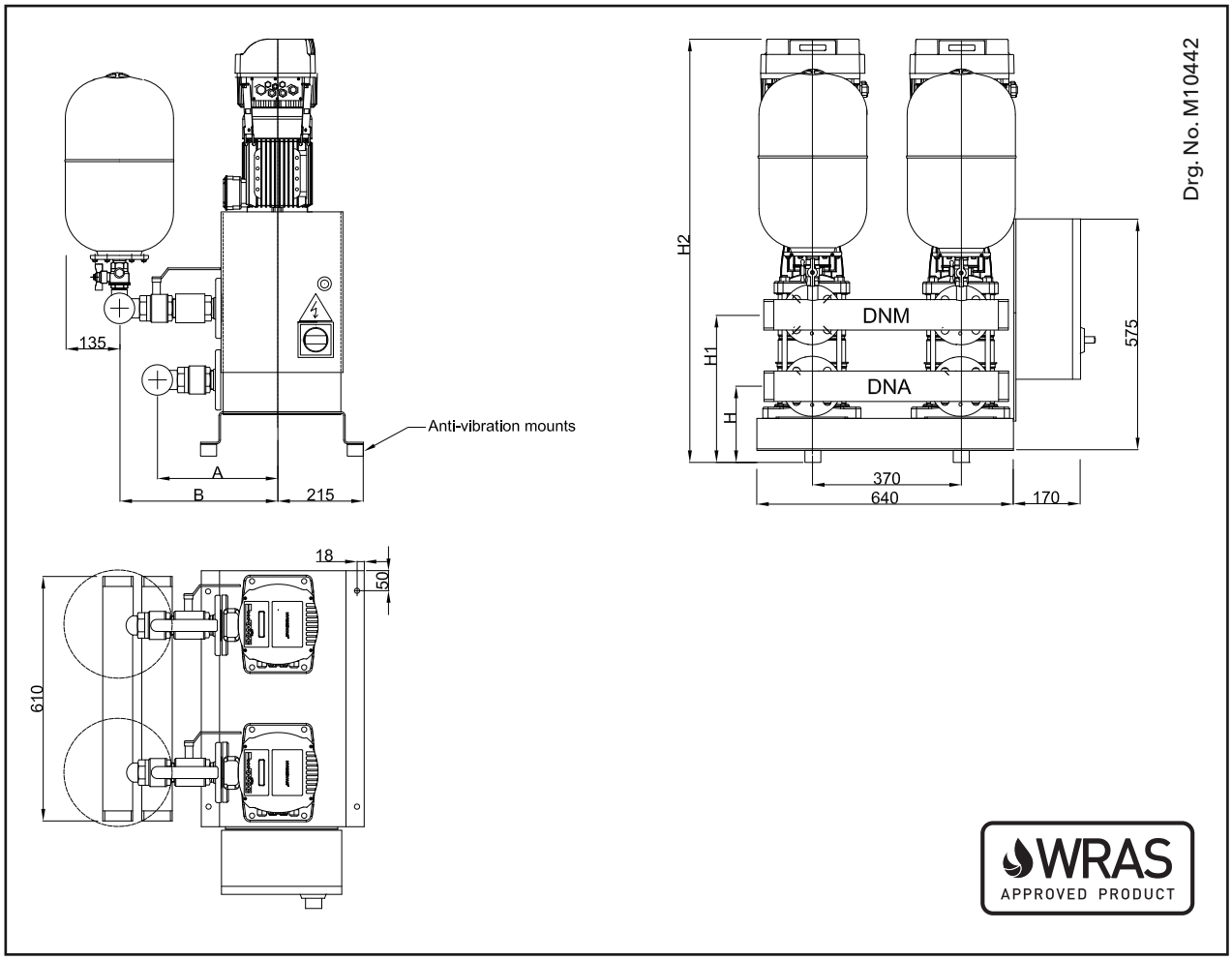

GHV20	DNA	DNM	A	B	H	H1	H2	kg
5SV07R011T	R 2"	R 2"	293	328	185	352	930	158
5SV08R011T	R 2"	R 2"	293	328	185	377	955	159
5SV09R015T	R 2"	R 2"	293	328	185	402	1025	172
5SV10R015T	R 2"	R 2"	293	328	185	427	1050	173
5SV11R015T	R 2"	R 2"	293	328	185	452	1075	174
5SV12R022T	R 2"	R 2"	293	328	185	477	1100	175
5SV13R022T	R 2"	R 2"	293	328	185	502	1125	176
5SV14R022T	R 2"	R 2"	293	328	185	527	1150	177
5SV15R022T	R 2"	R 2"	293	328	185	552	1175	178
5SV16R022T	R 2"	R 2"	293	328	185	577	1200	178
5SV18R030T	R 2"	R 2"	293	328	185	627	1260	188
5SV21R030T	R 2"	R 2"	293	328	185	702	1335	191

Dimensions in mm. Tolerance ± 10mm.

GHV20/10SV BOOSTER SET DIMENSIONS
R VERSION, WRAS APPROVED

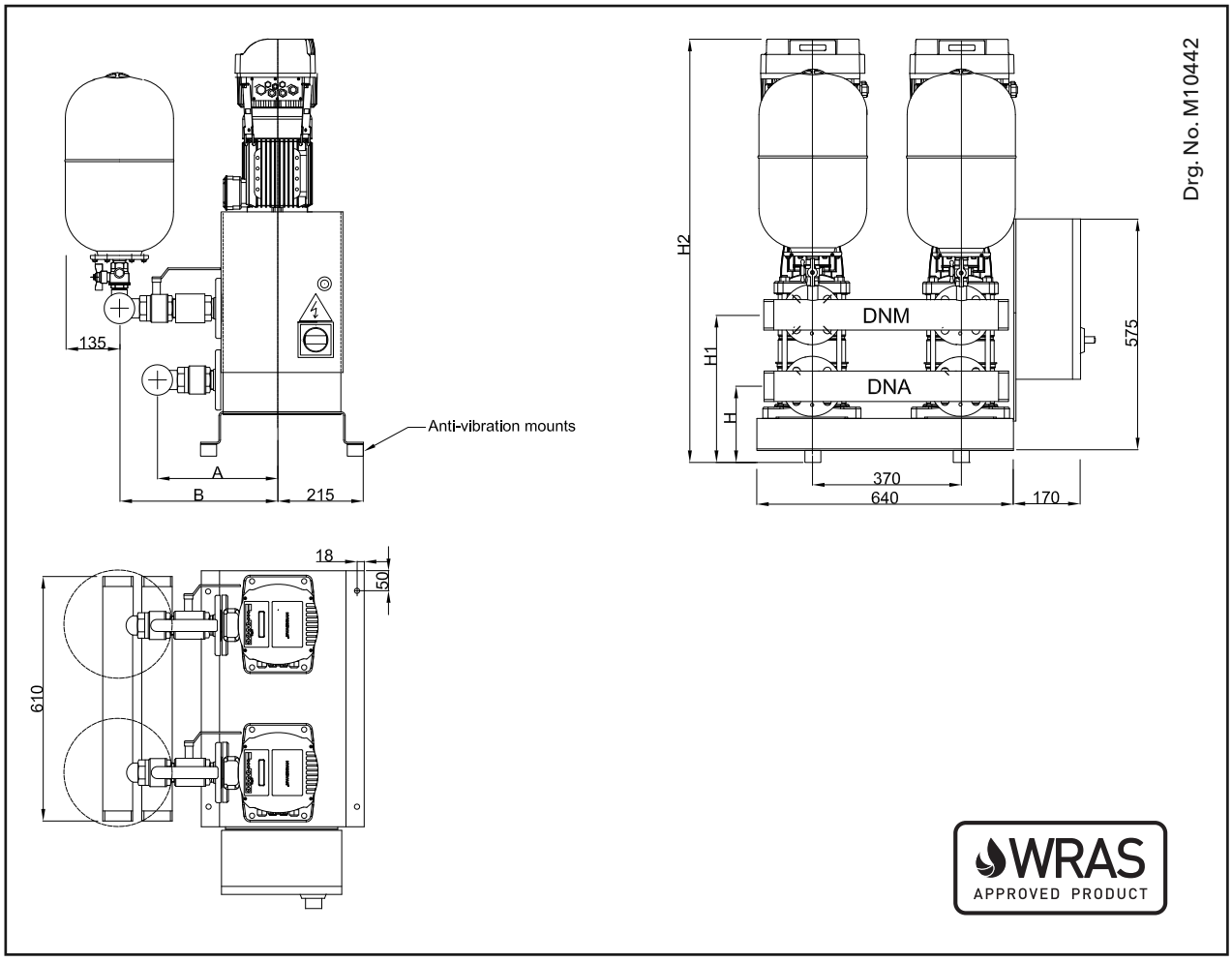

GHV20	DNA	DNM	A	B	H	H1	H2	kg
10SV05R022T	R 2 1/2"	R 2 1/2"	344	408	190	369	1025	209
10SV06R022T	R 2 1/2"	R 2 1/2"	344	408	190	401	1057	214
10SV07R030T	R 2 1/2"	R 2 1/2"	344	408	190	433	1099	218
10SV08R030T	R 2 1/2"	R 2 1/2"	344	408	190	465	1131	223
10SV09R040T	R 2 1/2"	R 2 1/2"	344	408	190	497	1154	223
10SV10R040T	R 2 1/2"	R 2 1/2"	344	408	190	529	1186	227
10SV11R040T	R 2 1/2"	R 2 1/2"	344	408	190	561	1248	230
10SV13R055T	R 2 1/2"	R 2 1/2"	344	408	190	625	1435	232

Dimensions in mm. Tolerance ± 10mm.

GHV20/15SV BOOSTER SET DIMENSIONS
R VERSION, WRAS APPROVED

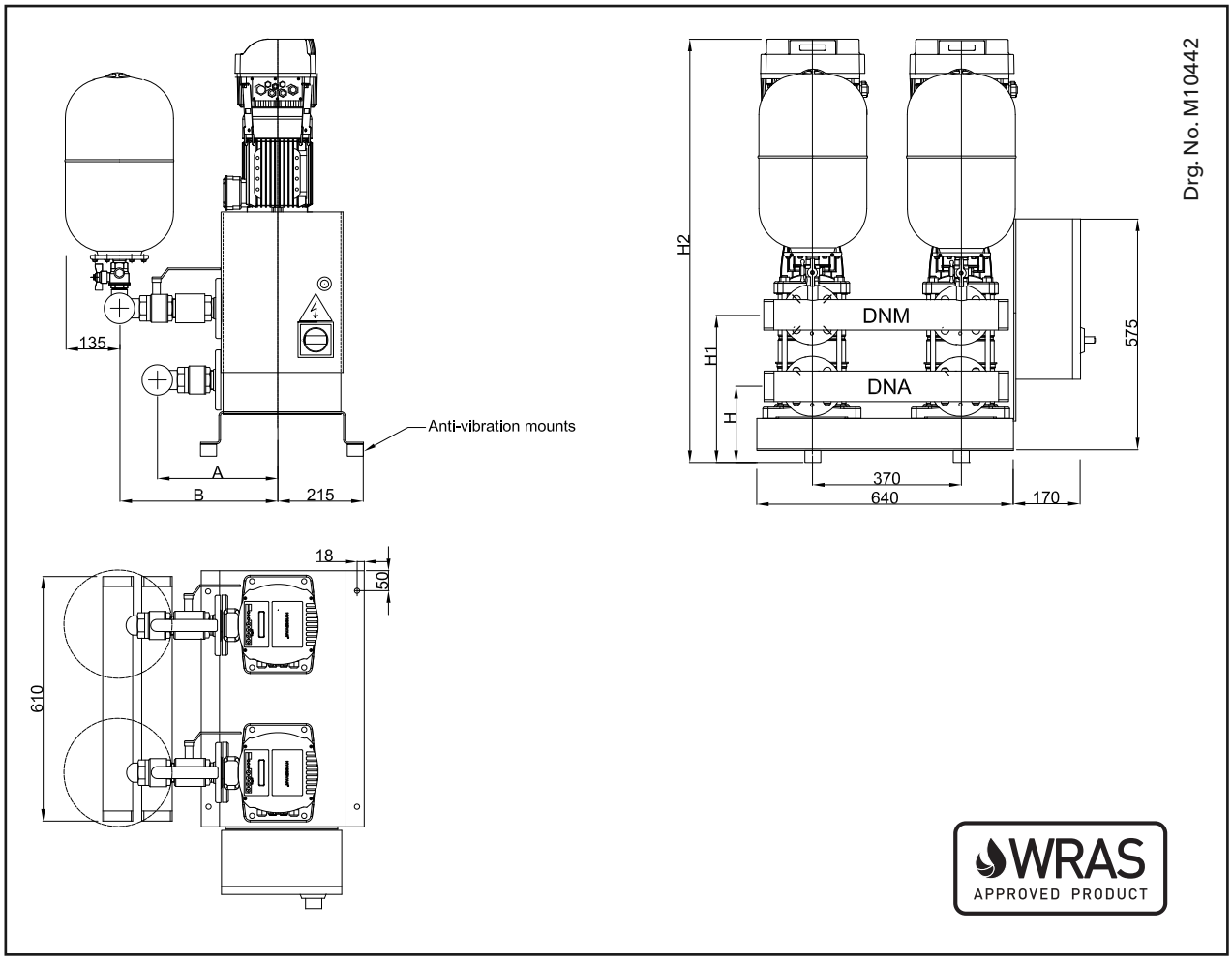

GHV20	DNA	DNM	A	B	H	H1	H2	kg
15SV04R040	R 3"	R 3"	342	389	200	411	1129	237
15SV05R040	R 3"	R 3"	342	389	200	459	1177	244
15SV06R055	R 3"	R 3"	342	389	200	507	1348	252
15SV07R055	R 3"	R 3"	342	389	200	555	1396	260
15SV08R075	R 3"	R 3"	342	389	200	603	1436	267
15SV09R075	R 3"	R 3"	342	389	200	651	1484	275

Dimensions in mm. Tolerance ± 10mm.

GHV20/22SV BOOSTER SET DIMENSIONS
R VERSION, WRAS APPROVED

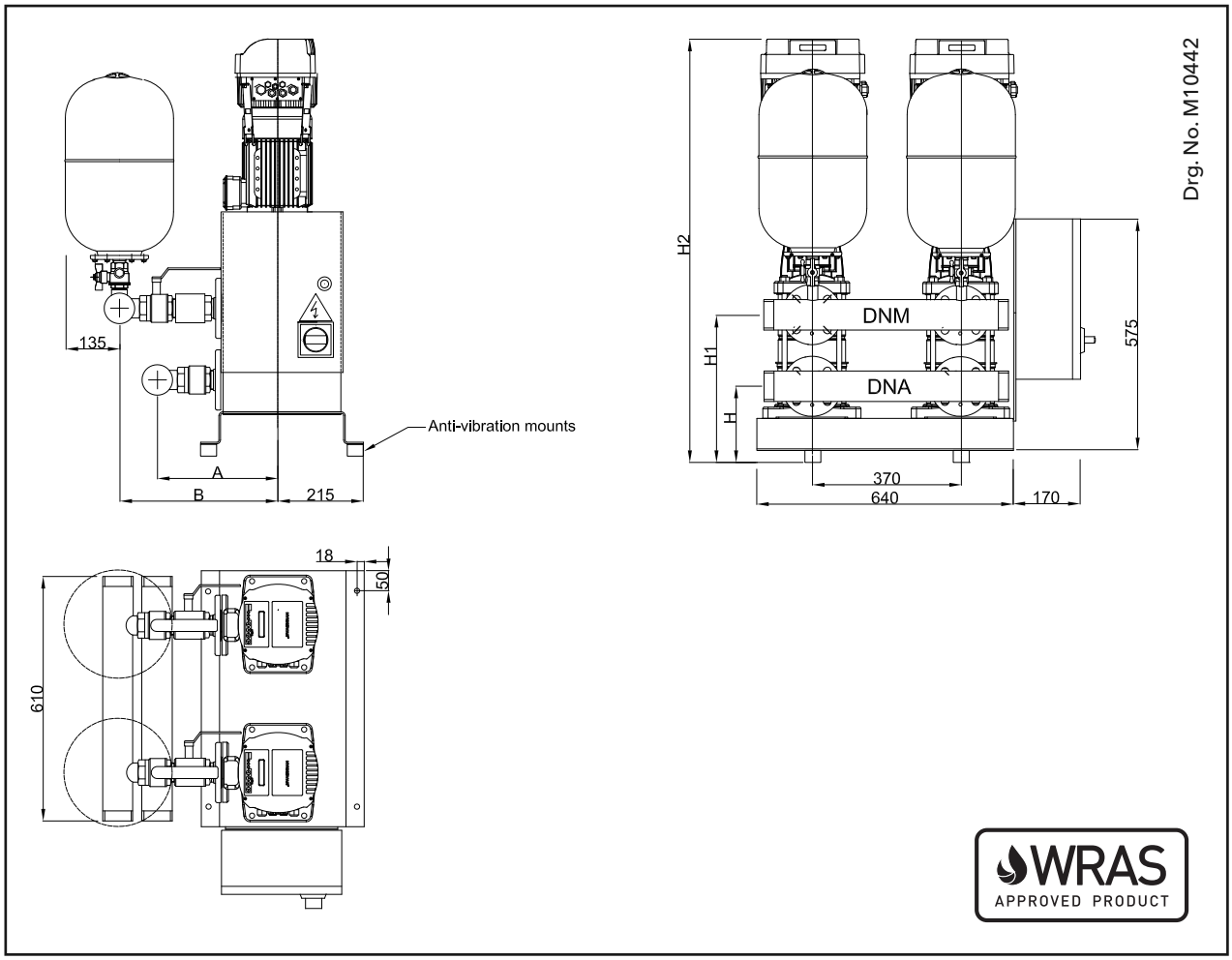

GHV20	DNA	DNM	A	B	H	H1	H2	kg
22SV04R040T	R 3"	R 3"	342	416	200	411	1129	261
22SV05R055T	R 3"	R 3"	342	416	200	459	1300	269
22SV06R075T	R 3"	R 3"	342	416	200	507	1340	278
22SV07R075T	R 3"	R 3"	342	416	200	555	1388	286

Dimensions in mm. Tolerance ± 10mm.

GHV20/3SV BOOSTER SET DIMENSIONS
F VERSION, WRAS APPROVED

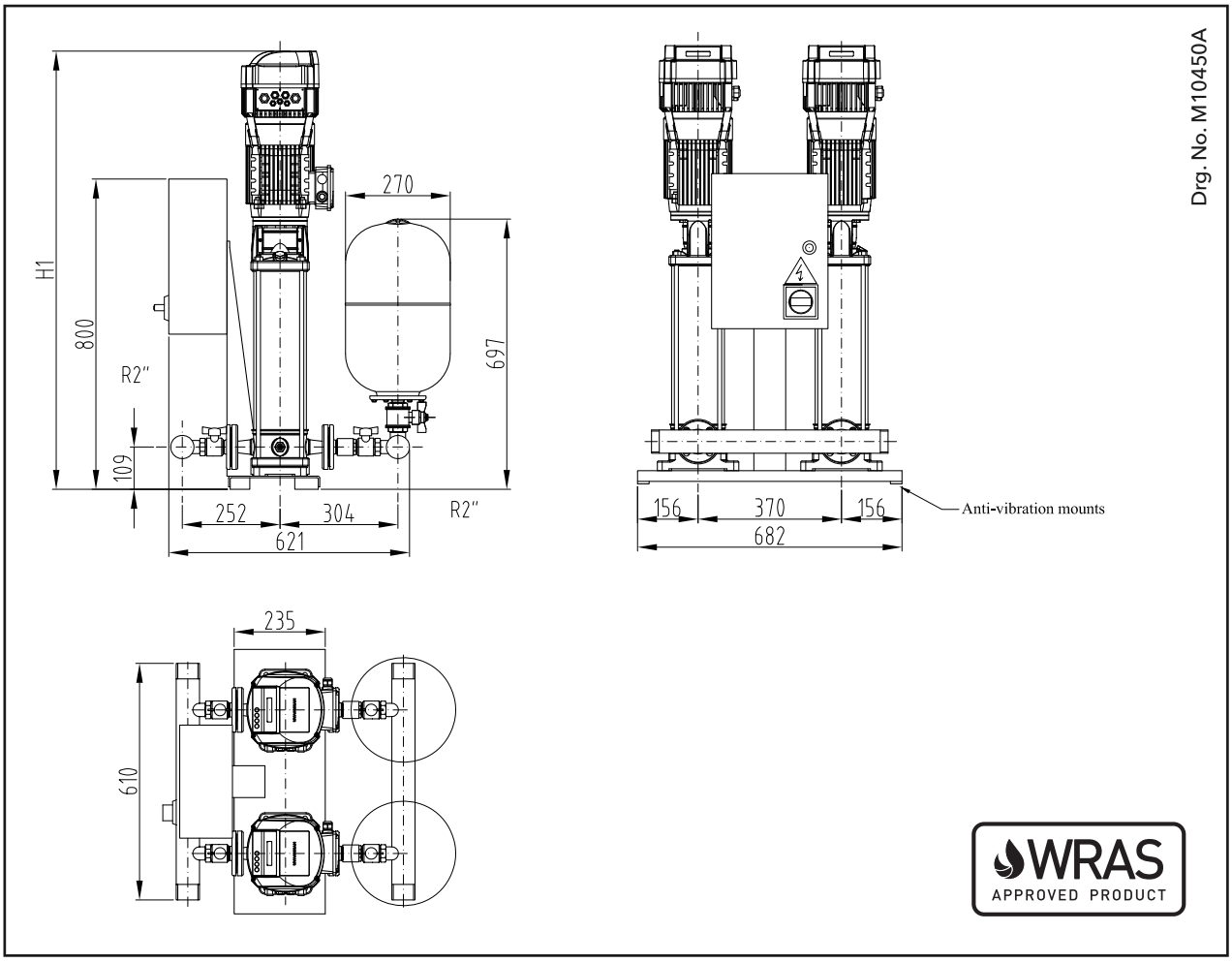

GHV20	DNA	DNM	H1	Kg
3SV05F007T	R2"	R2"	753	128
3SV06F007T	R2"	R2"	773	133
3SV07F007T	R2"	R2"	855	134
3SV08F007T	R2"	R2"	855	144
3SV09F011T	R2"	R2"	875	149
3SV10F011T	R2"	R2"	895	150
3SV11F011T	R2"	R2"	915	150
3SV12F011T	R2"	R2"	935	151
3SV13F015T	R2"	R2"	965	161
3SV14F015T	R2"	R2"	985	162
3SV16F015T	R2"	R2"	1025	164
3SV19F022T	R2"	R2"	1120	169
3SV21F022T	R2"	R2"	1160	170

Dimensions in mm. Tolerance ± 10mm.

GHV20/5SV BOOSTER SET DIMENSIONS
F VERSION, WRAS APPROVED

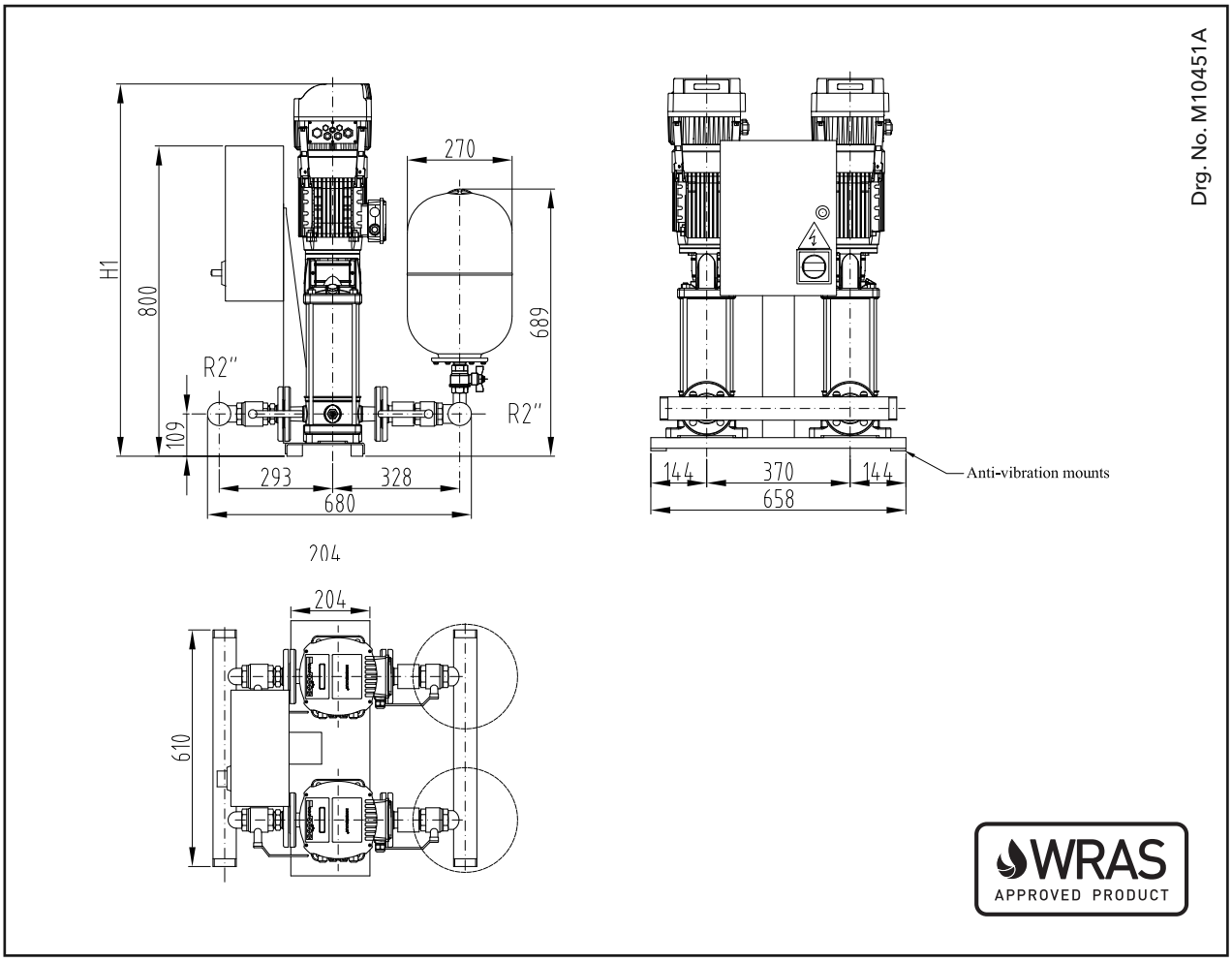

GHV20	DNA	DNM	H1	Kg
5SV03F007T	R2"	R2"	728	141
5SV04F007T	R2"	R2"	753	142
5SV05F007T	R2"	R2"	820	153
5SV06F011T	R2"	R2"	845	157
5SV07F011T	R2"	R2"	870	158
5SV08F011T	R2"	R2"	895	159
5SV09F015T	R2"	R2"	930	172
5SV10F015T	R2"	R2"	955	173
5SV11F015T	R2"	R2"	980	174
5SV12F022T	R2"	R2"	1040	175
5SV13F022T	R2"	R2"	1065	176
5SV14F022T	R2"	R2"	1090	177
5SV16F022T	R2"	R2"	1140	178
5SV18F030T	R2"	R2"	1200	188
5SV21F030T	R2"	R2"	1275	191

Dimensions in mm. Tolerance ± 10mm.

GHV20/10SV BOOSTER SET DIMENSIONS
F VERSION, WRAS APPROVED

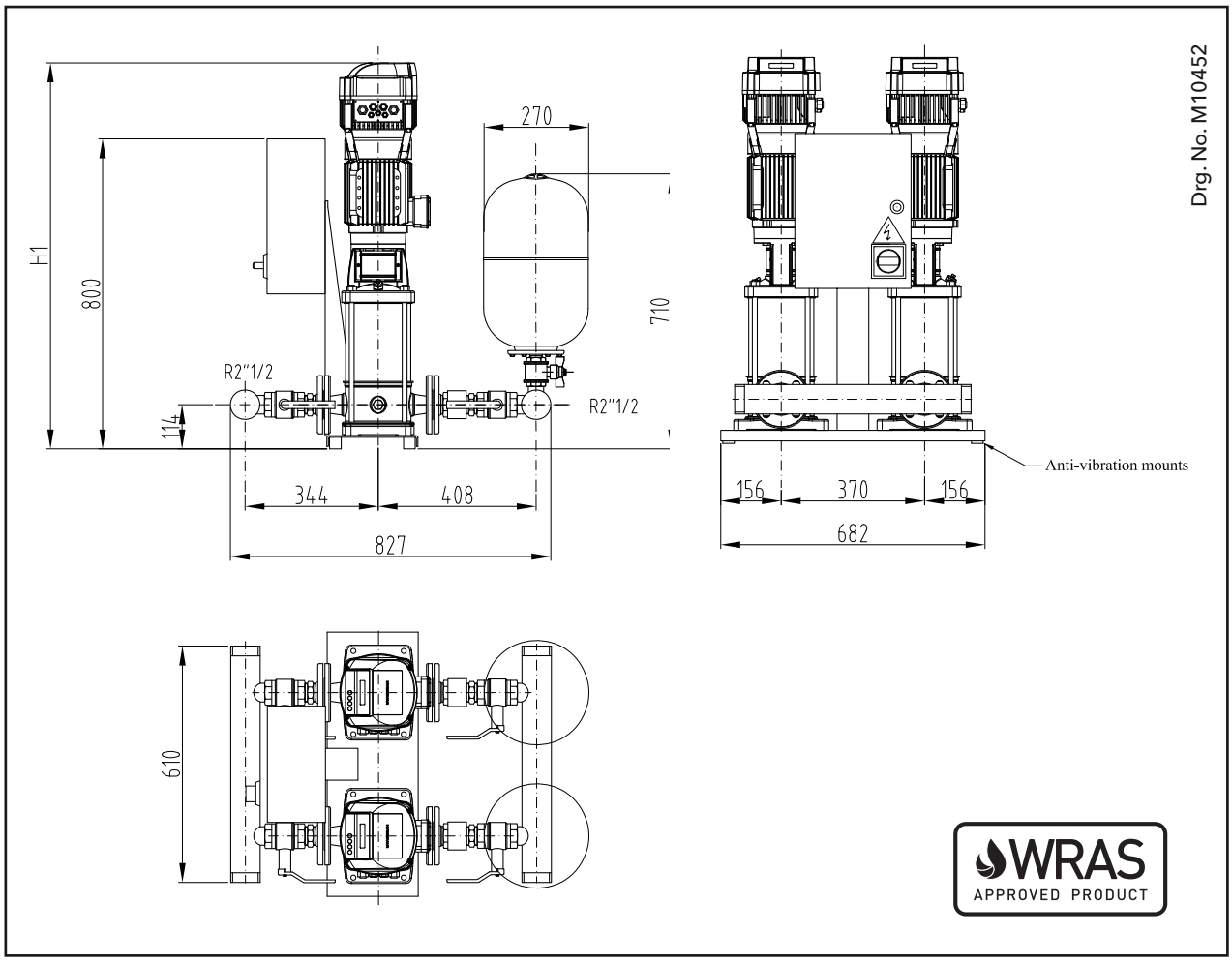

GHV20	DNA	DNM	H1	Kg
10SV02F007T	R2 1/2"	R2 1/2"	823	186
10SV03F011T	R2 1/2"	R2 1/2"	855	190
10SV04F015T	R2 1/2"	R2 1/2"	932	195
10SV05F022T	R2 1/2"	R2 1/2"	964	199
10SV06F022T	R2 1/2"	R2 1/2"	996	204
10SV07F030T	R2 1/2"	R2 1/2"	998	208
10SV08F030T	R2 1/2"	R2 1/2"	1030	210
10SV09F040T	R2 1/2"	R2 1/2"	1083	213
10SV10F040T	R2 1/2"	R2 1/2"	1115	217
10SV11F055T	R2 1/2"	R2 1/2"	1147	222

Dimensions in mm. Tolerance ± 10mm.

GHV20/15SV BOOSTER SET DIMENSIONS
F VERSION, WRAS APPROVED

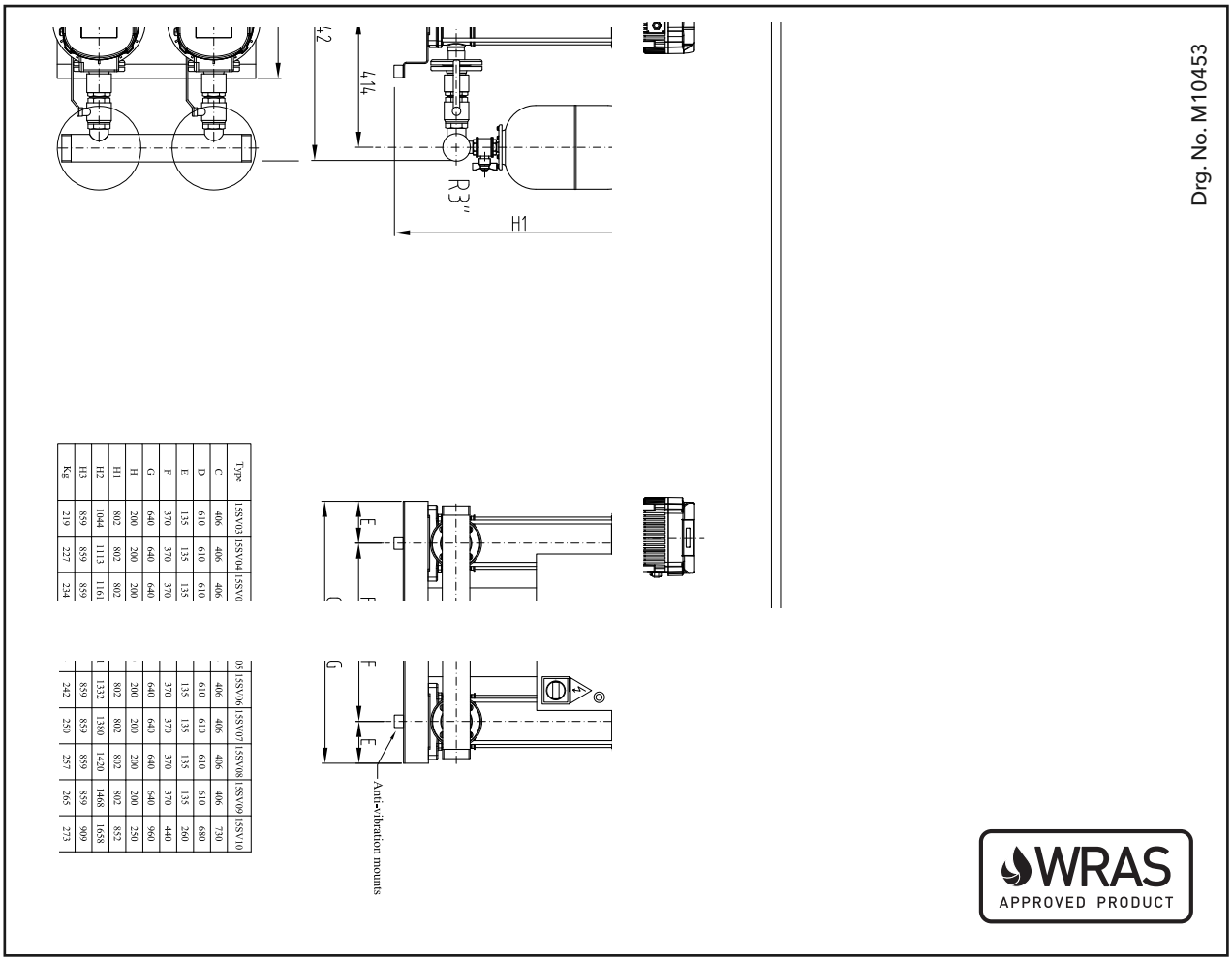

Type	15SV03	15SV04	15SV05
C	406	406	406
D	610	610	610
E	135	135	135
F	370	370	370
G	640	640	640
H	200	200	200
H1	802	802	802
H2	1044	1113	1161
H3	859	859	859
Kg	219	227	234

15SV06	406	610	135	370	640	200	802	1332	859	242
15SV07	406	610	135	370	640	200	802	1380	859	250
15SV08	406	610	135	370	640	200	802	1420	859	257
15SV09	406	610	135	370	640	200	802	1468	859	265
15SV10	730	680	260	440	960	250	852	1658	909	273

GHV20	DNA	DNM	C	D	E	F	G	H	H1	H2	H3	Kg
15SV03F030T	R3"	R3"	406	610	135	370	640	200	802	1044	859	219
15SV04F040T	R3"	R3"	406	610	135	370	640	200	802	1113	859	227
15SV05F040T	R3"	R3"	406	610	135	370	640	200	802	1161	859	234
15SV06F055T	R3"	R3"	406	610	135	370	640	200	802	1332	859	242
15SV07F055T	R3"	R3"	406	610	135	370	640	200	802	1380	859	250
15SV08F075T	R3"	R3"	406	610	135	370	640	200	802	1420	859	257
15SV09F075T	R3"	R3"	406	610	135	370	640	200	802	1468	859	265
15SV10F110T	R3"	R3"	730	680	260	440	960	250	852	1658	909	273

Dimensions in mm. Tolerance ± 10mm.

GHV20/22SV BOOSTER SET DIMENSIONS
F VERSION, WRAS APPROVED

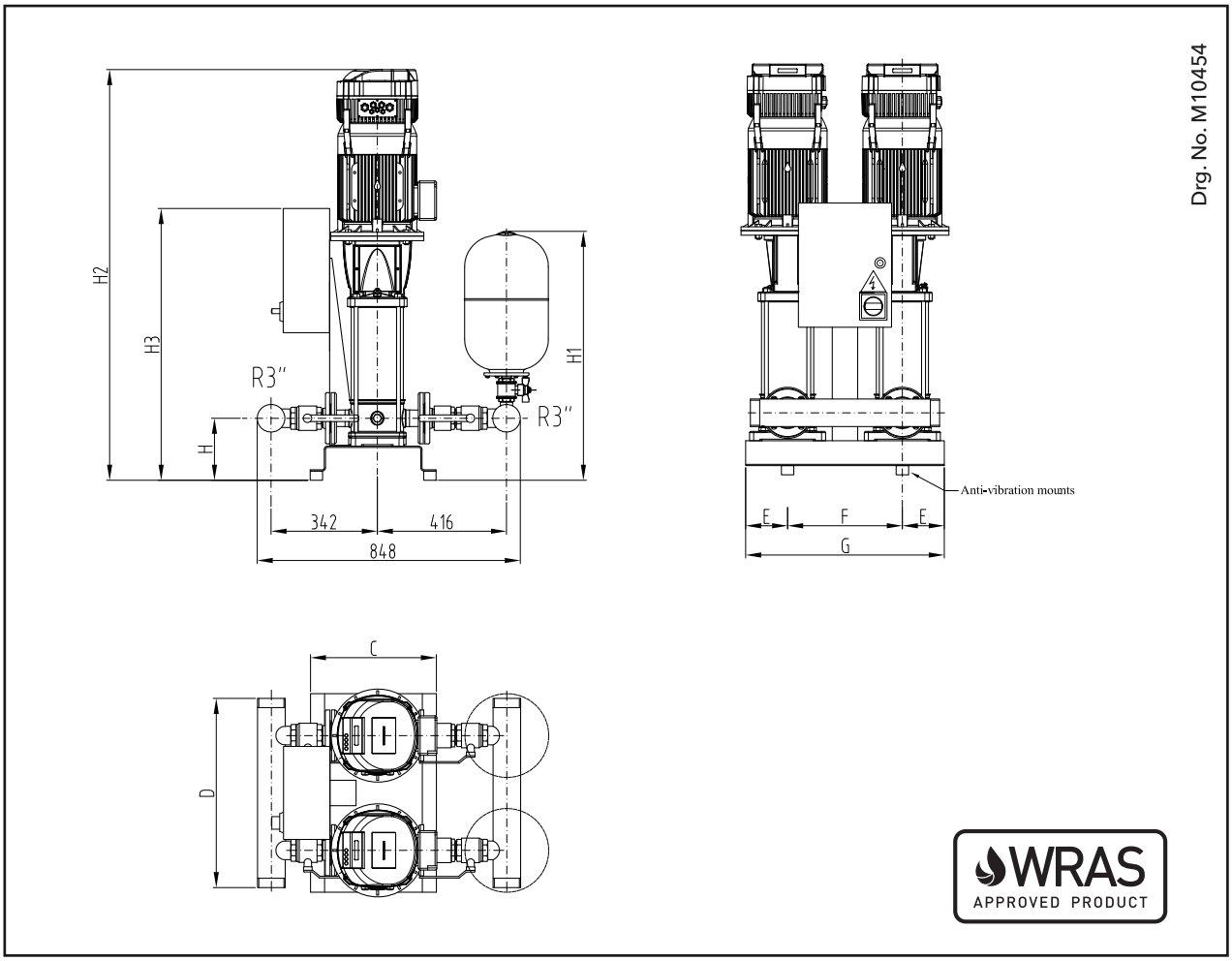

GHV20	DNA	DNM	C	D	E	F	G	H	H1	H2	H3	Kg
22SV02F022T	R3"	R3"	406	610	135	370	640	200	802	1037	859	219
22SV03F030T	R3"	R3"	406	610	135	370	640	200	802	1095	859	227
22SV04F040T	R3"	R3"	406	610	135	370	640	200	802	1164	859	234
22SV05F055T	R3"	R3"	406	610	135	370	640	200	802	1335	859	242
22SV06F075T	R3"	R3"	406	610	135	370	640	200	802	1375	859	250
22SV07F075T	R3"	R3"	406	610	135	370	640	200	802	1423	859	257
22SV08F110T	R3"	R3"	730	680	260	440	960	250	852	1562	926	265
22SV09F110T	R3"	R3"	730	680	260	440	960	250	852	1610	926	268
22SV10F110T	R3"	R3"	730	680	260	440	960	250	852	1658	926	273

Dimensions in mm. Tolerance ± 10mm.

GHV20/33SV - 92SV BOOSTER SET DIMENSIONS
F VERSION, WRAS COMPLIANT

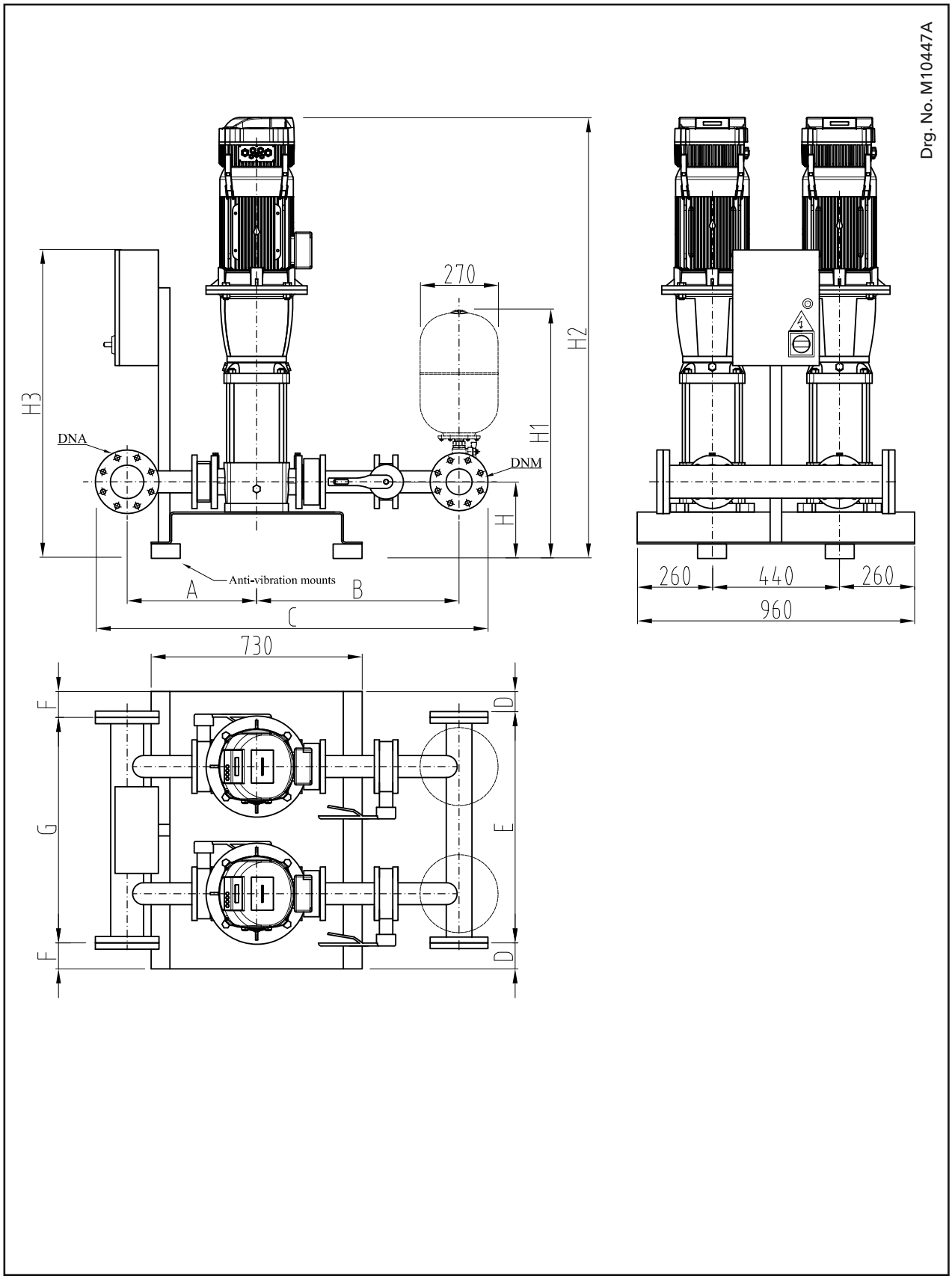

LOWARA
a xylem brand

GHV20/33SV - 92SV BOOSTER SET DIMENSIONS
F VERSION, WRAS COMPLIANT

GHV 20	DNA	DNM	A	B	C	D	E	F	G	H	H1	H2	H3	kg
33SV1/1AG022T	100	80	448	701	1359	90	780	90	780	265	860	1082	916	380
33SV1G030T	100	80	448	701	1359	90	780	90	780	265	860	1117	916	380
33SV2/2AG040T	100	80	448	701	1359	90	780	90	780	265	860	1213	916	380
33SV2/1AG040T	100	80	448	701	1359	90	780	90	780	265	860	1213	916	380
33SV2G055T	100	80	448	701	1359	90	780	90	780	265	860	1289	1067	450
33SV3/2AG055T	100	80	448	701	1359	90	780	90	780	265	860	1364	1067	450
33SV3/1AG075T	100	80	448	701	1359	90	780	90	780	265	860	1356	1067	450
33SV3G075T	100	80	448	701	1359	90	780	90	780	265	860	1356	1067	450
33SV4/2AG075T	100	80	448	701	1359	90	780	90	780	265	860	1431	1067	450
33SV4/1AG110T	100	80	448	701	1359	90	780	90	780	265	860	1527	1067	510
33SV4G110T	100	80	448	701	1359	90	780	90	780	265	860	1527	1067	510
33SV5/2AG110T	100	80	448	701	1359	90	780	90	780	265	860	1602	1067	510
33SV5/1AG110T	100	80	448	701	1359	90	780	90	780	265	860	1602	1067	510
33SV5G150T	100	80	448	701	1359	90	780	90	780	265	860	1706	1067	660
33SV6/2AG150T	100	80	448	701	1359	90	780	90	780	265	860	1781	1067	660
33SV6/1AG150T	100	80	448	701	1359	90	780	90	780	265	860	1781	1067	660
33SV6G150T	100	80	448	701	1359	90	780	90	780	265	860	1781	1067	660
33SV7/2AG150T	100	80	448	701	1359	90	780	90	780	265	860	1856	1067	660
46SV1/1AG030T	125	100	484	739	1457	90	780	90	780	300	907	1157	916	450
46SV1G040T	125	100	484	739	1457	90	780	90	780	300	907	1178	916	450
46SV2/2AG055T	125	100	484	739	1457	90	780	90	780	300	907	1329	1067	450
46SV2G075T	125	100	484	739	1457	90	780	90	780	300	907	1321	1067	450
46SV3/2AG110T	125	100	484	739	1457	90	780	90	780	300	907	1492	1067	650
46SV3G110T	125	100	484	739	1457	90	780	90	780	300	907	1492	1067	650
46SV4/2AG150T	125	100	484	739	1457	90	780	90	780	300	907	1671	1067	650
46SV4G150T	125	100	484	739	1457	90	780	90	780	300	907	1671	1067	650
46SV5/2AG185T	125	100	484	739	1457	90	780	90	780	300	907	1746	1147	750
46SV5G185T	125	100	484	739	1457	90	780	90	780	300	907	1746	1147	750
46SV6/2AG220T	125	100	484	739	1457	90	780	90	780	300	907	1821	1147	795
46SV6G220T	125	100	484	739	1457	90	780	90	780	300	907	1821	1147	795
66SV1/1AG040T	150	125	504	780	1551	90	780	90	820	300	920	1203	916	520
66SV1G055T	150	125	504	780	1551	90	780	90	820	300	920	1279	1067	520
66SV2/2AG075T	150	125	504	780	1551	90	780	90	820	300	920	1361	1067	520
66SV2/1AG110T	150	125	504	780	1551	90	780	90	820	300	920	1457	1067	650
66SV2G110T	150	125	504	780	1551	90	780	90	820	300	920	1457	1067	650
66SV3/2AG150T	150	125	504	780	1551	90	780	90	820	300	920	1651	1067	650
66SV3/1AG150T	150	125	504	780	1551	90	780	90	820	300	920	1651	1067	650
66SV3G185T	150	125	504	780	1551	90	780	90	820	300	920	1651	1147	750
66SV4/2AG185T	150	125	504	780	1551	90	780	90	820	300	920	1741	1147	750
66SV4/1AG220T	150	125	504	780	1551	90	780	90	820	300	920	1741	1147	795
66SV4G220T	150	125	504	780	1551	90	780	90	820	300	920	1741	1147	795
92SV1/1AG055T	200	150	529	794	1635	70	820	70	820	300	934	1279	1067	550
92SV1G075T	200	150	529	794	1635	70	820	70	820	300	934	1271	1067	550
92SV2/2AG110T	200	150	529	794	1635	70	820	70	820	300	934	1457	1067	650
92SV2G150T	200	150	529	794	1635	70	820	70	820	300	934	1561	1067	650
92SV3/2AG185T	200	150	529	794	1635	70	820	70	820	300	934	1651	1147	750
92SV3G220T	200	150	529	794	1635	70	820	70	820	300	934	1651	1147	795

Dimensions in mm. Tolerance ± 10mm.

GHV20/125SV BOOSTER SETS DIMENSIONS
F VERSION

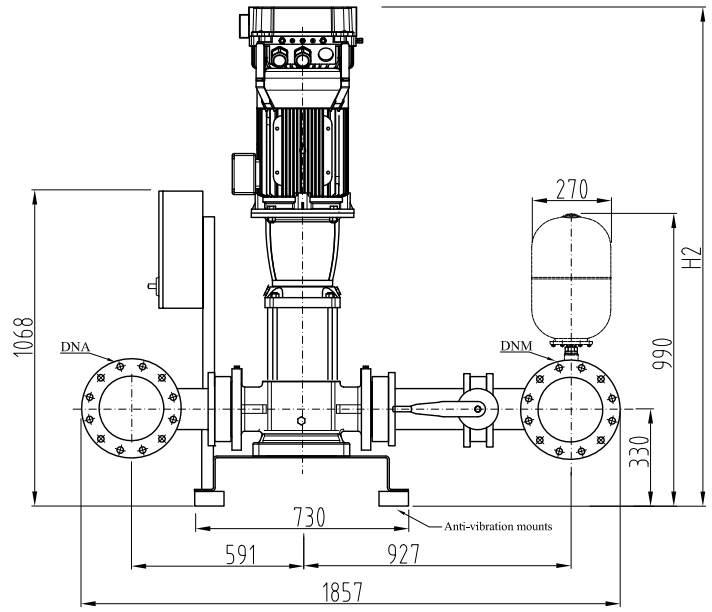

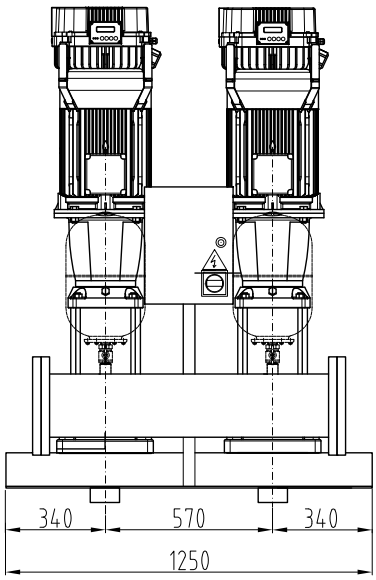

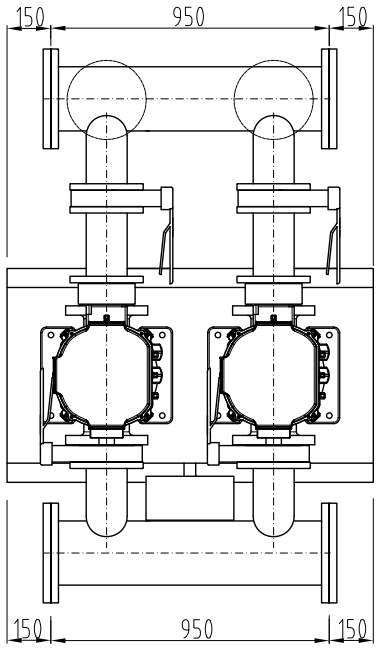

Drg. No. M10448

GHV20	DNA	DNM	H2	kg
125SV1G075T	200	200	1400	870
125SV1G150T	200	200	1750	1000
125SV1G220T	200	200	1900	1100

Dimensions in mm. Tolerance ± 10mm.

GHV30/3SV BOOSTER SETS DIMENSIONS
R VERSION, WRAS APPROVED

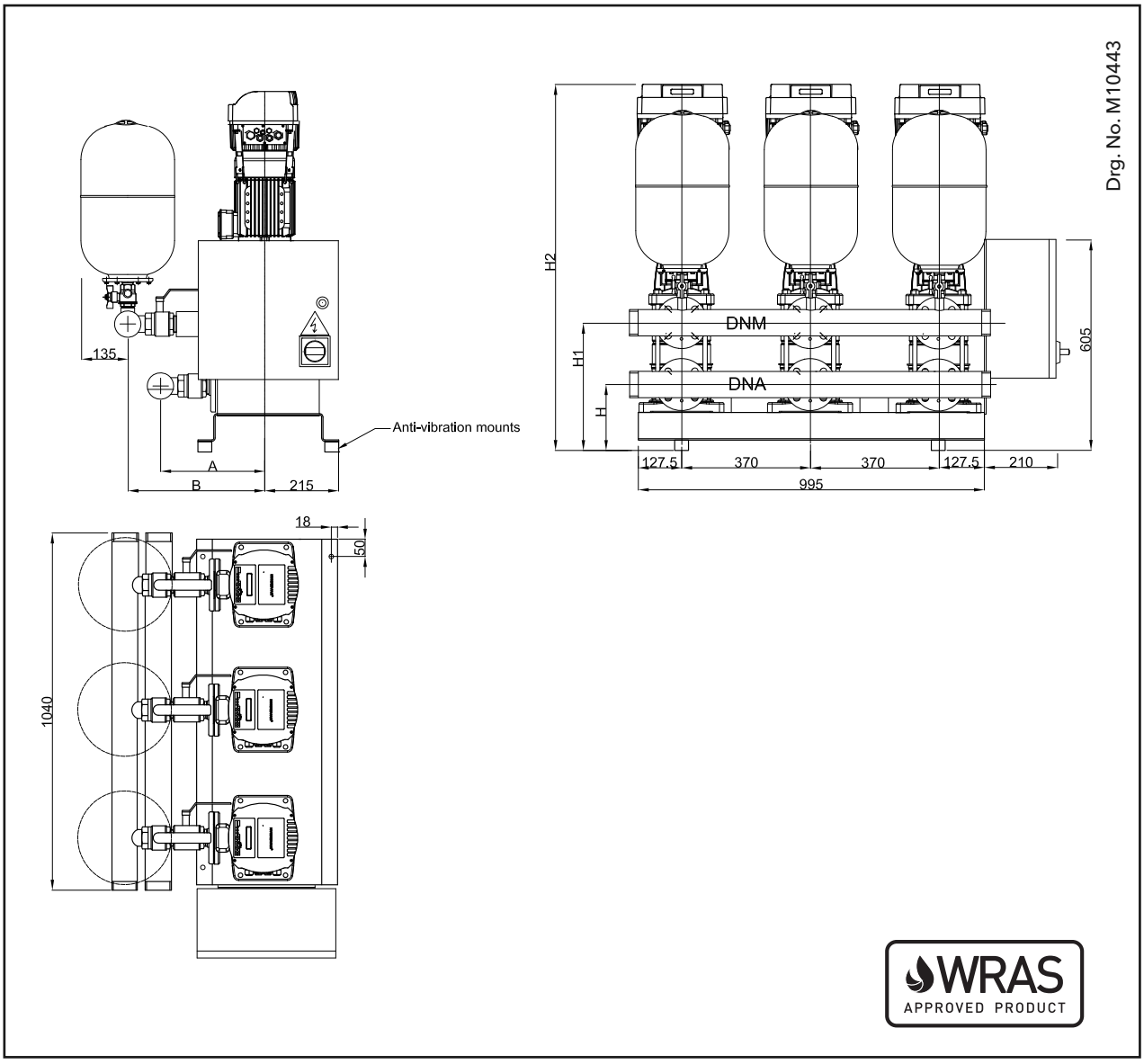

GHV30	DNA	DNM	A	B	H	H1	H2	kg
3SV07R007T	R 2"	R 2"	252	304	185	317	795	201
3SV08R007T	R 2"	R 2"	252	304	185	337	915	216
3SV09R011T	R 2"	R 2"	252	304	185	357	935	224
3SV10R011T	R 2"	R 2"	252	304	185	377	955	225
3SV11R011T	R 2"	R 2"	252	304	185	397	975	225
3SV12R011T	R 2"	R 2"	252	304	185	417	995	227
3SV13R015T	R 2"	R 2"	252	304	185	437	1060	242
3SV14R015T	R 2"	R 2"	252	304	185	457	1080	243
3SV16R015T	R 2"	R 2"	252	304	185	477	1120	246
3SV19R022T	R 2"	R 2"	252	304	185	557	1180	254
3SV21R022T	R 2"	R 2"	252	304	185	577	1220	255

Dimensions in mm. Tolerance ± 10mm.

GHV30/5SV BOOSTER SETS DIMENSIONS
R VERSION, WRAS APPROVED

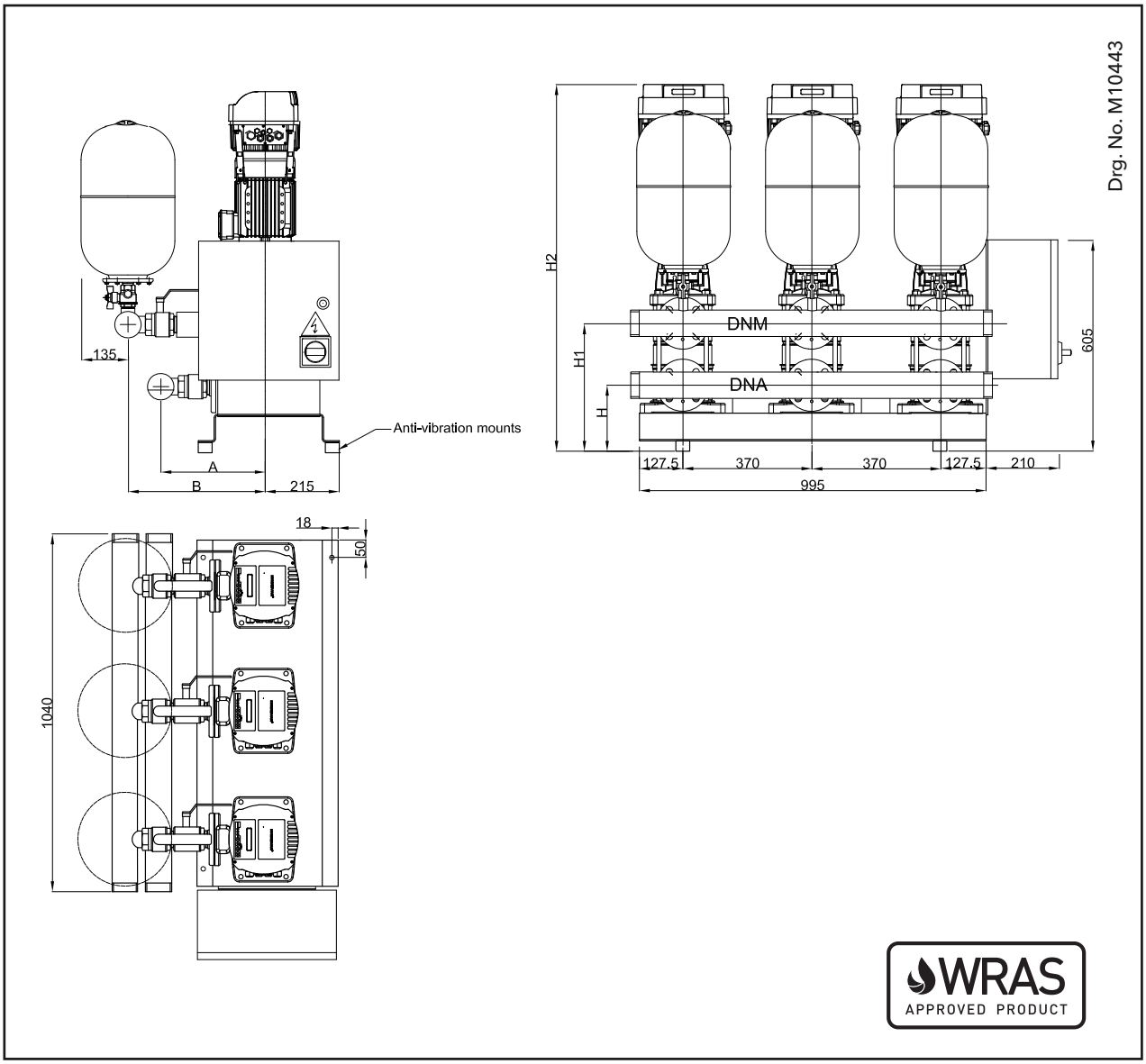

GHV30	DNA	DNM	A	B	H	H1	H2	kg
5SV07R011T	R 2"	R 2"	293	328	185	352	930	237
5SV08R011T	R 2"	R 2"	293	328	185	377	955	239
5SV09R015T	R 2"	R 2"	293	328	185	402	1025	258
5SV10R015T	R 2"	R 2"	293	328	185	427	1050	260
5SV11R015T	R 2"	R 2"	293	328	185	452	1075	261
5SV12R022T	R 2"	R 2"	293	328	185	477	1100	263
5SV13R022T	R 2"	R 2"	293	328	185	502	1125	264
5SV14R022T	R 2"	R 2"	293	328	185	527	1150	266
5SV15R022T	R 2"	R 2"	293	328	185	552	1175	267
5SV16R022T	R 2"	R 2"	293	328	185	577	1200	267
5SV18R030T	R 2"	R 2"	293	328	185	627	1260	282
5SV21R030T	R 2"	R 2"	293	328	185	702	1335	287

Dimensions in mm. Tolerance ± 10mm.

GHV30/10SV BOOSTER SETS DIMENSIONS
R VERSION, WRAS APPROVED

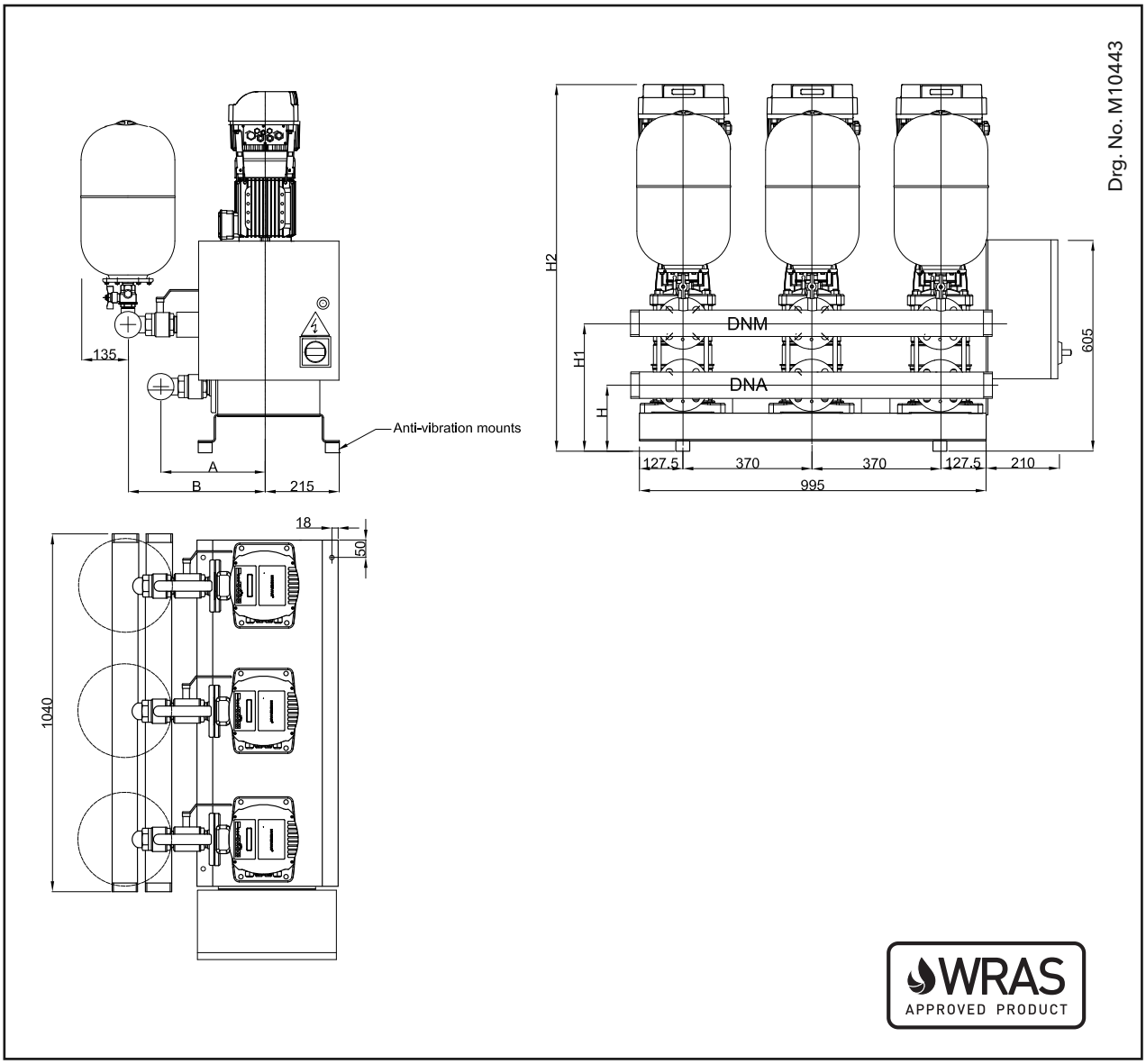

GHV30	DNA	DNM	A	B	H	H1	H2	kg
10SV05R022T	R 2 1/2"	R 2 1/2"	344	408	190	369	1025	324
10SV06R022T	R 2 1/2"	R 2 1/2"	344	408	190	401	1057	331
10SV07R030T	R 2 1/2"	R 2 1/2"	344	408	190	433	1099	338
10SV08R030T	R 2 1/2"	R 2 1/2"	344	408	190	465	1131	345
10SV09R040T	R 2 1/2"	R 2 1/2"	344	408	190	497	1154	345
10SV10R040T	R 2 1/2"	R 2 1/2"	344	408	190	529	1186	352
10SV11R040T	R 2 1/2"	R 2 1/2"	344	408	190	561	1248	360
10SV13R055T	R 2 1/2"	R 2 1/2"	344	408	190	625	1435	360

Dimensions in mm. Tolerance ± 10mm.

GHV30/15SV BOOSTER SETS DIMENSIONS
R VERSION, WRAS APPROVED

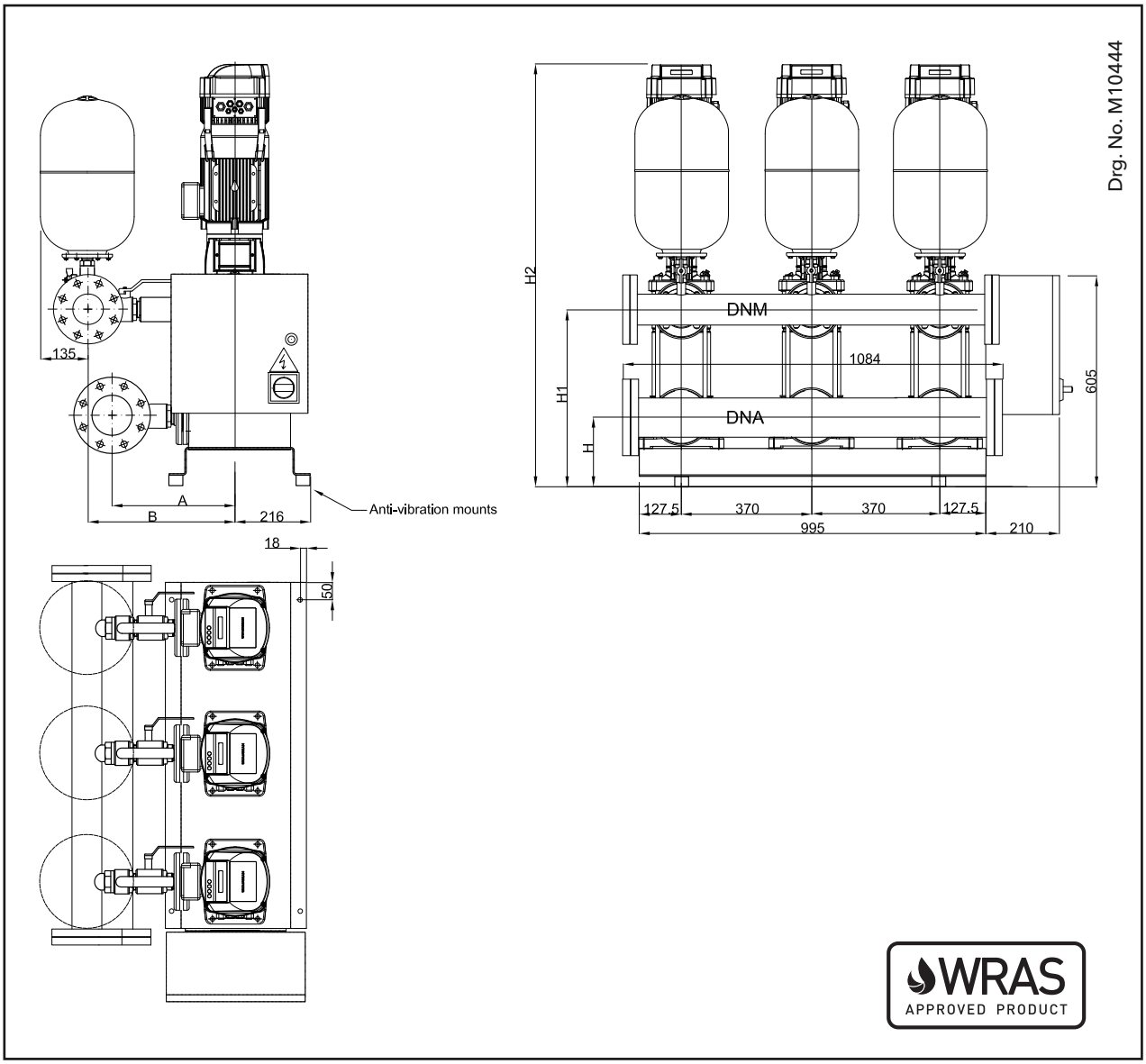

GHV30	DNA	DNM	A	B	H	H1	H2	kg
15SV04R040T	100	80	355	414	200	411	1129	328
15SV05R040T	100	80	355	414	200	459	1177	338
15SV06R055T	100	80	355	414	200	507	1348	349
15SV07R055T	100	80	355	414	200	555	1396	360
15SV08R075T	100	80	355	414	200	603	1436	370
15SV09R075T	100	80	355	414	200	651	1484	381

Dimensions in mm. Tolerance ± 10mm.

GHV30/22SV BOOSTER SETS DIMENSIONS
R VERSION, WRAS APPROVED

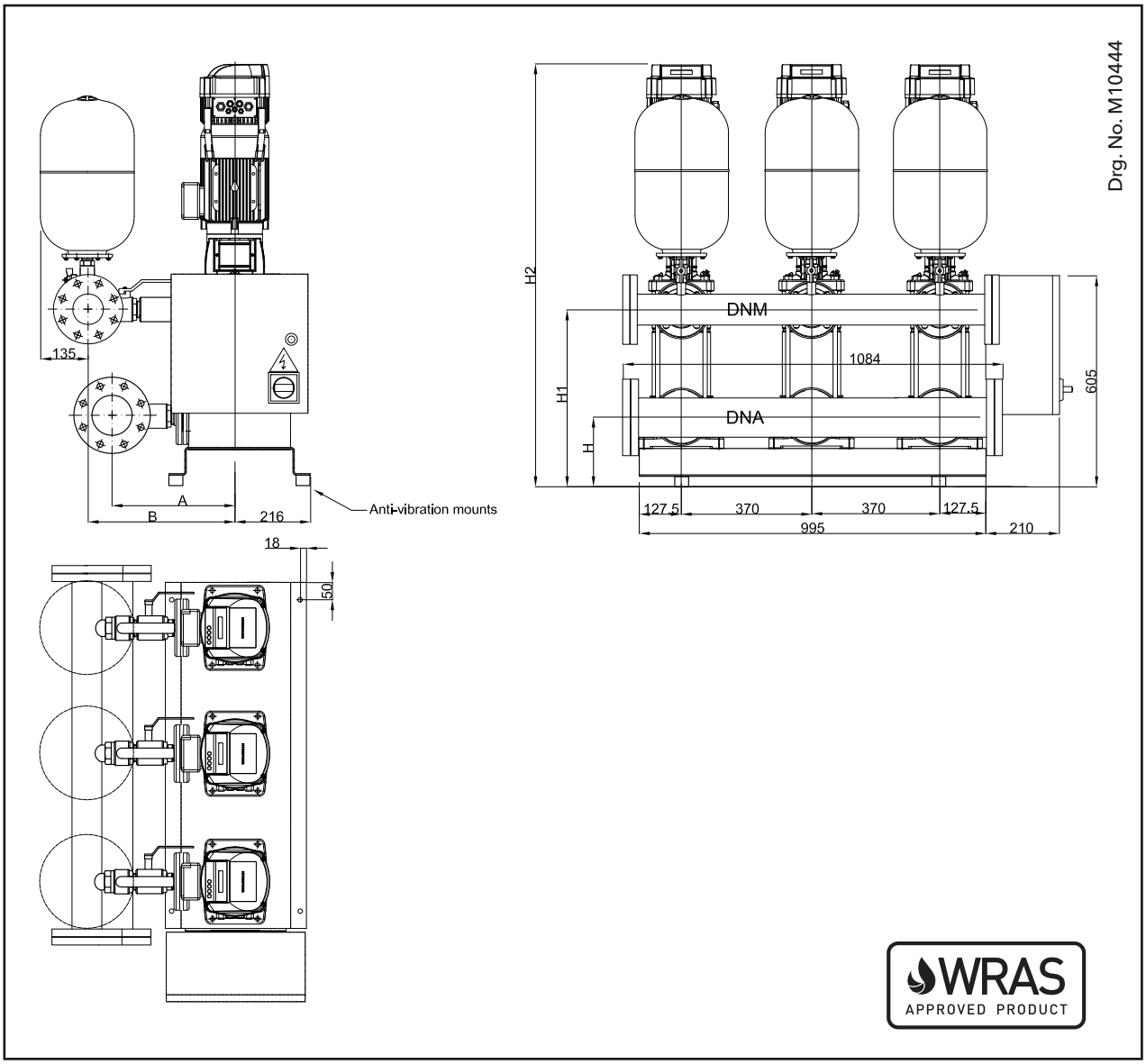

GHV30	DNA	DNM	A	B	H	H1	H2	kg
22SV04R040T	100	100	355	428	200	411	1129	344
22SV05R055T	100	100	355	428	200	459	1300	355
22SV06R075T	100	100	355	428	200	507	1340	366
22SV07R075T	100	100	355	428	200	555	1388	378

Dimensions in mm. Tolerance ± 10mm.

GHV30/3SV BOOSTER SETS DIMENSIONS
F VERSION, WRAS APPROVED

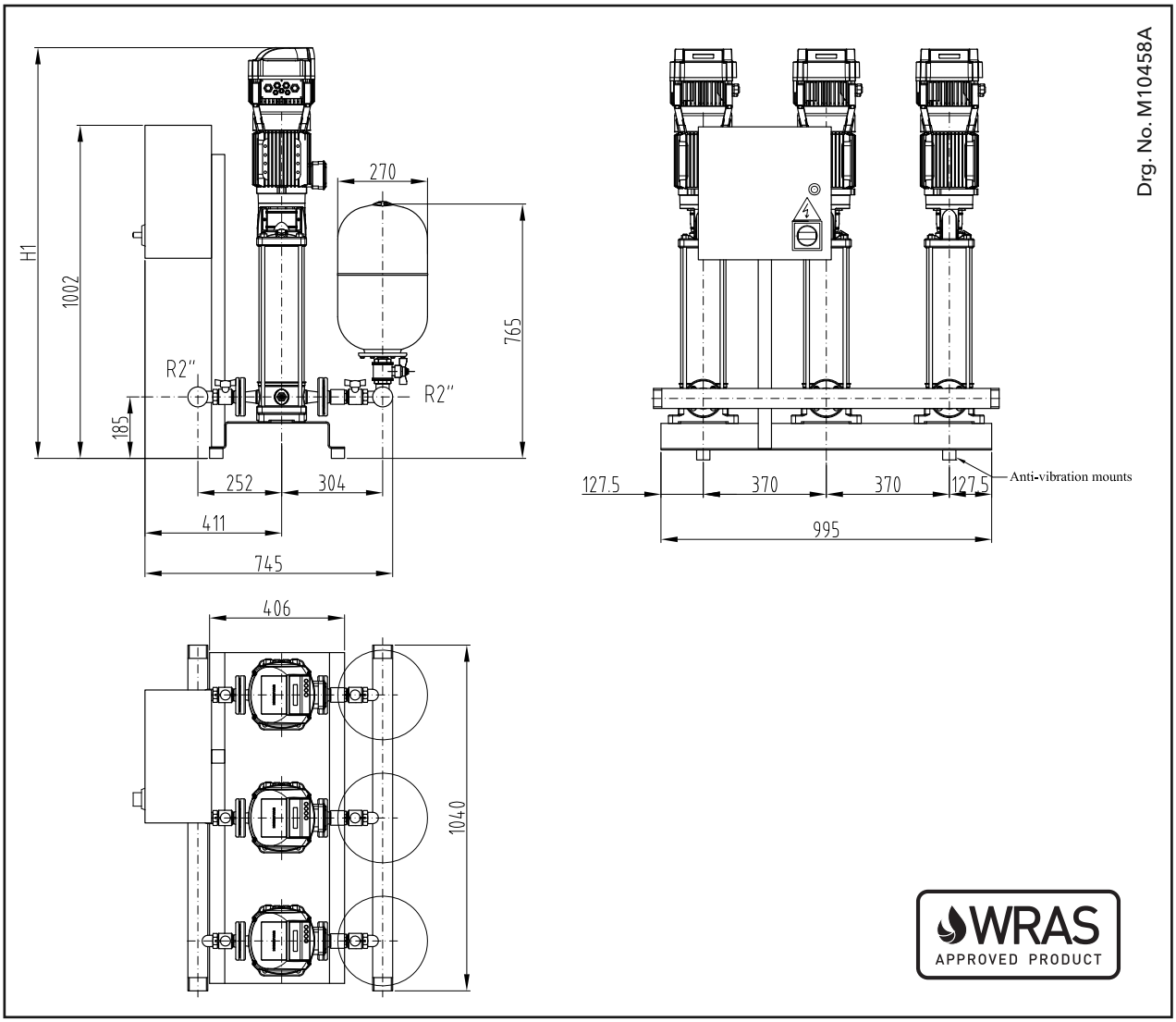

GHV30	DNA	DNM	H1	kg
3SV05F007T	R 2"	R 2"	829	192
3SV06F007T	R 2"	R 2"	849	200
3SV07F007T	R 2"	R 2"	911	201
3SV08F007T	R 2"	R 2"	931	216
3SV09F011T	R 2"	R 2"	951	224
3SV10F011T	R 2"	R 2"	971	225
3SV11F011T	R 2"	R 2"	991	225
3SV12F011T	R 2"	R 2"	1011	227
3SV13F015T	R 2"	R 2"	1076	242
3SV14F015T	R 2"	R 2"	1096	243
3SV16F015T	R 2"	R 2"	1136	249
3SV19F022T	R 2"	R 2"	1196	254
3SV21F022T	R 2"	R 2"	1235	255

Dimensions in mm. Tolerance ± 10mm.

GHV30/5SV BOOSTER SETS DIMENSIONS
F VERSION, WRAS APPROVED

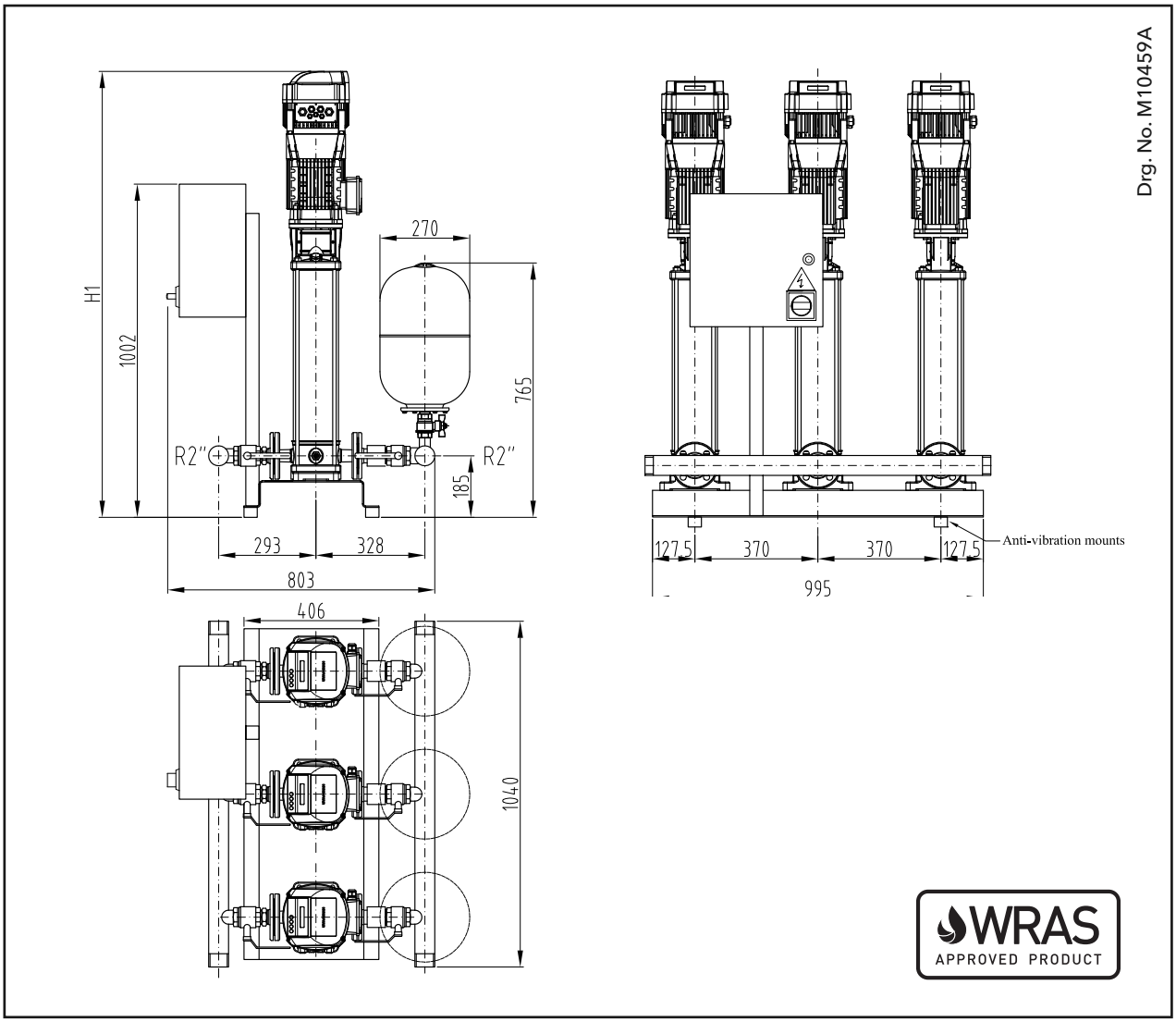

GHV30	DNA	DNM	H1	kg
5SV04F007T	R 2"	R 2"	829	213
5SV05F007T	R 2"	R 2"	896	230
5SV06F011T	R 2"	R 2"	921	236
5SV07F011T	R 2"	R 2"	946	237
5SV08F011T	R 2"	R 2"	971	239
5SV09F015T	R 2"	R 2"	1041	258
5SV10F011T	R 2"	R 2"	1066	260
5SV11F015T	R 2"	R 2"	1091	261
5SV12F022T	R 2"	R 2"	1116	263
5SV13F022T	R 2"	R 2"	1141	264
5SV14F022T	R 2"	R 2"	1166	266
5SV15F022T	R 2"	R 2"	1191	267
5SV16F022T	R 2"	R 2"	1216	267
5SV18F030T	R 2"	R 2"	1276	282
5SV21F030T	R 2"	R 2"	1351	287

Dimensions in mm. Tolerance ± 10mm.

GHV30/10SV BOOSTER SETS DIMENSIONS
F VERSION, WRAS APPROVED

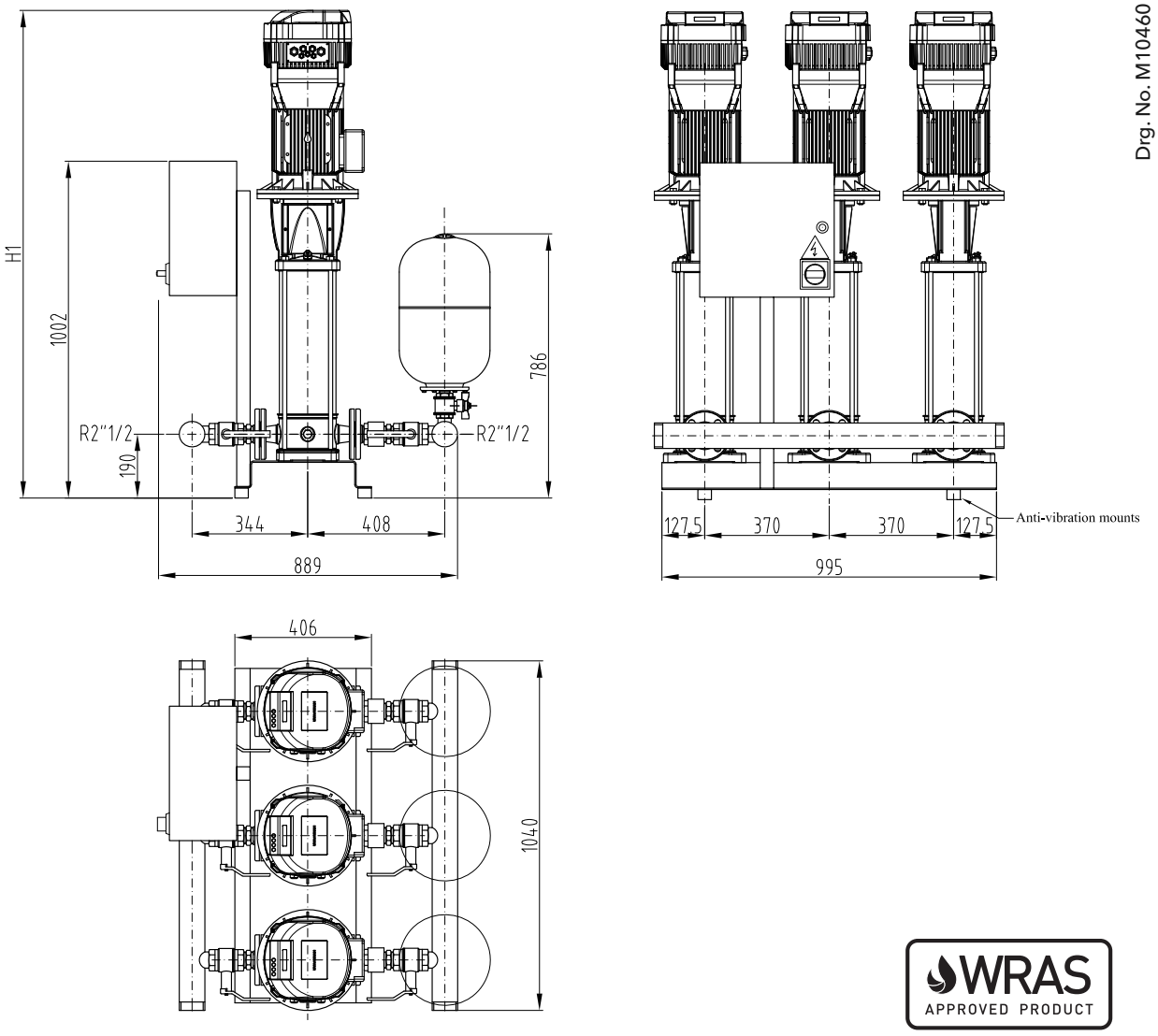

GHV30	DNA	DNM	H1	kg
10SV04F015T	R 2 1/2"	R 2 1/2"	1009	307
10SV05F022T	R 2 1/2"	R 2 1/2"	1041	314
10SV06F022T	R 2 1/2"	R 2 1/2"	1073	321
10SV07F030T	R 2 1/2"	R 2 1/2"	1115	328
10SV08F030T	R 2 1/2"	R 2 1/2"	1147	331
10SV09F040T	R 2 1/2"	R 2 1/2"	1200	335
10SV10F040T	R 2 1/2"	R 2 1/2"	1232	342
10SV11F040T	R 2 1/2"	R 2 1/2"	1264	346
10SV13F055T	R 2 1/2"	R 2 1/2"	1461	350

Dimensions in mm. Tolerance ± 10mm.

GHV30/15SV BOOSTER SETS DIMENSIONS
F VERSION, WRAS APPROVED

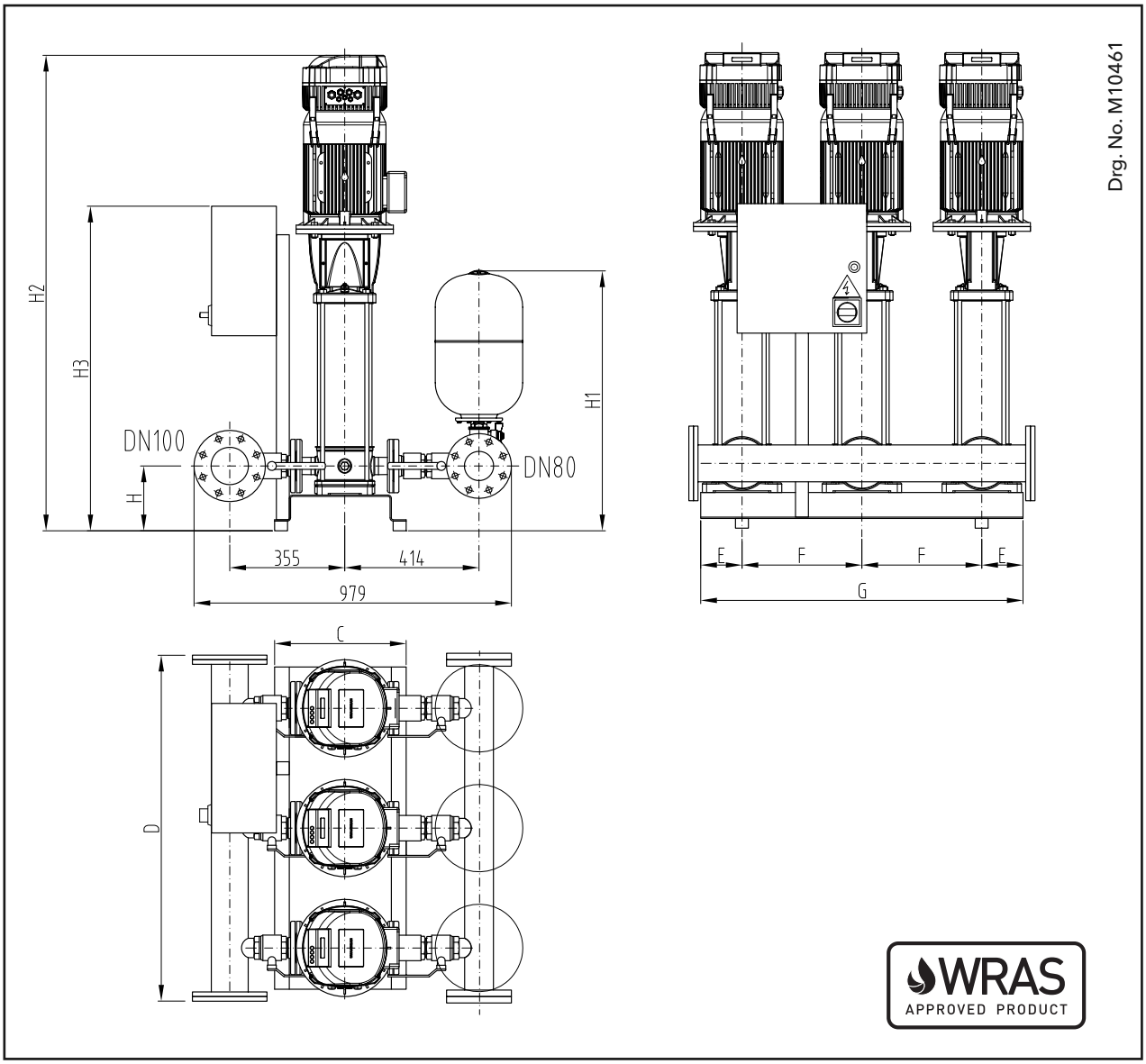

GHV30	DNA	DNM	C	D	E	F	G	H	H1	H2	H3	kg
15SV03F030T	100	80	406	1068	127.5	370	995	200	802	953	1002	307
15SV04F040T	100	80	406	1068	127.5	370	995	200	802	1022	1002	318
15SV05F040T	100	80	406	1068	127.5	370	995	200	802	1193	1002	328
15SV06F055T	100	80	406	1068	127.5	370	995	200	802	1233	1002	339
15SV07F055T	100	80	406	1068	127.5	370	995	200	802	1281	1002	350
15SV08F075T	100	80	406	1068	127.5	370	995	200	802	1420	1002	360
15SV09F075T	100	80	406	1068	127.5	370	995	200	802	1468	1002	371
15SV10F110T	100	80	730	1220	260	440	1400	280	882	1596	1022	382

Dimensions in mm. Tolerance ± 10mm.

GHV30/22SV BOOSTER SETS DIMENSIONS
F VERSION, WRAS APPROVED

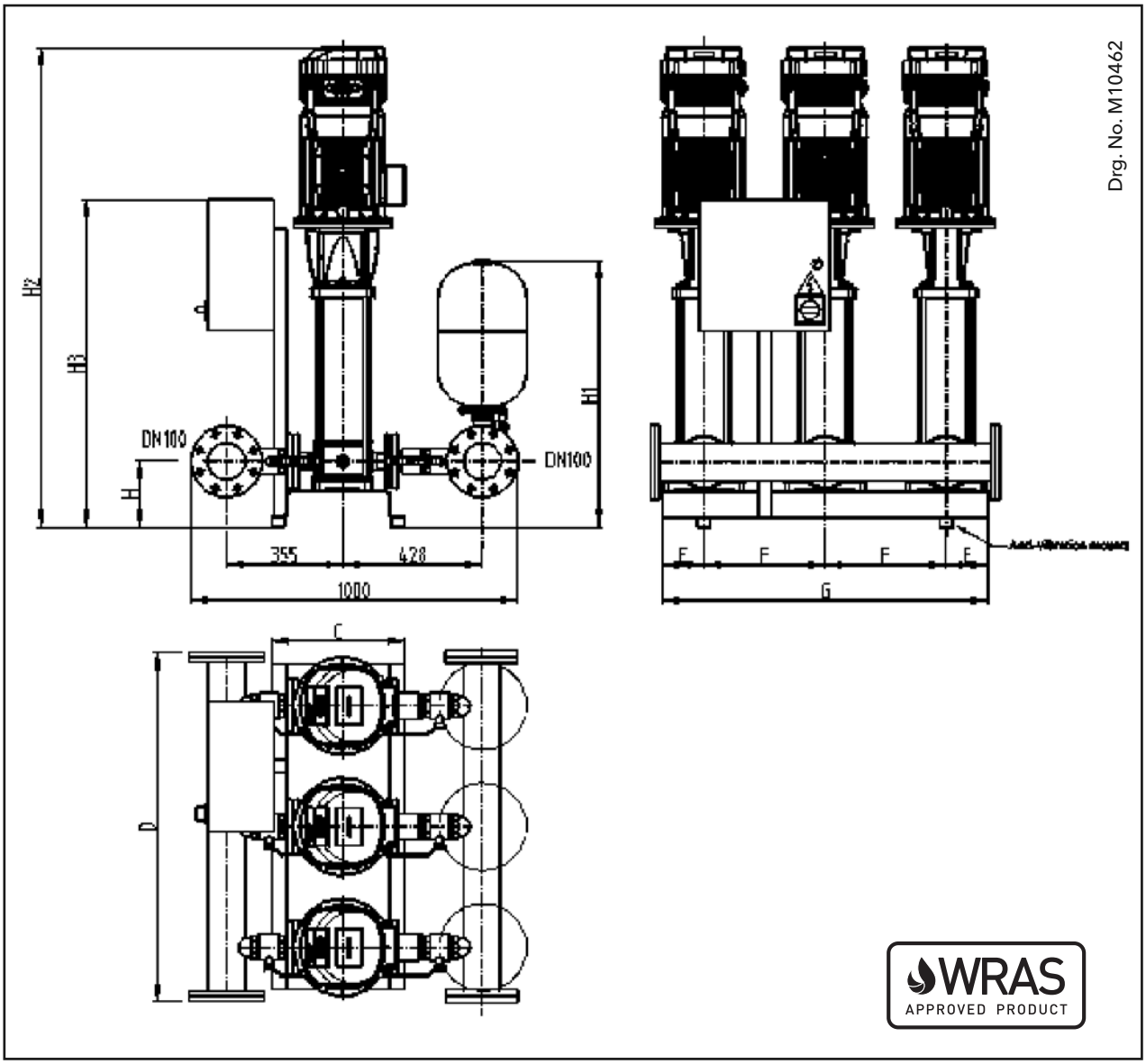

GHV30	DNA	DNM	C	D	E	F	G	H	H1	H2	H3	kg
22SV02F022T	100	100	406	1068	127.5	370	995	200	802	986	1002	311
22SV03F030T	100	100	406	1068	127.5	370	995	200	802	1044	1002	323
22SV04F040T	100	100	406	1068	127.5	370	995	200	802	1113	1002	334
22SV05F055T	100	100	406	1068	127.5	370	995	200	802	1284	1002	345
22SV06F075T	100	100	406	1068	127.5	370	995	200	802	1324	1002	356
22SV07F075T	100	100	406	1068	127.5	370	995	200	802	1372	1002	368
22SV08F110T	100	100	730	1220	260	440	1400	280	882	1591	1022	401
22SV09F110T	100	100	730	1220	260	440	1400	280	882	1639	1022	403
22SV10F110T	100	100	730	1220	260	440	1400	280	882	1687	1022	405

Dimensions in mm. Tolerance ± 10mm.

LOWARA
a xylem brand

LOWARA BOOSTER SETS

WRAS
APPROVED PRODUCT

GHV30/33SV - 92SV BOOSTER SETS DIMENSIONS
F VERSION, WRAS COMPLIANT

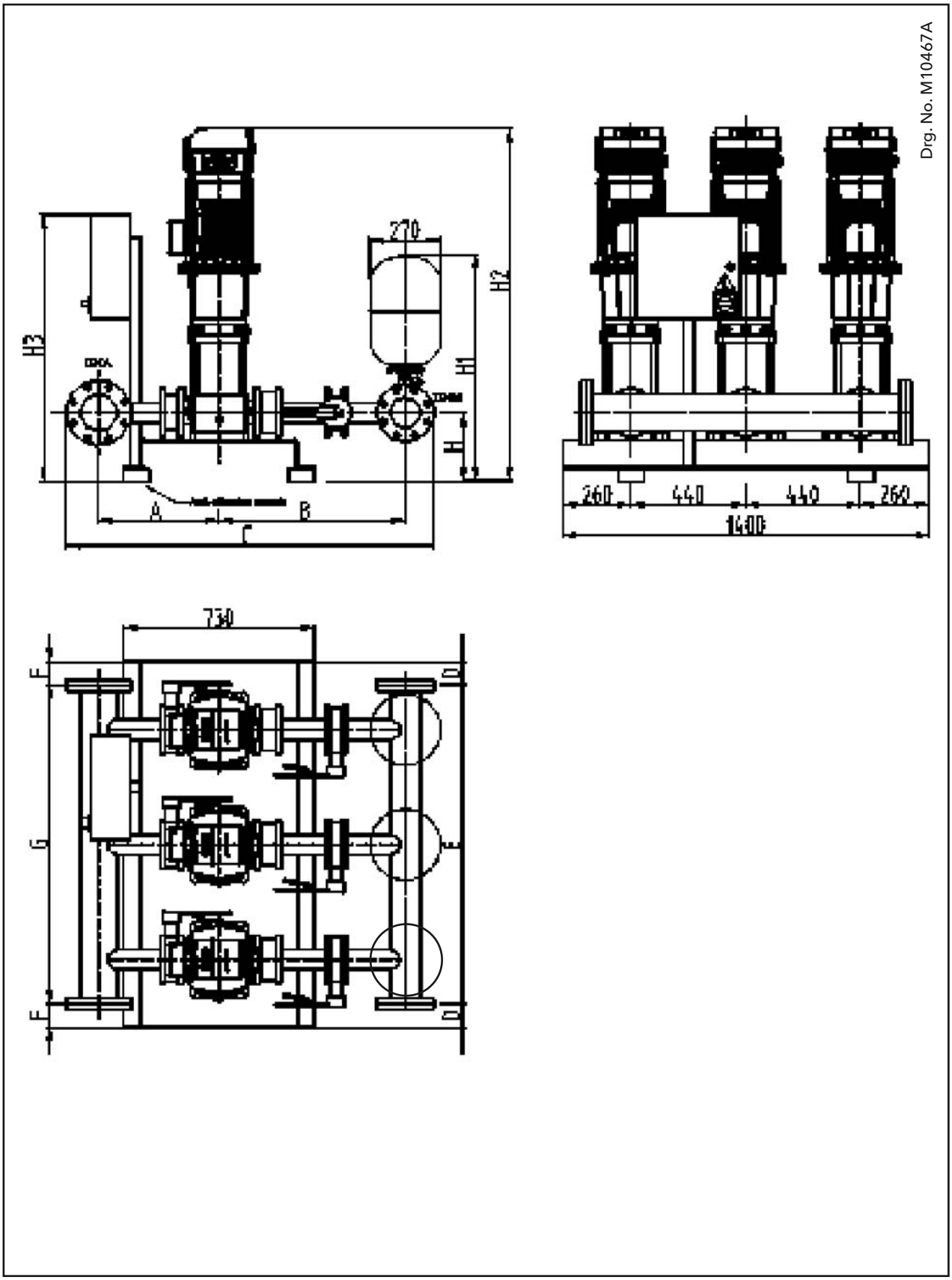

LOWARA
a xylem brand

GHV30/33SV - 92SV BOOSTER SETS DIMENSIONS
F VERSION, WRAS COMPLIANT

GHV 30	DNA	DNM	A	B	C	D	E	F	G	H	H1	H2	H3	kg
33SV1/1AG022T	125	100	460	713	1408	90	780	90	1220	265	860	1082	1026	570
33SV1G030T	125	100	460	713	1408	90	780	90	1220	265	860	1117	1026	570
33SV2/2AG040T	125	100	460	713	1408	90	780	90	1220	265	860	1213	1026	570
33SV2/1AG040T	125	100	460	713	1408	90	780	90	1220	265	860	1213	1026	570
33SV2G055T	125	100	460	713	1408	90	780	90	1220	265	860	1289	1026	675
33SV3/2AG055T	125	100	460	713	1408	90	780	90	1220	265	860	1364	1026	675
33SV3/1AG075T	125	100	460	713	1408	90	780	90	1220	265	860	1356	1026	675
33SV3G075T	125	100	460	713	1408	90	780	90	1220	265	860	1356	1026	675
33SV4/2AG075T	125	100	460	713	1408	90	780	90	1220	265	860	1431	1026	675
33SV4/1AG110T	125	100	460	713	1408	90	780	90	1220	265	860	1527	1026	765
33SV4G110T	125	100	460	713	1408	90	780	90	1220	265	860	1527	1026	765
33SV5/2AG110T	125	100	460	713	1408	90	780	90	1220	265	860	1602	1026	765
33SV5/1AG110T	125	100	460	713	1408	90	780	90	1220	265	860	1602	1026	765
33SV5G150T	125	100	460	713	1408	90	780	90	1220	265	860	1706	1067	990
33SV6/2AG150T	125	100	460	713	1408	90	780	90	1220	265	860	1781	1067	990
33SV6/1AG150T	125	100	460	713	1408	90	780	90	1220	265	860	1781	1067	990
33SV6G150T	125	100	460	713	1408	90	780	90	1220	265	860	1781	1067	990
33SV7/2AG150T	125	100	460	713	1408	90	780	90	1220	265	860	1856	1067	990
46SV1/1AG030T	150	125	498	752	1517	90	1220	70	1260	300	907	1157	916	675
46SV1G040T	150	125	498	752	1517	90	1220	70	1260	300	907	1178	916	675
46SV2/2AG055T	150	125	498	752	1517	90	1220	70	1260	300	907	1329	1067	675
46SV2G075T	150	125	498	752	1517	90	1220	70	1260	300	907	1321	1067	675
46SV3/2AG110T	150	125	498	752	1517	90	1220	70	1260	300	907	1492	1067	975
46SV3G110T	150	125	498	752	1517	90	1220	70	1260	300	907	1492	1067	975
46SV4/2AG150T	150	125	498	752	1517	90	1220	70	1260	300	907	1671	1067	975
46SV4G150T	150	125	498	752	1517	90	1220	70	1260	300	907	1671	1067	975
46SV5/2AG185T	150	125	498	752	1517	90	1220	70	1260	300	907	1746	1147	1125
46SV5G185T	150	125	498	752	1517	90	1220	70	1260	300	907	1746	1147	1125
46SV6/2AG220T	150	125	498	752	1517	90	1220	70	1260	300	907	1821	1147	1200
46SV6G220T	150	125	498	752	1517	90	1220	70	1260	300	907	1821	1147	1200
66SV1/1AG040T	200	150	529	794	1635	70	1260	70	1260	300	934	1203	916	780
66SV1G055T	200	150	529	794	1635	70	1260	70	1260	300	934	1279	1067	780
66SV2/2AG075T	200	150	529	794	1635	70	1260	70	1260	300	934	1361	1067	780
66SV2/1AG110T	200	150	529	794	1635	70	1260	70	1260	300	934	1457	1067	975
66SV2G110T	200	150	529	794	1635	70	1260	70	1260	300	934	1457	1067	975
66SV3/2AG150T	200	150	529	794	1635	70	1260	70	1260	300	934	1651	1067	975
66SV3/1AG150T	200	150	529	794	1635	70	1260	70	1260	300	934	1651	1067	975
66SV3G185T	200	150	529	794	1635	70	1260	70	1260	300	934	1651	1147	1125
66SV4/2AG185T	200	150	529	794	1635	70	1260	70	1260	300	934	1741	1147	1125
66SV4/1AG220T	200	150	529	794	1635	70	1260	70	1260	300	934	1741	1147	1200
66SV4G220T	200	150	529	794	1635	70	1260	70	1260	300	934	1741	1147	1200
92SV1/1AG055T	200	200	529	819	1688	70	1260	70	1260	300	960	1279	1067	825
92SV1G075T	200	200	529	819	1688	70	1260	70	1260	300	960	1271	1067	825
92SV2/2AG110T	200	200	529	819	1688	70	1260	70	1260	300	960	1457	1067	975
92SV2G150T	200	200	529	819	1688	70	1260	70	1260	300	960	1561	1067	975
92SV3/2AG185T	200	200	529	819	1688	70	1260	70	1260	300	960	1651	1147	1125
92SV3G220T	200	200	529	819	1688	70	1260	70	1260	300	960	1651	1147	1200

Dimensions in mm. Tolerance ± 10mm.

GHV30/125SV1-3 BOOSTER SETS DIMENSIONS
F VERSION, WRAS COMPLIANT

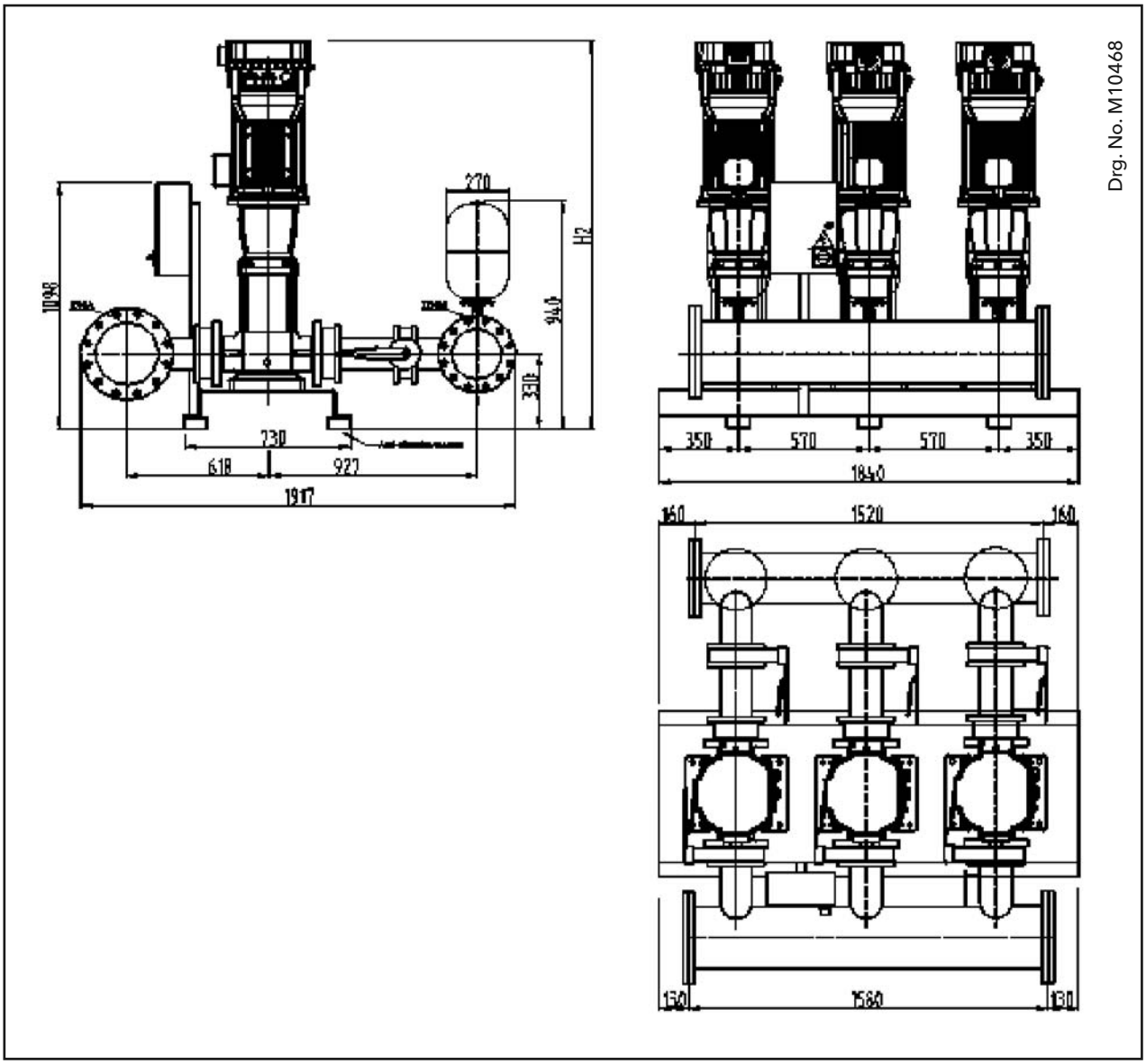

GHV30	DNA	DNM	H2	kg
125SV1G075T	250	200	1400	1160
125SV2G150T	250	200	1750	1300
125SV3G220T	250	200	1900	1370

Dimensions in mm. Tolerance ± 10mm.

LOWARA
a xylem brand

GHV40/5SV BOOSTER SETS DIMENSIONS
F VERSION, WRAS APPROVED

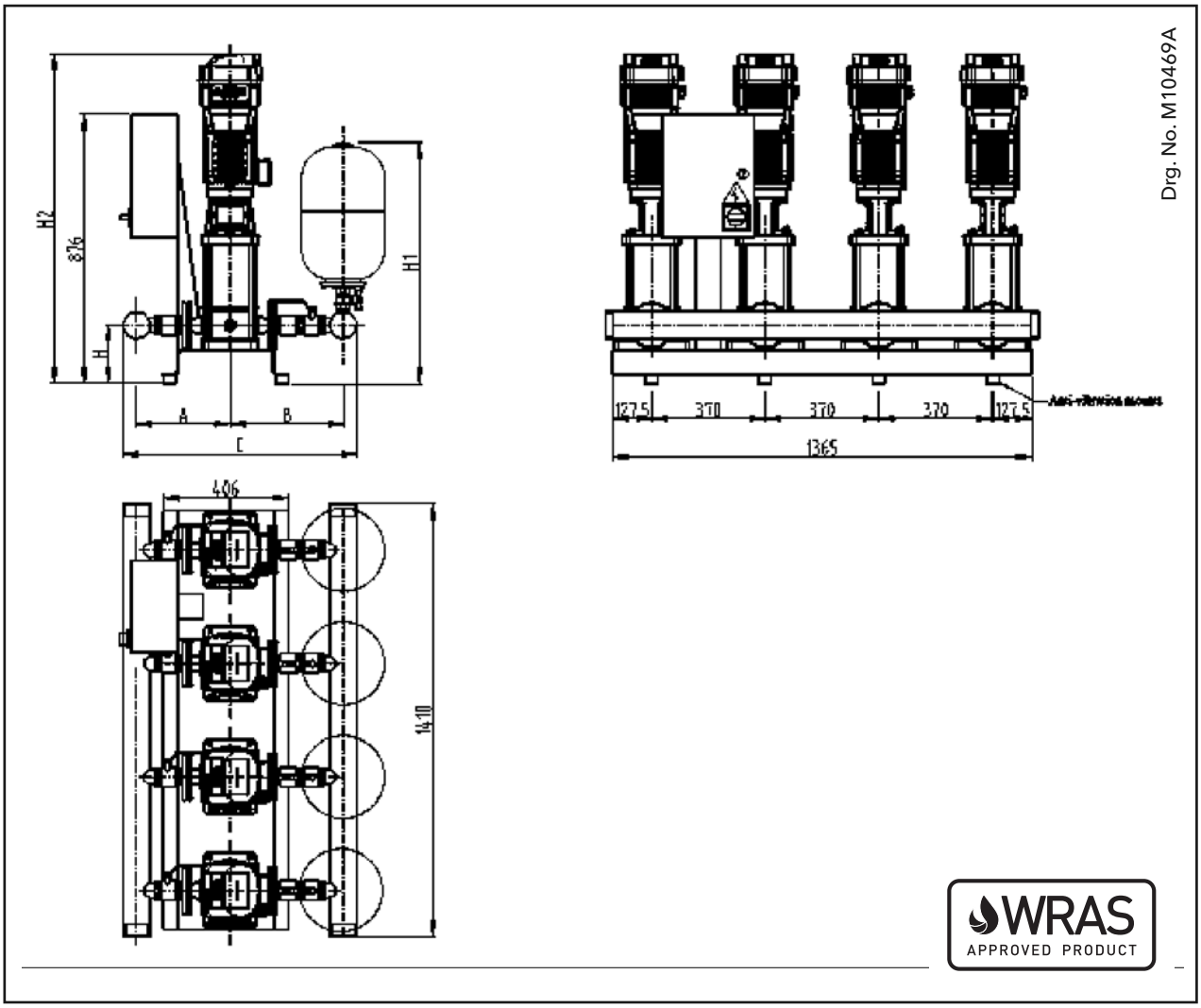

GHV40	DNA	DNM	A	B	C	H	H1	H2	Kg
5SV04F007T	65	50	293	328	769	185	770	829	284
5SV05F007T	65	50	293	328	769	185	770	896	306
5SV06F011T	65	50	293	328	769	185	770	921	314
5SV07F011T	65	50	293	328	769	185	770	946	316
5SV08F011T	65	50	293	328	769	185	770	971	318
5SV09F015T	65	50	293	328	769	185	770	1041	344
5SV10F015T	65	50	293	328	769	185	770	1066	346
5SV11F015T	65	50	293	328	769	185	770	1091	348
5SV12F015T	65	50	293	328	769	185	770	1116	350
5SV13F022T	65	50	293	328	769	185	770	1141	352
5SV14F022T	65	50	293	328	769	185	770	1166	354
5SV15F022T	65	50	293	328	769	185	770	1191	356
5SV16F022T	65	50	293	328	769	185	770	1216	356
5SV18F022T	65	50	293	328	769	185	770	1276	376
5SV21F022T	65	50	293	328	769	185	770	1351	382

Dimensions in mm. Tolerance ± 10mm.

GHV40/10SV BOOSTER SETS DIMENSIONS
F VERSION, WRAS APPROVED

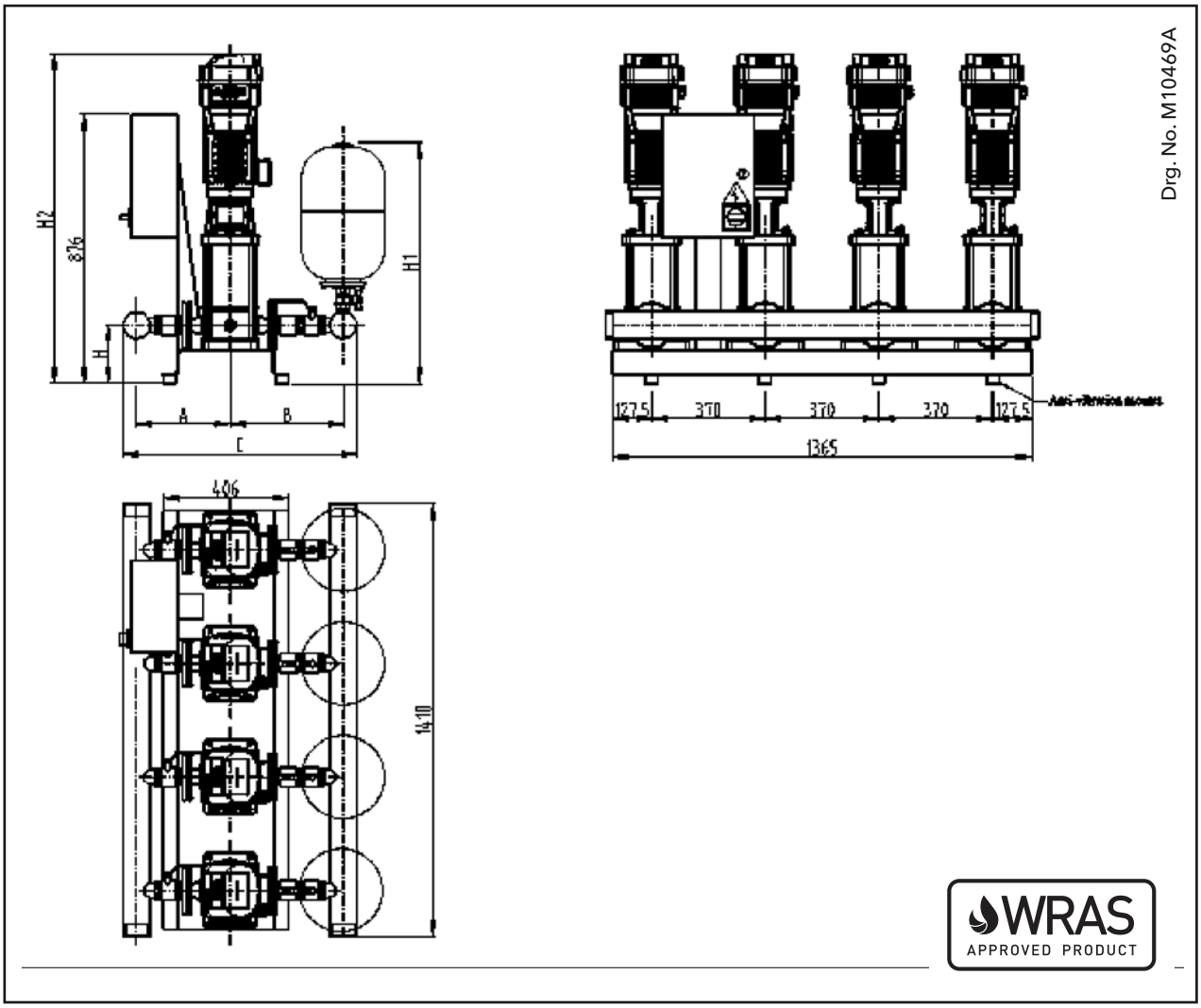

GHV40	DNA	DNM	A	B	C	H	H1	H2	Kg
10SV04F015T	80	80	344	408	827	190	785	1009	430
10SV05F022T	80	80	344	408	827	190	785	1041	440
10SV06F022T	80	80	344	408	827	190	785	1073	450
10SV07F030T	80	80	344	408	827	190	785	1115	460
10SV08F030T	80	80	344	408	827	190	785	1147	465
10SV09F040T	80	80	344	408	827	190	785	1200	470
10SV10F040T	80	80	344	408	827	190	785	1232	480
10SV11F055T	80	80	344	408	827	190	785	1264	485
10SV13F055T	80	80	344	408	827	190	785	1461	490

Dimensions in mm. Tolerance ± 10mm.

GHV40/15SV BOOSTER SETS DIMENSIONS
F VERSION, WRAS APPROVED

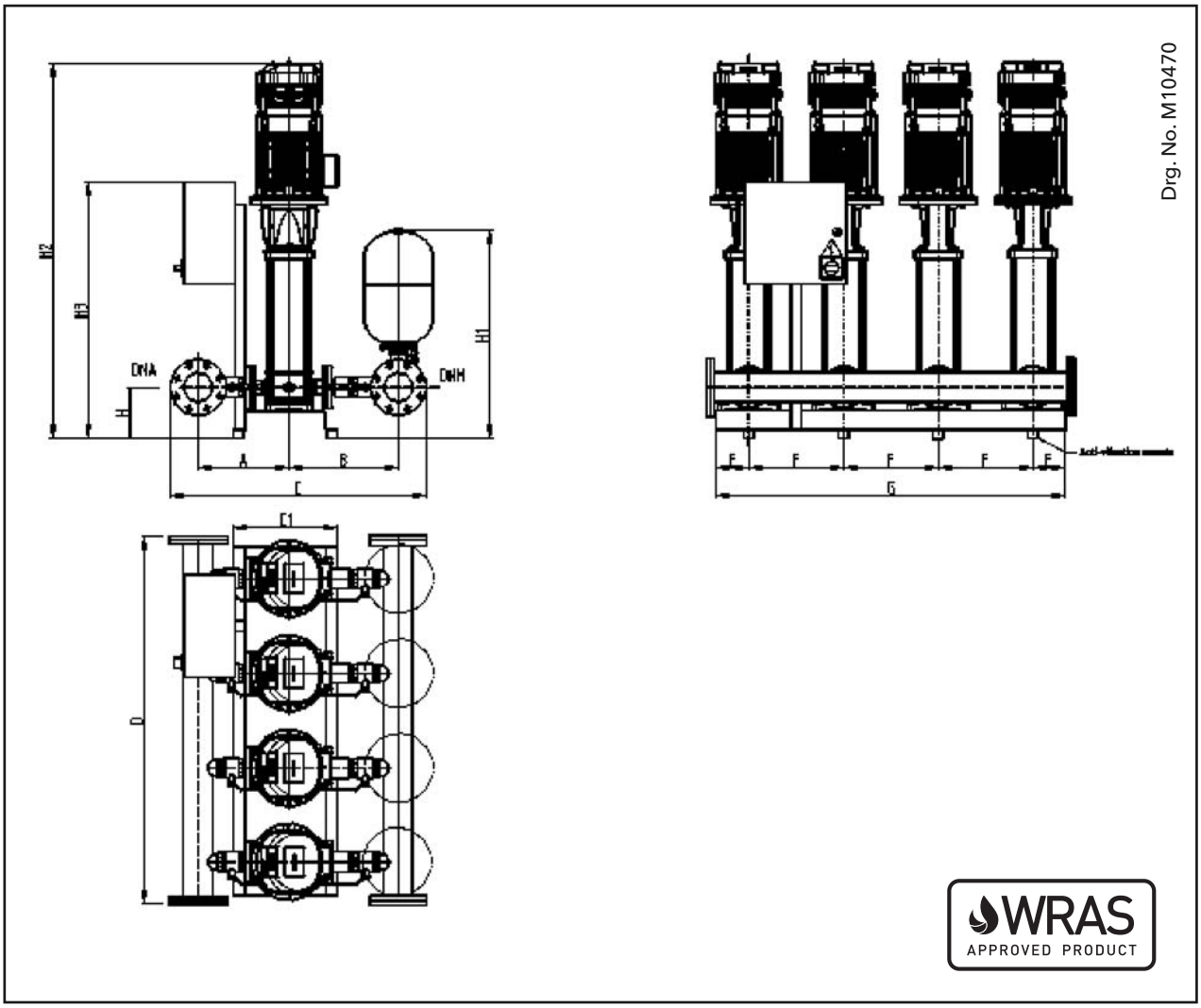

GHV40	DNA	DNM	A	B	C	C1	D	E	F	G	H	H1	H2	H3	Kg
15SV03F030T	100	80	355	414	979	406	1454	128	370	1365	200	807	1045	876	430
15SV04F040T	100	80	355	414	979	406	1454	128	370	1365	200	807	1114	876	445
15SV05F040T	100	80	355	414	979	406	1454	128	370	1365	200	807	1162	876	460
15SV06F055T	100	80	355	414	979	406	1454	128	370	1365	200	807	1333	876	475
15SV07F055T	100	80	355	414	979	406	1454	128	370	1365	200	807	1381	876	490
15SV08F075T	100	80	355	414	979	406	1454	128	370	1365	200	807	1421	1223	505
15SV09F075T	100	80	355	414	979	406	1454	128	370	1365	200	807	1469	1223	520
15SV10F110T	100	80	355	414	979	730	1664	280	440	1880	280	887	1658	1243	535

Dimensions in mm. Tolerance ± 10mm.

GHV40/22SV BOOSTER SETS DIMENSIONS
F VERSION, WRAS APPROVED

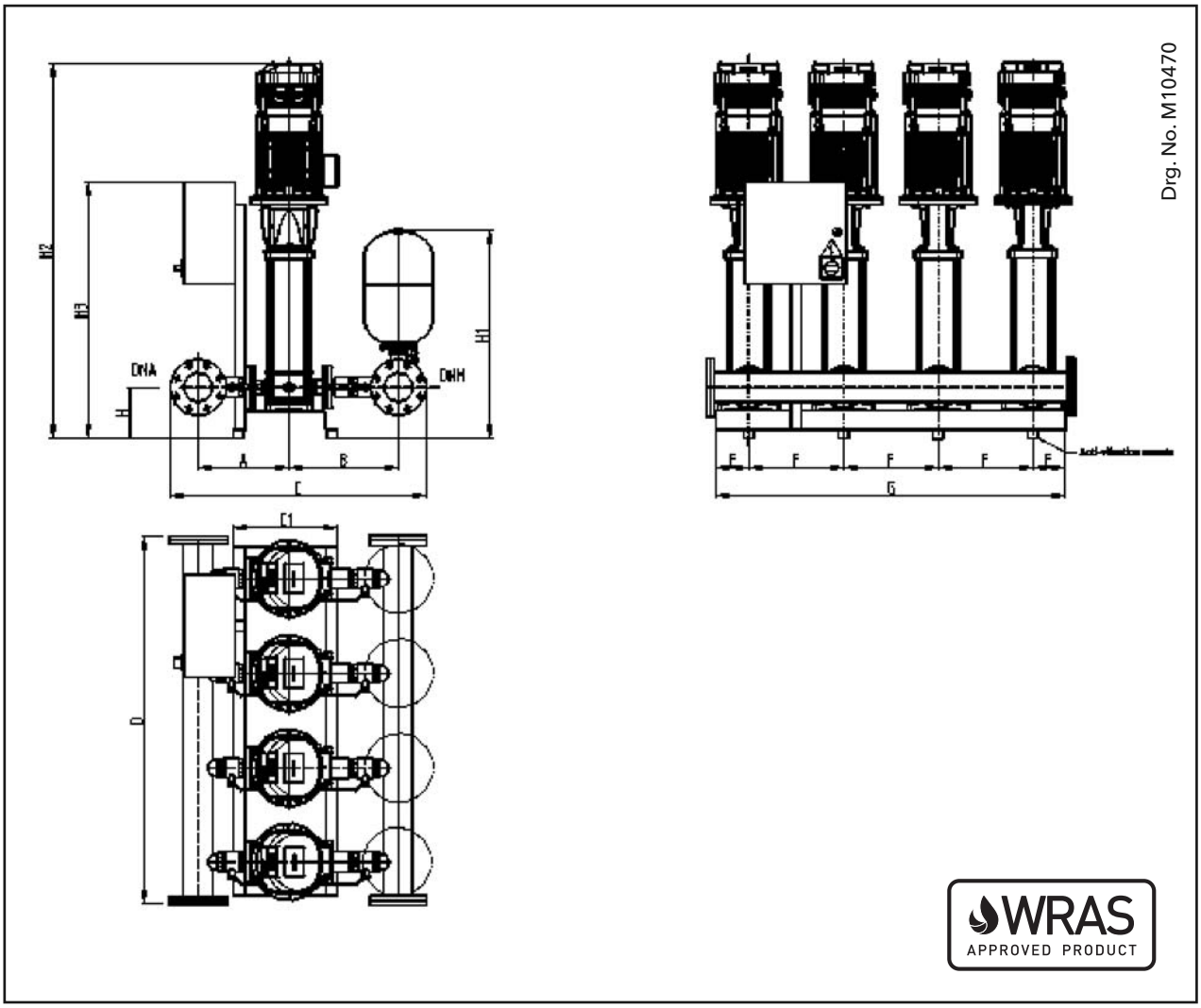

GHV40	DNA	DNM	A	B	C	C1	D	E	F	G	H	H1	H2	H3	Kg
22SV02F022T	100	100	355	428	1020	406	1454	128	370	1365	200	802	987	876	415
22SV03F030T	100	100	355	428	1020	406	1454	128	370	1365	200	802	1035	876	430
22SV04F040T	100	100	355	428	1020	406	1454	128	370	1365	200	802	1114	876	445
22SV05F055T	100	100	355	428	1020	406	1454	128	370	1365	200	802	1285	876	460
22SV06F075T	100	100	355	428	1020	406	1454	128	370	1365	200	802	1325	1324	475
22SV07F075T	100	100	355	428	1020	406	1454	128	370	1365	200	802	1373	1372	490
22SV08F110T	100	100	355	428	1020	730	1664	280	440	1880	280	887	1562	1243	535
22SV09F110T	100	100	355	428	1020	730	1664	280	440	1880	280	887	1610	1243	540
22SV10F110T	100	100	355	428	1020	730	1664	280	440	1880	280	887	1658	1243	405

Dimensions in mm. Tolerance ± 10mm.

LOWARA BOOSTER SETS

WRAS APPROVED PRODUCT

GHV40/33SV - 92SV BOOSTER SETS DIMENSIONS
F VERSION, WRAS COMPLIANT

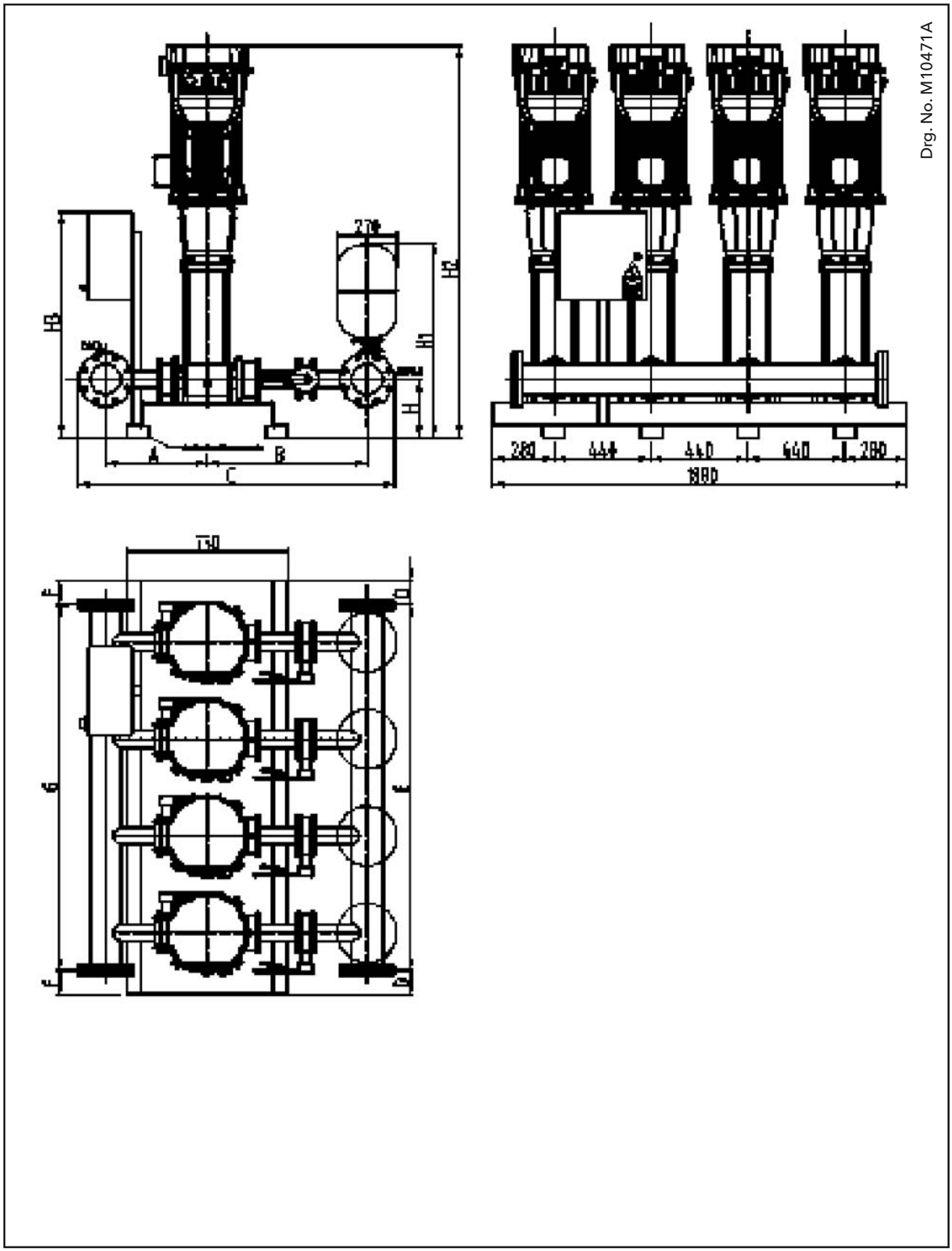

LOWARA
a xylem brand

GHV40/33SV - 92SV BOOSTER SETS DIMENSIONS
F VERSION, WRAS COMPLIANT

GHV 40	DNA	DNM	A	B	C	D	E	F	G	H	H1	H2	H3	kg
33SV1/1AG022T	125	125	460	726	1437	110	1660	110	1660	265	885	1082	1147	760
33SV1G030T	125	125	460	726	1437	110	1660	110	1660	265	885	1117	1147	760
33SV2/2AG040T	125	125	460	726	1437	110	1660	110	1660	265	885	1213	1147	760
33SV2/1AG040T	125	125	460	726	1437	110	1660	110	1660	265	885	1213	1147	760
33SV2G055T	125	125	460	726	1437	110	1660	110	1660	265	885	1289	1147	900
33SV3/2AG055T	125	125	460	726	1437	110	1660	110	1660	265	885	1364	1147	900
33SV3/1AG075T	125	125	460	726	1437	110	1660	110	1660	265	885	1356	1026	900
33SV3G075T	125	125	460	726	1437	110	1660	110	1660	265	885	1356	1026	900
33SV4/2AG075T	125	125	460	726	1437	110	1660	110	1660	265	885	1431	1026	900
33SV4/1AG110T	125	125	460	726	1437	110	1660	110	1660	265	885	1527	1026	1020
33SV4G110T	125	125	460	726	1437	110	1660	110	1660	265	885	1527	1026	1020
33SV5/2AG110T	125	125	460	726	1437	110	1660	110	1660	265	885	1602	1026	1020
33SV5/1AG110T	125	125	460	726	1437	110	1660	110	1660	265	885	1602	1026	1020
33SV5G150T	125	125	460	726	1437	110	1660	110	1660	265	885	1706	1026	1320
33SV6/2AG150T	125	125	460	726	1437	110	1660	110	1660	265	885	1781	1026	1320
33SV6/1AG150T	125	125	460	726	1437	110	1660	110	1660	265	885	1781	1067	1320
33SV6G150T	125	125	460	726	1437	110	1660	110	1660	265	885	1781	1067	1320
33SV7/2AG150T	125	125	460	726	1437	110	1660	110	1660	265	885	1856	1067	1320
46SV1/1AG030T	150	150	498	766	1548	90	1700	90	1700	300	934	1157	1147	900
46SV1G040T	150	150	498	766	1548	90	1700	90	1700	300	934	1178	1147	900
46SV2/2AG055T	150	150	498	766	1548	90	1700	90	1700	300	934	1329	1147	900
46SV2G075T	150	150	498	766	1548	90	1700	90	1700	300	934	1321	1067	900
46SV3/2AG110T	150	150	498	766	1548	90	1700	90	1700	300	934	1492	1067	1300
46SV3G110T	150	150	498	766	1548	90	1700	90	1700	300	934	1492	1067	1300
46SV4/2AG150T	150	150	498	766	1548	90	1700	90	1700	300	934	1671	1067	1300
46SV4G150T	150	150	498	766	1548	90	1700	90	1700	300	934	1671	1067	1300
46SV5/2AG185T	150	150	498	766	1548	90	1700	90	1700	300	934	1746	1171	1500
46SV5G185T	150	150	498	766	1548	90	1700	90	1700	300	934	1746	1171	1500
46SV6/2AG220T	150	150	498	766	1548	90	1700	90	1700	300	934	1821	1171	1590
46SV6G220T	150	150	498	766	1548	90	1700	90	1700	300	934	1821	1171	1590
66SV1/1AG040T	200	200	529	819	1688	90	1700	90	1700	300	960	1203	1147	1040
66SV1G055T	200	200	529	819	1688	90	1700	90	1700	300	960	1279	1147	1040
66SV2/2AG075T	200	200	529	819	1688	90	1700	90	1700	300	960	1361	1244	1040
66SV2/1AG110T	200	200	529	819	1688	90	1700	90	1700	300	960	1457	1244	1300
66SV2G110T	200	200	529	819	1688	90	1700	90	1700	300	960	1457	1244	1300
66SV3/2AG150T	200	200	529	819	1688	90	1700	90	1700	300	960	1651	1244	1300
66SV3/1AG150T	200	200	529	819	1688	90	1700	90	1700	300	960	1651	1244	1300
66SV3G185T	200	200	529	819	1688	90	1700	90	1700	300	960	1651	1171	1500
66SV4/2AG185T	200	200	529	819	1688	90	1700	90	1700	300	960	1741	1171	1500
66SV4/1AG220T	200	200	529	819	1688	90	1700	90	1700	300	960	1741	1171	1590
66SV4G220T	200	200	529	819	1688	90	1700	90	1700	300	960	1741	1171	1590
92SV1/1AG055T	250	200	556	819	1748	90	1700	60	1760	300	960	1279	1147	1100
92SV1G075T	250	200	556	819	1748	90	1700	60	1760	300	960	1271	1244	1100
92SV2/2AG110T	250	200	556	819	1748	90	1700	60	1760	300	960	1457	1244	1300
92SV2G150T	250	200	556	819	1748	90	1700	60	1760	300	960	1561	1244	1300
92SV3/2AG185T	250	200	556	819	1748	90	1700	60	1760	300	960	1651	1171	1500
92SV3G220T	250	200	556	819	1748	90	1700	60	1760	300	960	1651	1171	1590

Dimensions in mm. Tolerance ± 10mm.

GHV40/125SV1 - 3 BOOSTER SETS DIMENSIONS
F VERSION, WRAS COMPLIANT

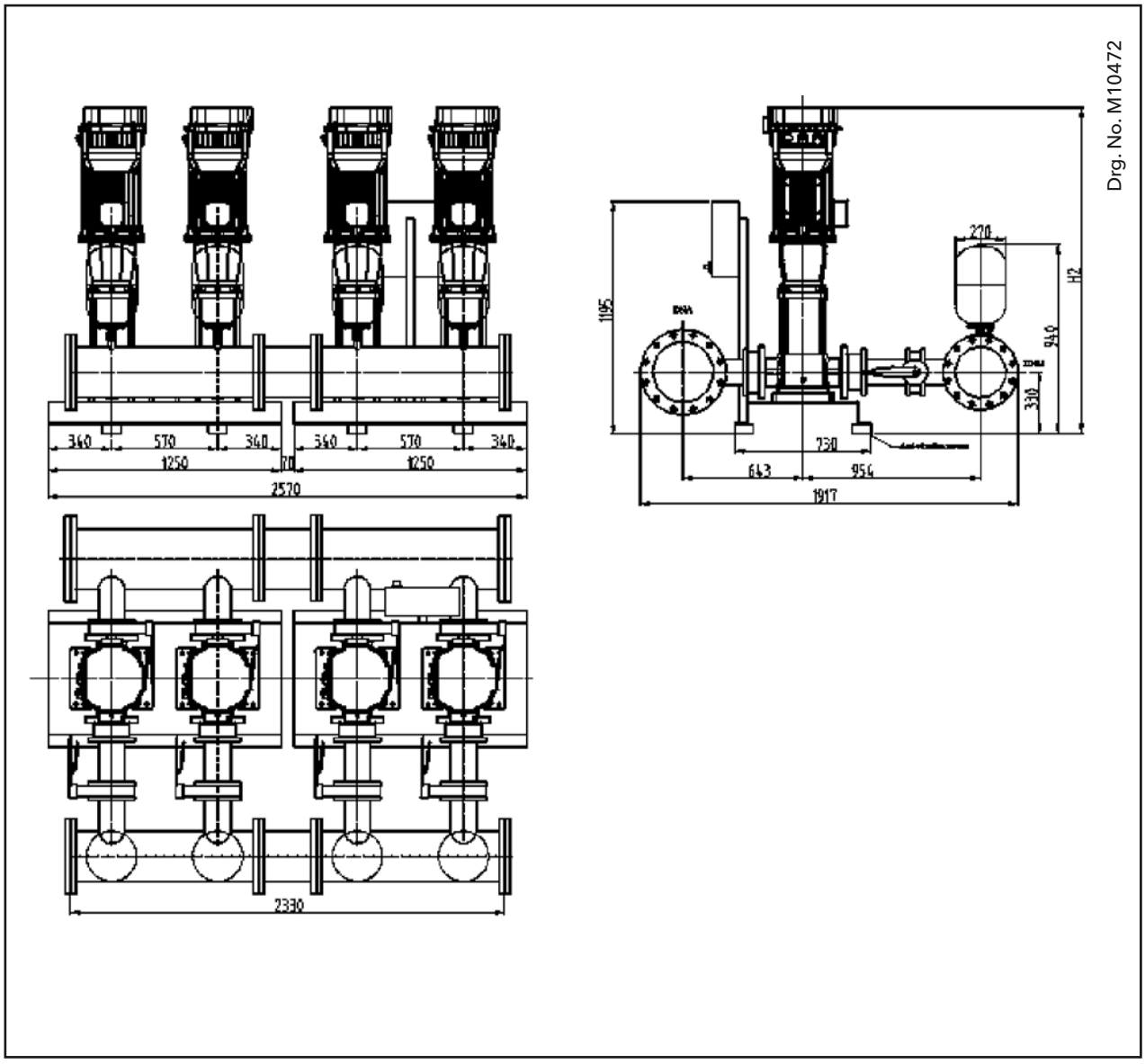

GHV40	DNA	DNM	H2	kg
125SV1G075T	300	250	1400	1400
125SV2G150T	300	250	1750	1670
125SV3G220T	300	250	1900	1790

Dimensions in mm. Tolerance ± 10mm.

1SV - 1HMS SERIES, GHV CURVES
OPERATING CHARACTERISTICS AT 50 Hz, 2 POLES

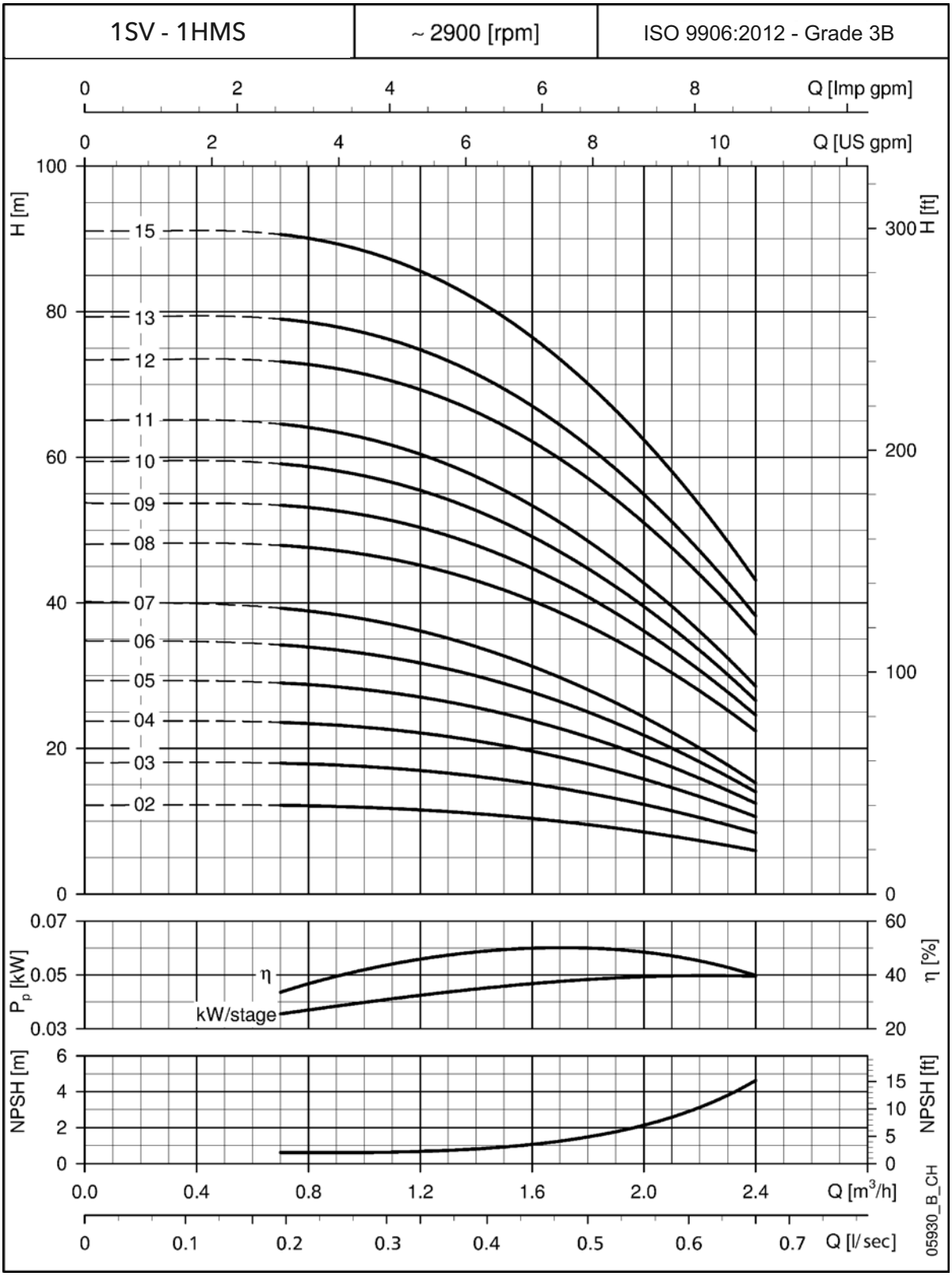

These performances are valid for liquids with density 1000 kg/m³ and kinematic viscosity 1 mm²/s.
Booster Sets which are above 16bar pressure rating are available on request.
Performance curves based on a single pump running, set losses are not included

1SV - 1HMS SERIES, GHV CURVES
OPERATING CHARACTERISTICS AT 50 Hz, 2 POLES

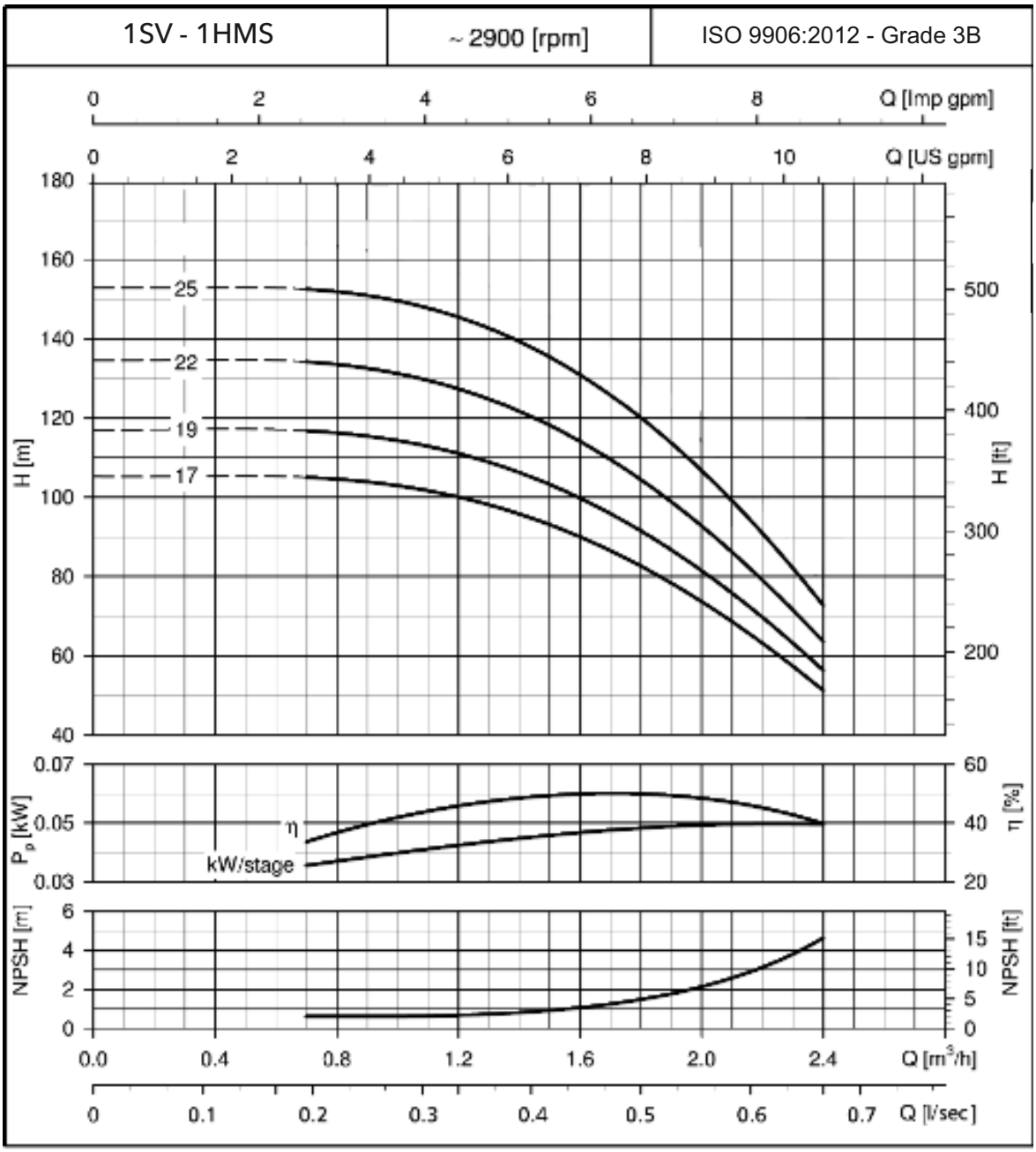

These performances are valid for liquids with a density of 1000 kg/m³ and kinematic viscosity of 1 mm²/s.
Booster Sets which are above 16bar pressure rating are available on request.
Performance curves based on a single pump running, set losses are not included

3SV - 3HMS SERIES, GHV CURVES
OPERATING CHARACTERISTICS AT 50 Hz, 2 POLES

3SV - 3HMS	~ 2900 [rpm]	ISO 9906:2012 - Grade 3B

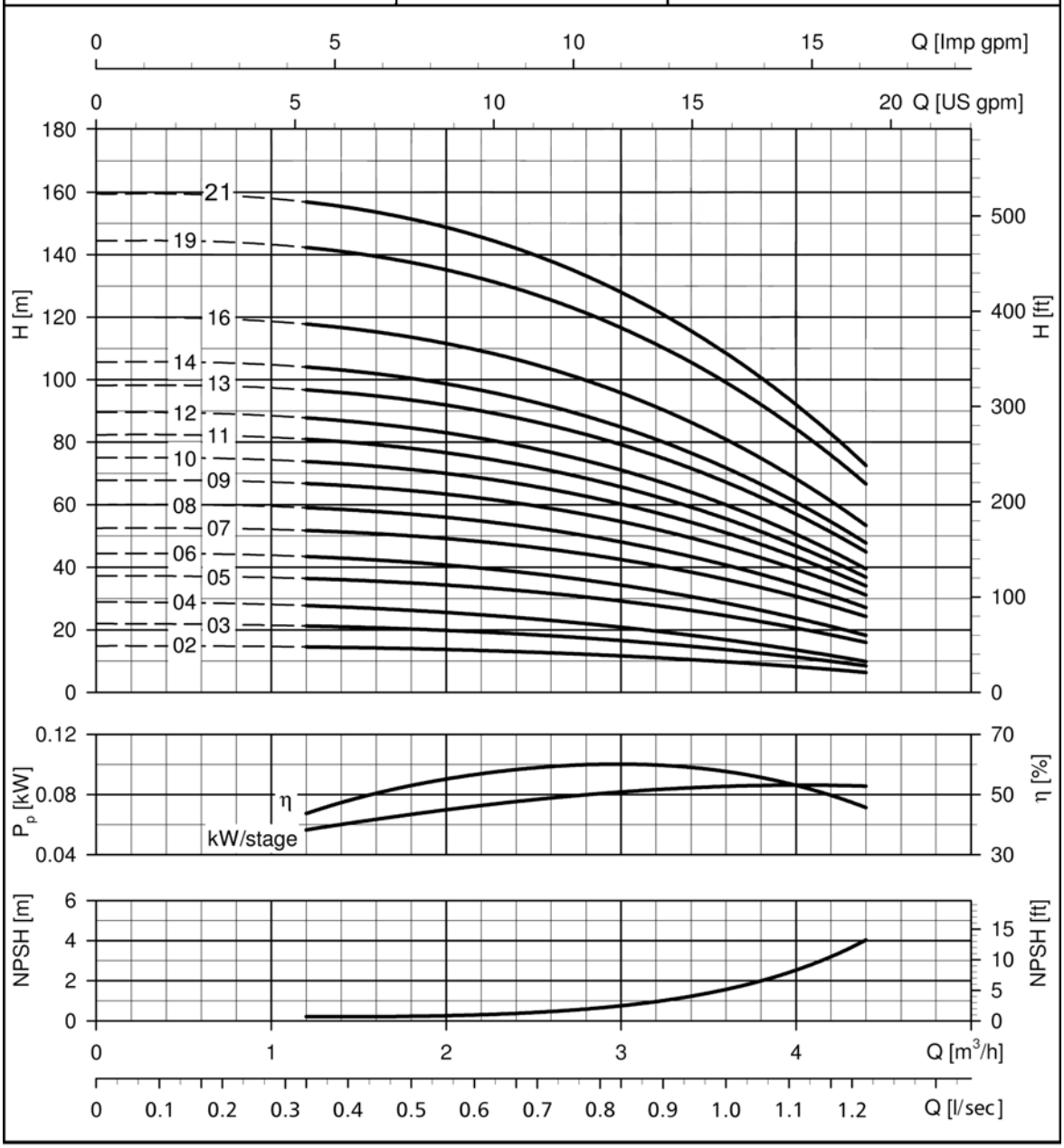

These performances are valid for liquids with density 1.0 kg/dm³ and kinematic viscosity 1 mm²/s.
Booster Sets which are above 16bar pressure rating are available on request.
Performance curves based on a single pump running, set losses are not included

5SV - 5HMS SERIES, GHV CURVES
OPERATING CHARACTERISTICS AT 50 Hz, 2 POLES

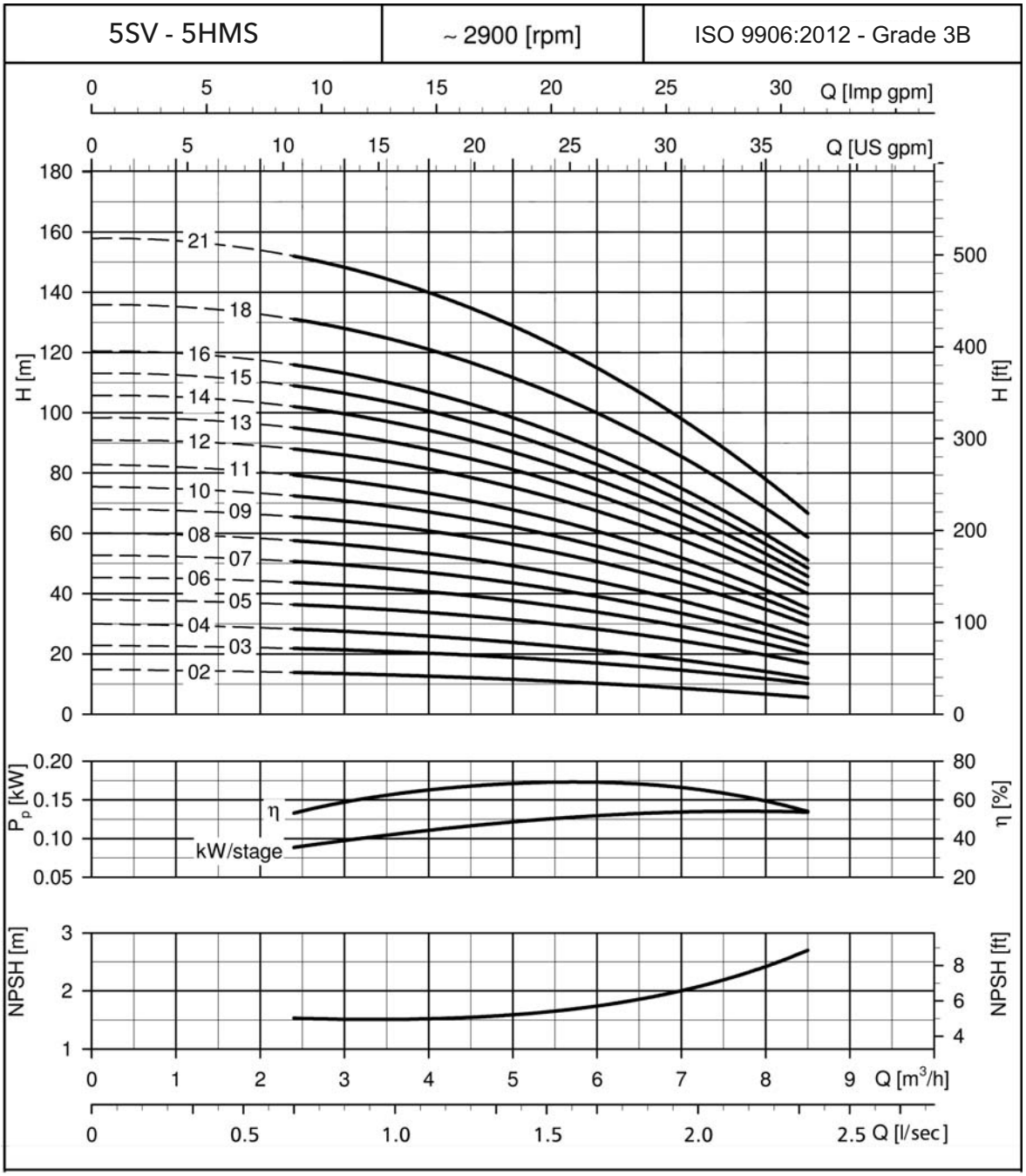

These performances are valid for liquids with density 1000 kg/m³ and kinematic viscosity 1 mm²/s.
Booster Sets which are above 16bar pressure rating are available on request.
Performance curves based on a single pump running, set losses are not included

10SV - 10HMS SERIES, GHV CURVES
OPERATING CHARACTERISTICS AT 50 Hz, 2 POLES

10SV - 10HMS	~ 2900 [rpm]	ISO 9906:2012 - Grade 3B

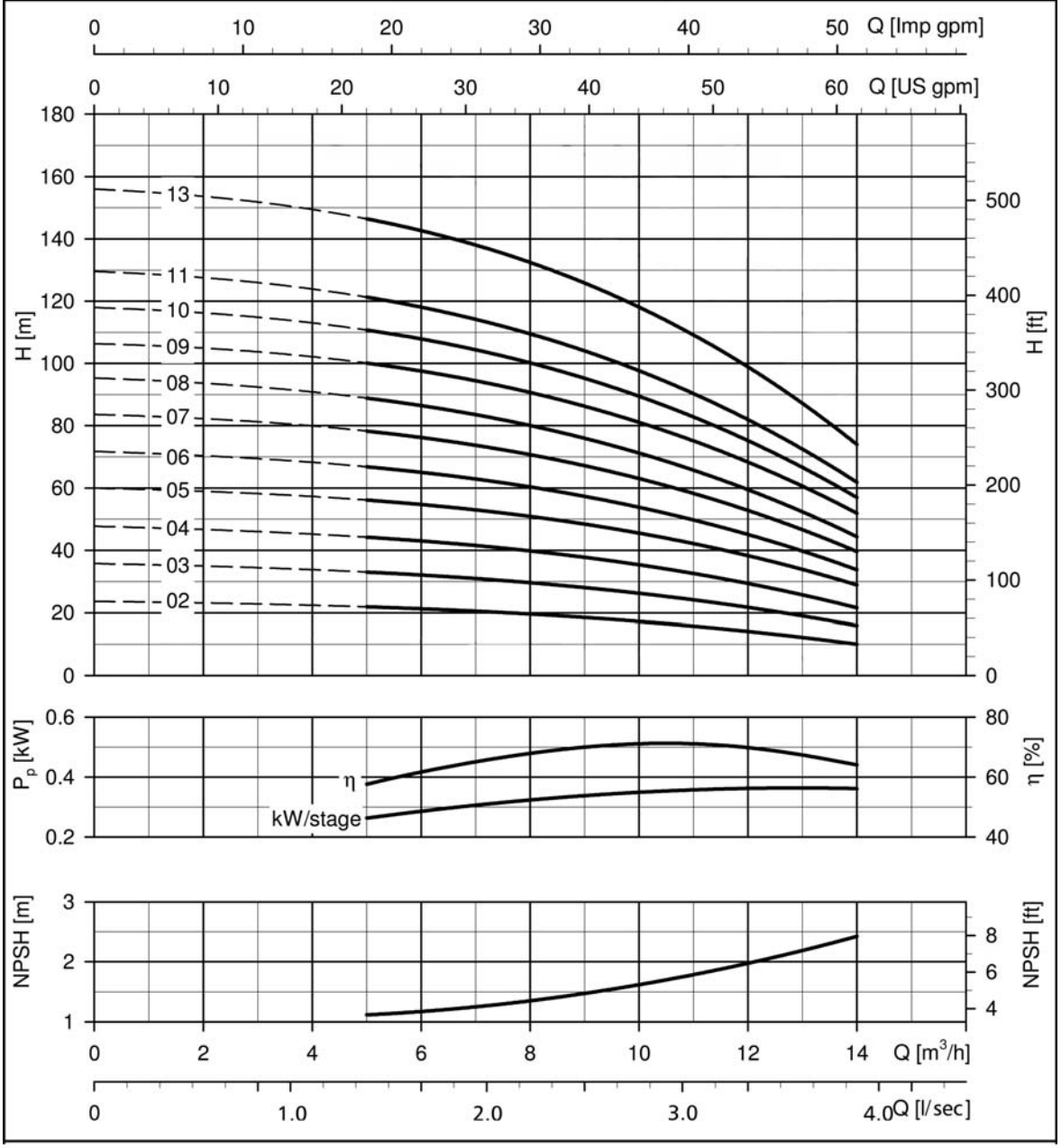

These performances are valid for liquids with density 1000 kg/m³ and kinematic viscosity 1 mm²/s.
Booster Sets which are above 16bar pressure rating are available on request.
Performance curves based on a single pump running, set losses are not included

15SV - 15HMS UP TO 7 STAGES SERIES, GHV CURVES OPERATING CHARACTERISTICS AT 50 Hz, 2 POLES

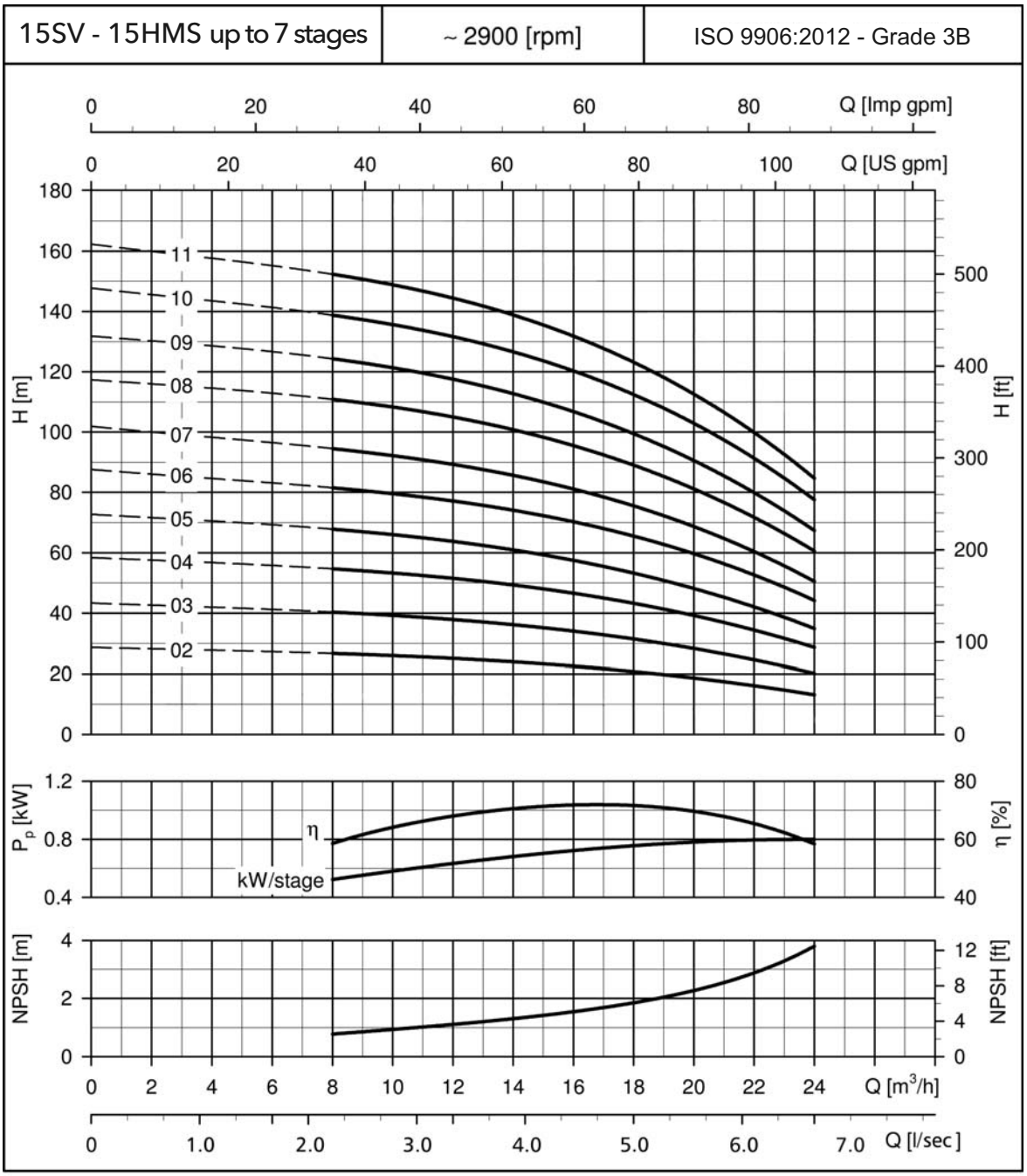

These performances are valid for liquids with density 1000 kg/m³ and kinematic viscosity 1 mm²/s.
Booster Sets which are above 16bar pressure rating are available on request.
Performance curves based on a single pump running, set losses are not included

22SV - 22HMS UP TO 5 STAGES SERIES, GHV CURVES OPERATING CHARACTERISTICS AT 50 Hz, 2 POLES

22SV - 22HMS up to 5 stages	~ 2900 [rpm]	ISO 9906:2012 - Grade 3B

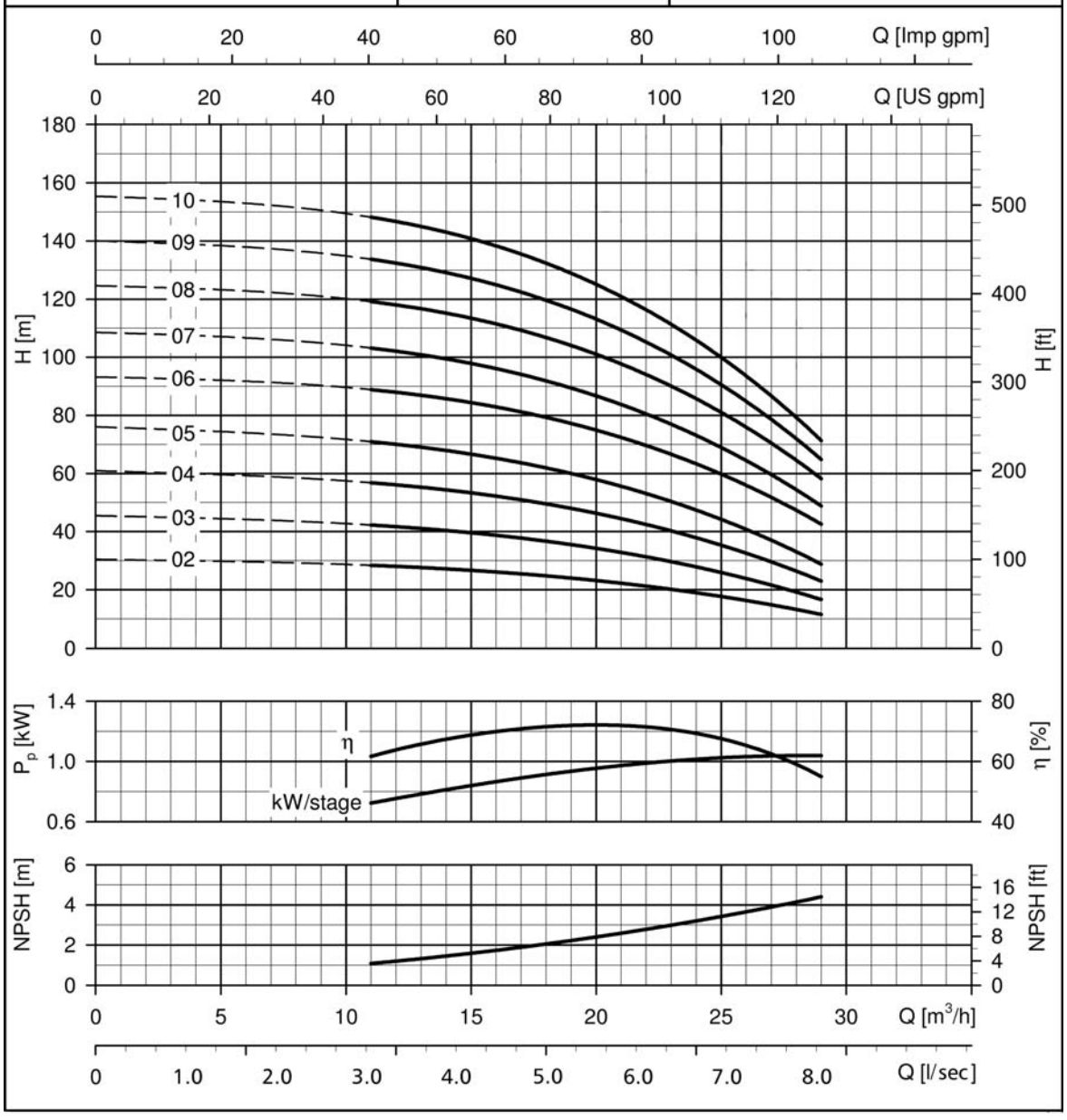

These performances are valid for liquids with density 1000 kg/m³ and kinematic viscosity 1 mm²/s.
Booster Sets which are above 16bar pressure rating are available on request.
Performance curves based on a single pump running, set losses are not included

33SV SERIES, GHV CURVES
OPERATING CHARACTERISTICS AT 50 Hz, 2 POLES

33SV	~ 2900 [rpm]	ISO 9906:2012 - Grade 3B

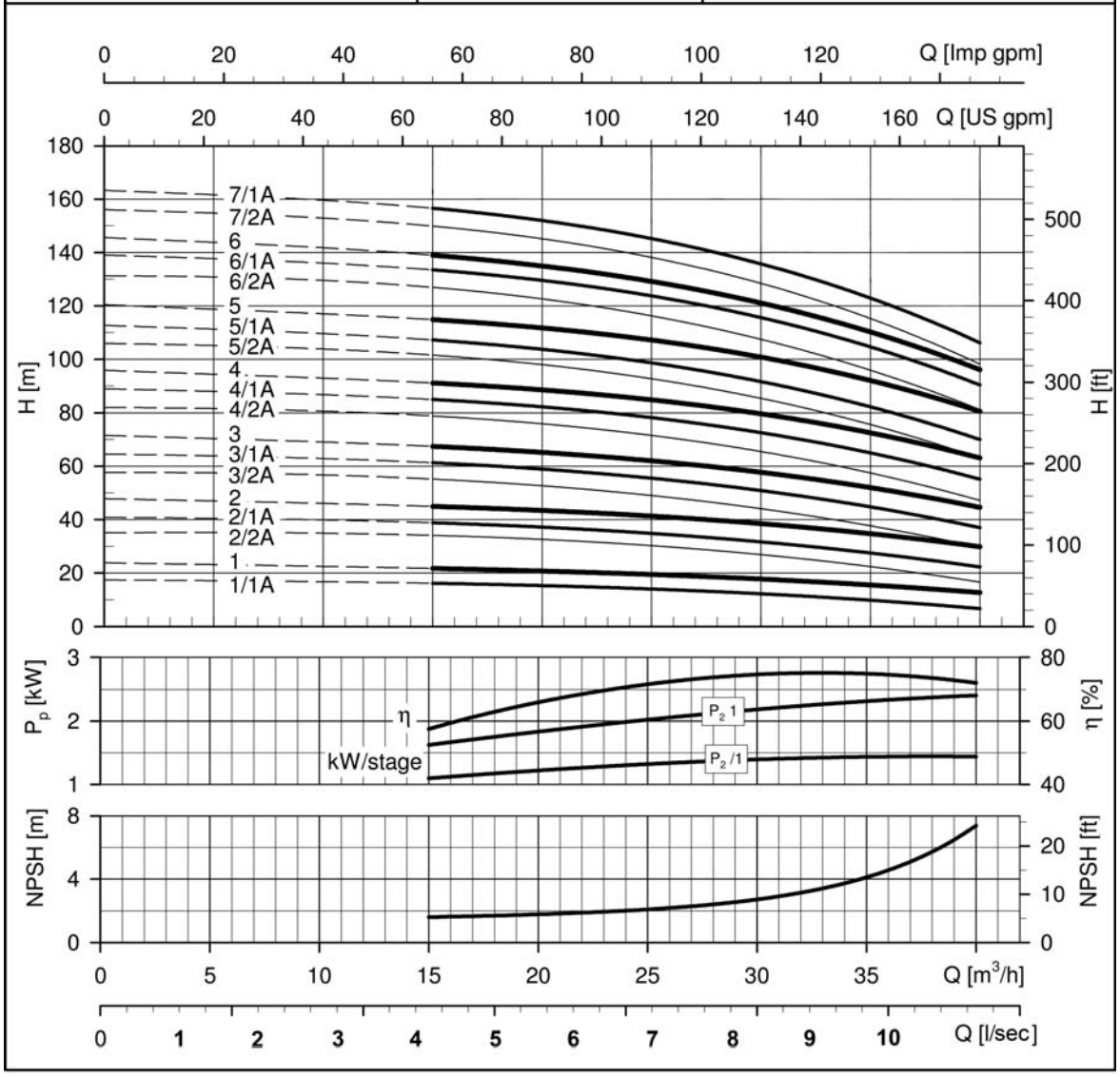

These performances are valid for liquids with density 1.0 kg/dm³ and kinematic viscosity 1 mm²/s.
Booster Sets which are above 16bar pressure rating are available on request.
Performance curves based on a single pump running, set losses are not included

46SV SERIES, GHV CURVES
OPERATING CHARACTERISTICS AT 50 Hz, 2 POLES

46SV	~ 2900 [rpm]	ISO 9906:2012 - Grade 3B

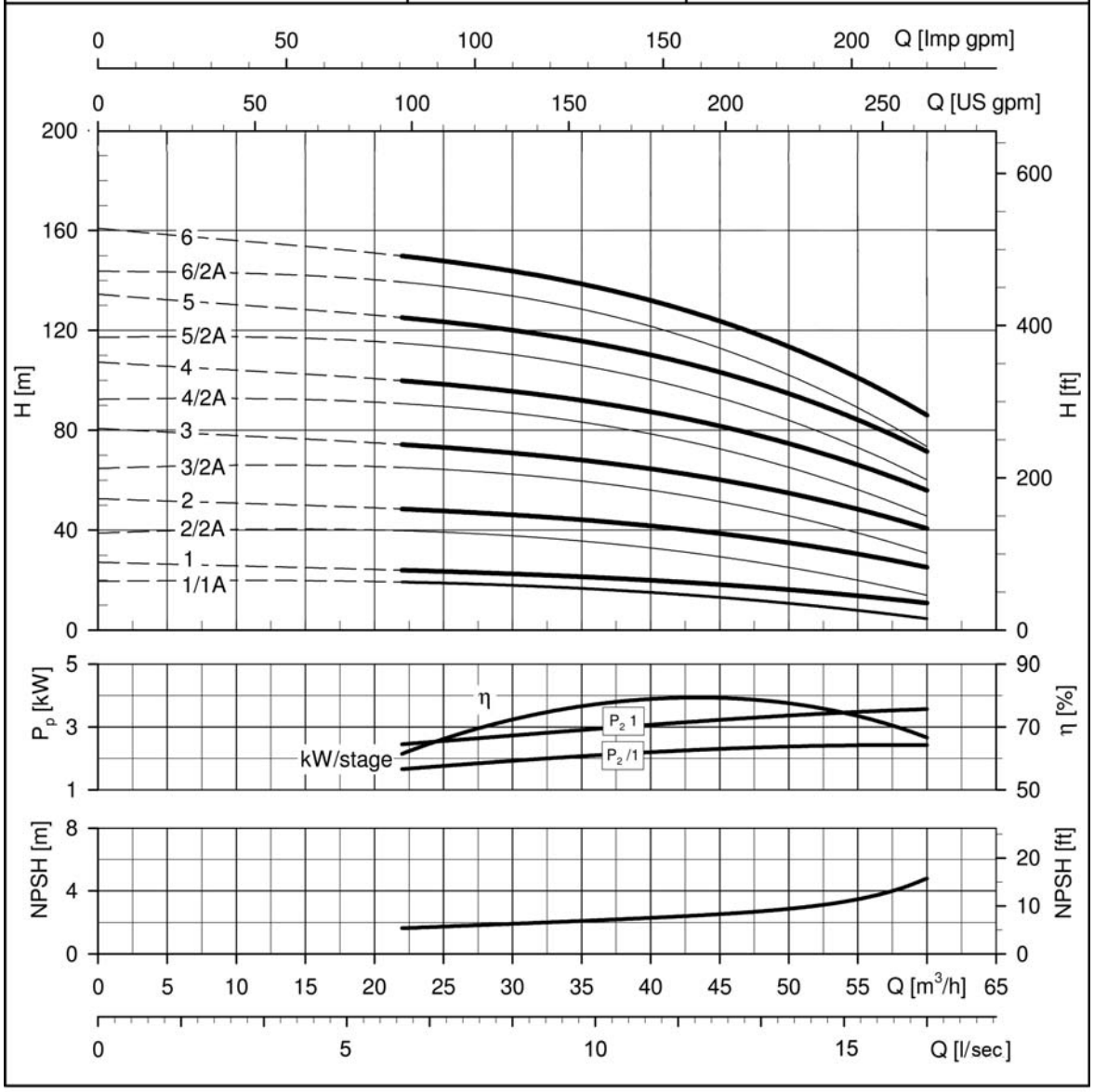

These performances are valid for liquids with density 1.0 kg/dm³ and kinematic viscosity 1 mm²/s.
Booster Sets which are above 16bar pressure rating are available on request.
Performance curves based on a single pump running, set losses are not included

66SV SERIES, GHV CURVES
OPERATING CHARACTERISTICS AT 50 Hz, 2 POLES

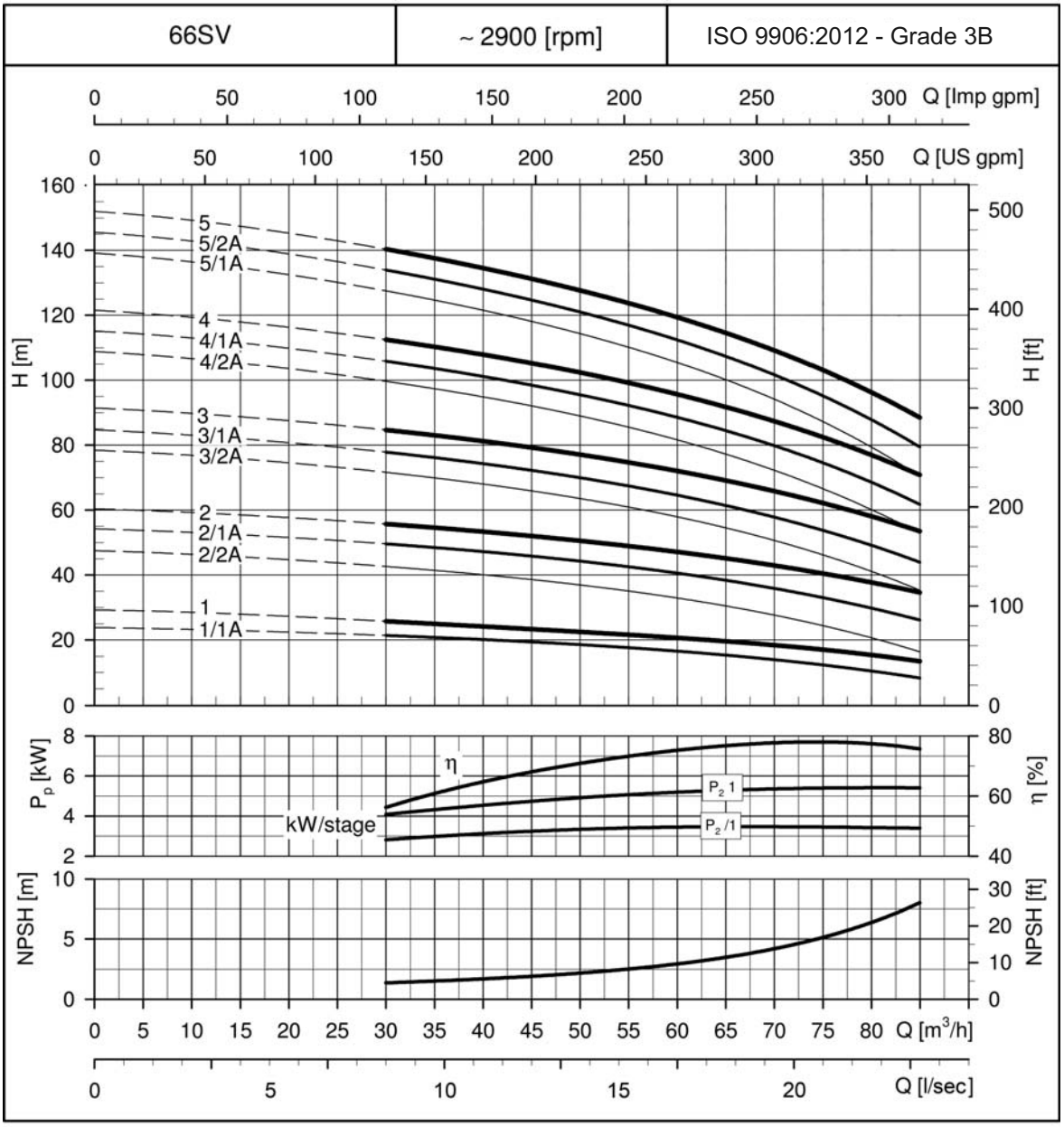

These performances are valid for liquids with density equal to 1 kg/dm³ and kinematic viscosity 1 mm²/s.
Booster Sets which are above 16bar pressure rating are available on request.
Performance curves based on a single pump running, set losses are not included

92SV SERIES, GHV CURVES
OPERATING CHARACTERISTICS AT 50 Hz, 2 POLES

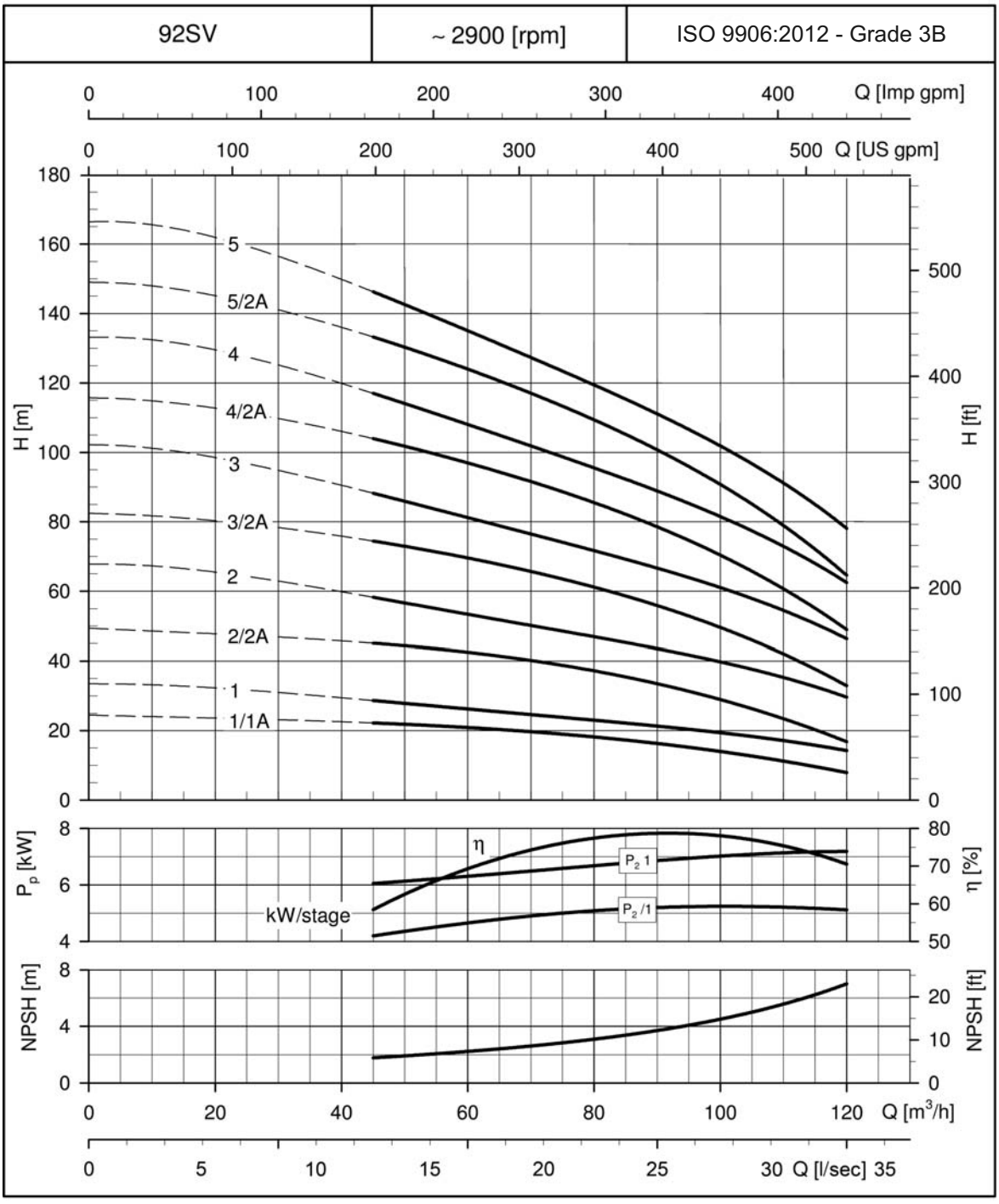

These performances are valid for liquids with density 1 kg/dm³ and kinematic viscosity 1 mm²/s.
Booster Sets which are above 16bar pressure rating are available on request.
Performance curves based on a single pump running, set losses are not included

125SV SERIES, GHV CURVES
OPERATING CHARACTERISTICS AT 50 Hz, 2 POLES

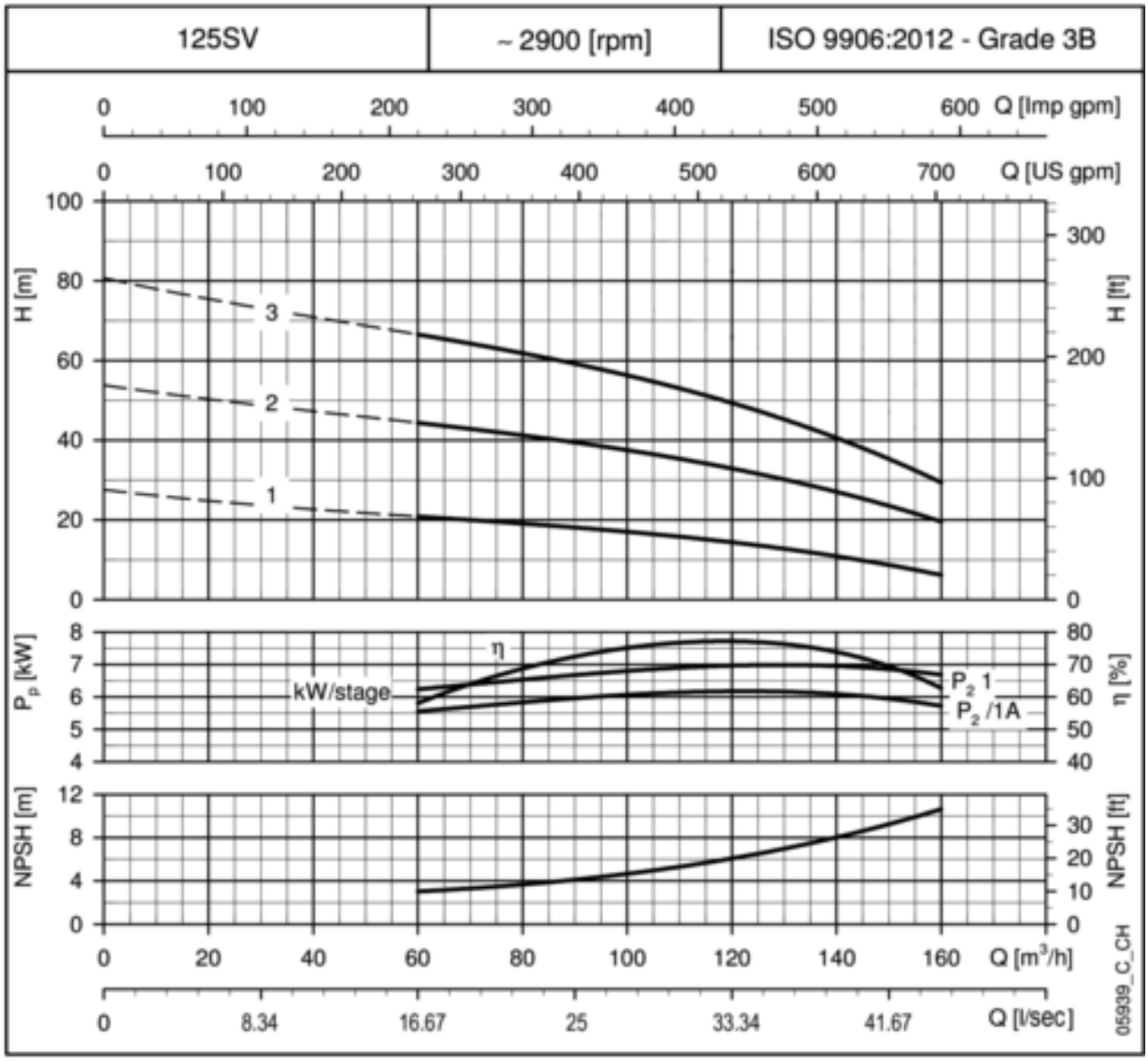

These performances are valid for liquids with density 1000 kg/m³ and kinematic viscosity 1 mm²/s.
Booster Sets which are above 16bar pressure rating are available on request.
Performance curves based on a single pump running, set losses are not included

RESVARI
RESIDENTIAL VARIABLE SPEED BOOSTER SET

- Integral water storage with Class AB air gap I.E. Category 5
- Duties up to 1 l/s.
- Head up to 4.2 Bar.
- Actual usable tank capacity 180 litres.
- Adjustable feet for easy levelling.
- Internal vessel for smooth pump control and minimising the number of pump starts.
- Input/output isolation valves for ease of maintenance and commissioning.
- Low water protection.
- Application, Domestic dwellings.

Boosted water supply

An ever increasing demand on our water supply lines can sometimes lead to poor performance at the point of use due to low pressures, especially at peak demand periods. In addition to this, water supply companies in some parts of the country are reducing pressures to avoid excessive water loss through leaks

A Lowara professionally sized and installed booster set will provide a perfect solution to overcoming low water pressures around the home.
Installing a Lowara booster set will ensure that water pressures for both hot and cold supplies will be able to cover the most demanding requirements.

The Resvari (variable speed) booster set will give energy savings over the life time of the pump and provide a very stable pressure platform irrespective of the number of outlets being used simultaneously.

Assist unit

Where a larger water storage volume is required an assist unit can be added to give an additional 180 litres of water storage.

SELECTION DATA

Number of occupants	Maximum expected Flow	Maximum pressure	Minimum storage requirement	Standard booster set	Booster set + assist unit
1	0.4 l/sec	4.2 bar	105lt	•	
2	0.5 l/sec	4.0 bar	130lt	•	
3	0.6 l/sec	3.8bar	150lt	•	
4	0.7 l/sec	3.6 bar	200lt*	•	
5	0.8 l/sec	3.2 bar	250lt		•
6	1 l/sec	2.7 bar	300lt		•

POWER SUPPLY
230-1-50
Protection IP65

PUMP TYPE
Scuba SC205C
230-1-50
Input current 4.37A

SYSTEM CONNECTIONS
Mains incoming water supply: 15mm
Overflow: 22mm
System connection: 22mm

MATERIALS

Cabinet:	Powder coated steel
Water tank:	Polyethylene
Ball valve 1/2":	Brass to BS1212 part 2
Pump:	SC205C AISI 304 Stainless steel
Pipework:	Copper
Compression fittings:	Brass
Isolation valves:	Brass
Plastic fittings:	Polypropylene
Tank insulation:	Polyisocyanurate (PIR)
Anti-spin bracket:	AISI 304 Stainless steel
8 Litre Vessel:	Powder coated steel with Butyl membrane

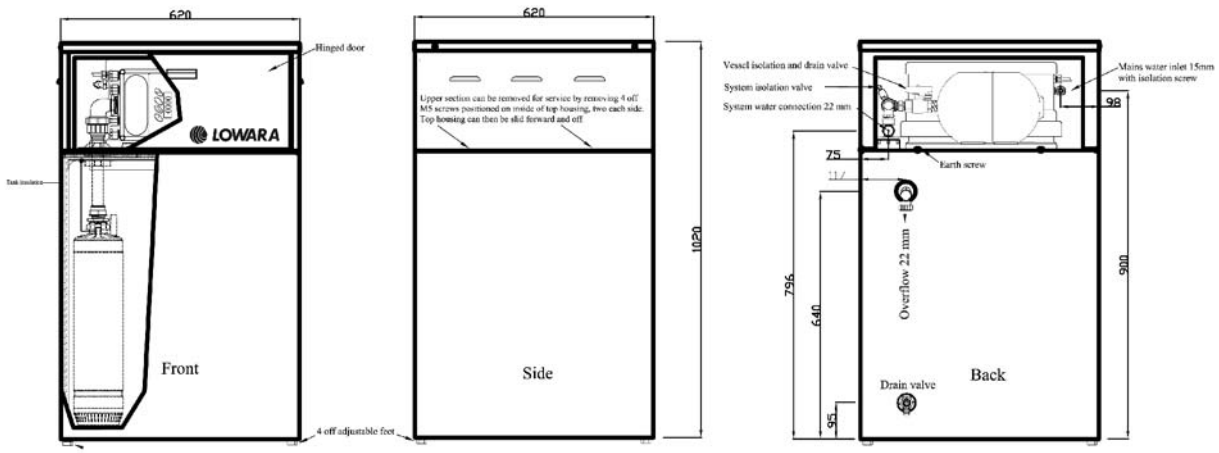

SCUBA SC205
OPERATING CHARACTERISTICS AT 50 Hz, 2 POLES

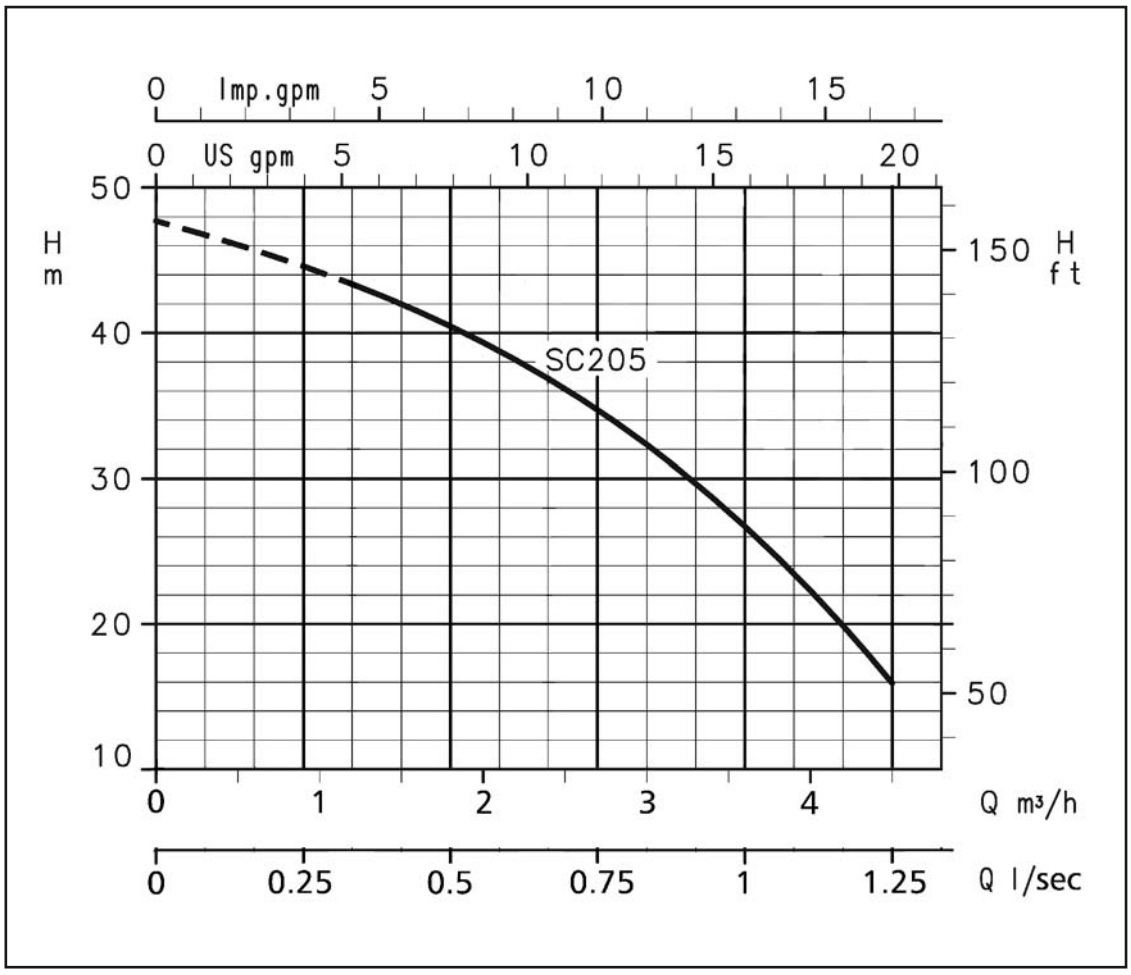

These performances are valid for liquids with density 1 kg/dm³ and kinematic viscosity 1 mm²/s.
Performance curves based on a single pump running, set losses are not included.

CATEGORY 5 BREAK TANK BOOSTER SETS VARITANK VARIABLE

Lowara Varitank pump booster sets complete with pre-insulated integral break tanks suitable for boosting potable cold water.
These sets can be fitted with either Teknospeed or Hydrovar energy saving variable speed drives.

All standard break tank sets include:
- Category 5 type AB air gap.
- Low water level float switch.
- 22mm equilibrium ball valve and float (15mm with 55 and 91 litre tanks).
- 32mm overflow (22 with 55 and 91 litre tanks).
- 22mm warning pipe fitted on 1000 litre tanks and above.
- Special booster sets and larger performance booster sets can be built to suit specific requirements.

e-HM/CEA and e-SV versions available.

SPECIFICATIONS
Teknospeed booster sets.
Power supply: 230V-1-50 0.3 – 1.1Kw
Delivery: up to 12m³/h
Working heads: up to 8 bar
Tank range base mounted: 55lt-1000lt
Tank range frame mounted: 250lt-3000lt

GHV booster sets
Power supply:
230-1-50 0.7-2.2Kw
400-3-50 1.1- 22Kw
Delivery: up to 36m³/h
working heads: up to 14 bar
Tank range base mounted: 250lt-1000lt
Tank range frame mounted: 250lt-3000lt

MATERIALS
On/off valves: Nickel plated brass
Non-return valves: Brass
Pressure transmitter: AISI316
Base: Galvanised Steel
Base: R version Painted Steel
Tank suction connection: Copper or PVC
Tanks 55lt & 91lt: Polyethylene
Tanks 250lt-3000lt: One piece GRP
Tank base and frame: Painted Steel

APPLICATIONS
- Domestic, commercial, industrial and building applications.

WATER STORAGE
Storing water has two main purposes,
1. To provide for an interruption in supply
2. To provide sufficient volume to cover peak demands.

Design codes recommend that storage is provided to cover the interruption of an incoming mains supply, in order to maintain a water supply to the building.
Water supply companies are empowered to insist on specific terms including the volume or period of storage, within the terms of their supply agreement with a consumer, however many water supply companies only recommend that storage be provided in accordance with BS6700, placing the responsibility and decision firmly on the consumer.
The table on the next page provides guidance on typical usage within a building over a 24 hour period.
The table also provides storage volume based on the % of daily demand when the water supply company or client has not dictated the period of cover.

Consideration should also be given to ensure that the break tank has sufficient volume to cover 50% of the design duty for a minimum duration of 10 minutes.

Varitank (base)

Varitank (frame)

TYPICAL USAGE AND STORAGE VOLUME BASED ON THE % OF DAILY DEMAND

Daily water demand (Litres)						24hr storage % of daily demand
Hospitals	District general	Surgical/ ward	Medical ward	Paediatric ward	Geriatric ward	
Storage per bed	600lt	250lt	220lt	300lt	140lt	50%
Nursing homes	Elderly care	Elderly sheltered				
Storage per bed	135lt	120lt				50%
Dwellings	1 bedroom	2 bedrooms	3 + bed-rooms			
Storage per bedroom	210lt	130lt	100lt			50%
Hotels/Hostels	Budget	Travel inn/lodge	4/5 star luxury			
Storage per bedroom	135lt	150lt	200lt			50%
Ofices/Shops/ Factory	With canteen	Without canteen				
Storage per person	45lt	40lt				50%
Libery, Musium, Art galleries	General					
Storage per person	6lt					25%
Cinema, Theatre	General					
Storage per person	3lt					25%
Bars, Nightclub	General					
Storage per person	4lt					25%
Sports facilities	Sports hall	Swimming pool	Field sports	All weather pitch		
Storage per person	35lt	20lt	35lt	35lt		25%
Schools, Colleges, Universities	Nursery/ Primary	Secondary/ college	Boarding			
Storage per pupil	15lt	20lt	90lt			50%

Frame tank sets fitted with e-SV pumps

All the following frame sets above 250lt can be fitted with eSV pumps but the frame heights will increase by 300-500mm.

SINGLE PUMP CONTROL PANEL WITH BASIC CONNECTION DETAILS

Varitank GTKS10 single phase booster set 1.1Kw

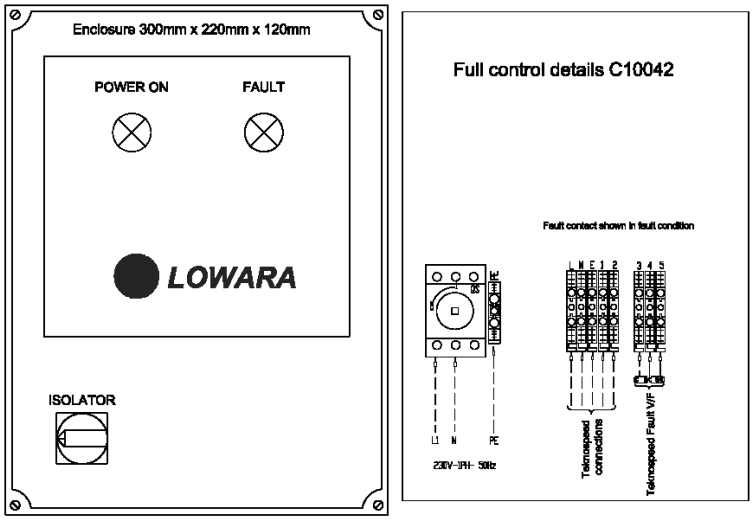

Varitank GHV10 single phase booster set 1.5-2.2Kw

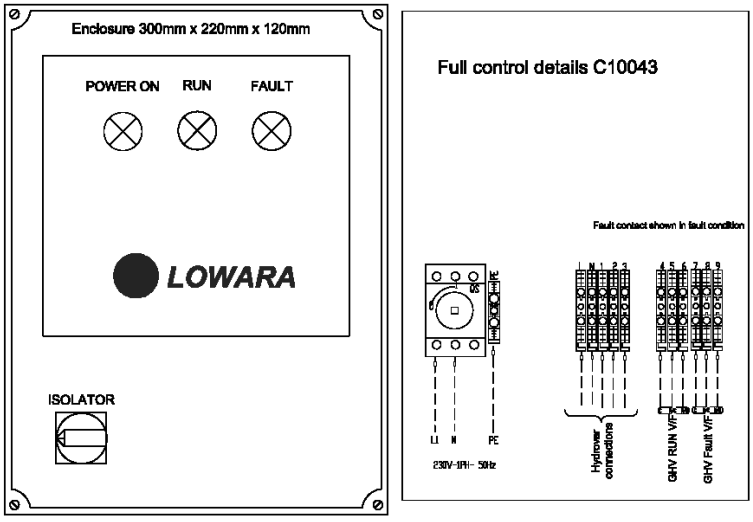

Varitank GHV10 three phase booster set 2.2-4.0Kw

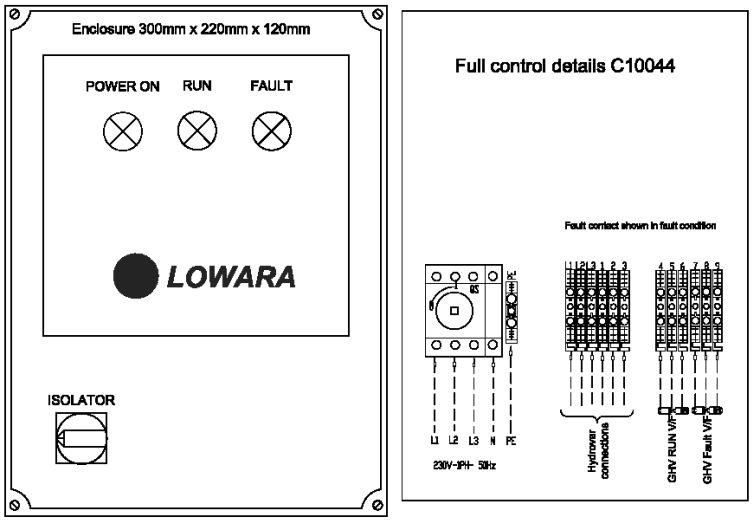

VARITANK BASE MOUNTED GTKS SERIES DIMENSIONS
GTKS10 3HM04-05 WITH 55 LITRE BREAK TANK

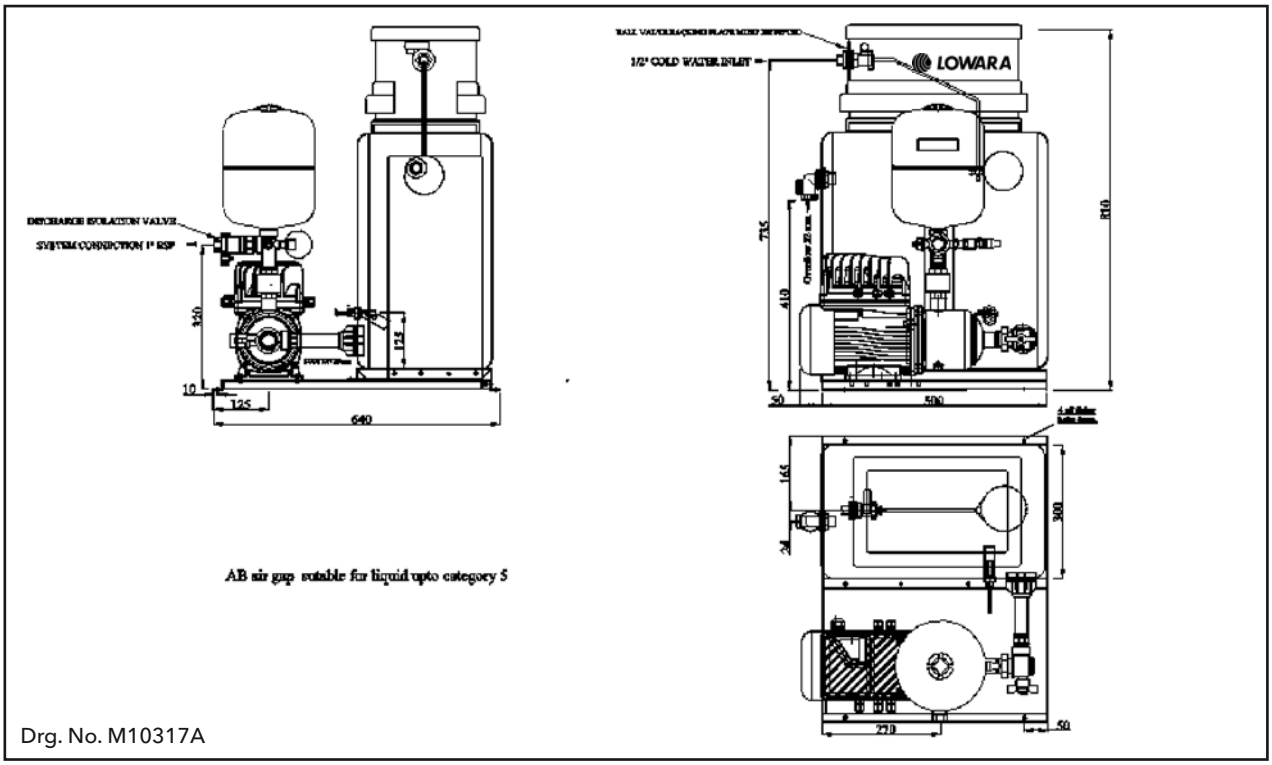

Drg. No. M10317A

GTKS10 3HM04-05 WITH 91 LITRE BREAK TANK

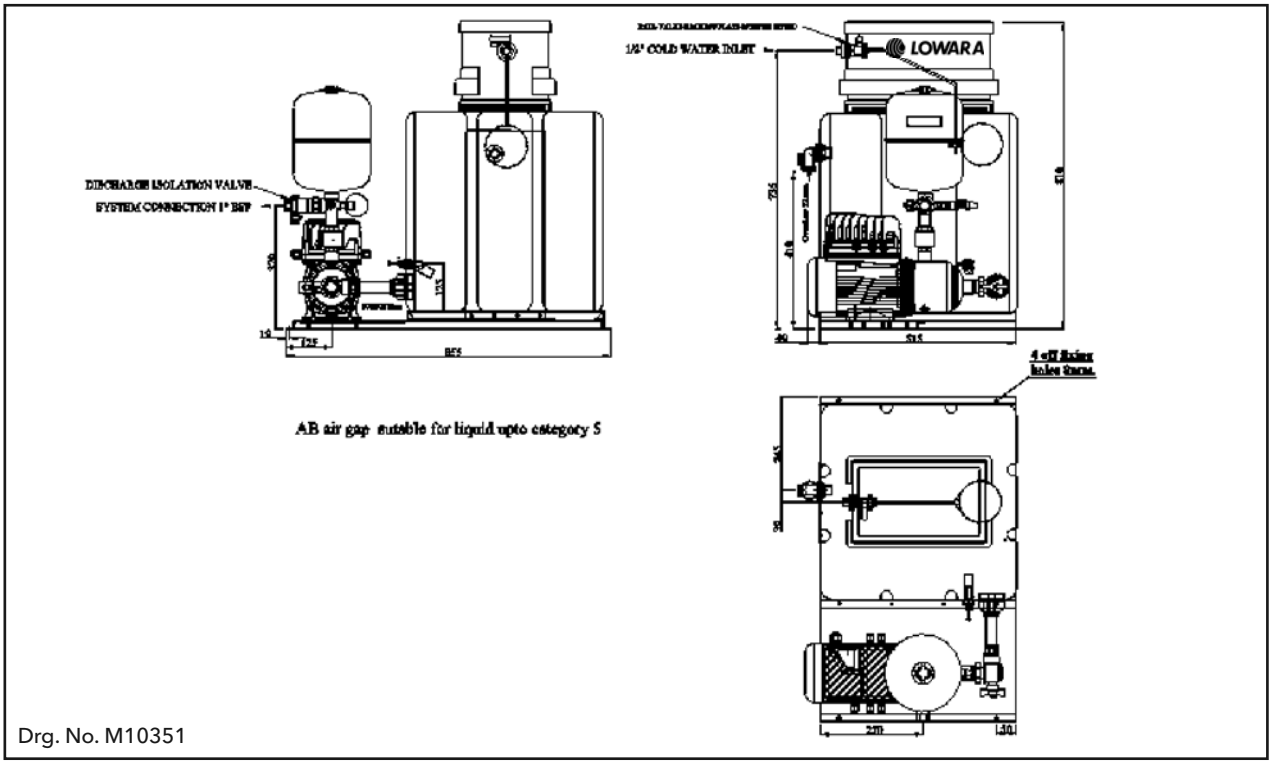

Drg. No. M10351

VARITANK BASE MOUNTED GTKS/GHV SERIES DIMENSIONS
GTKS10 1-3-5HM02-08 WITH 250 LITRE BREAK TANK

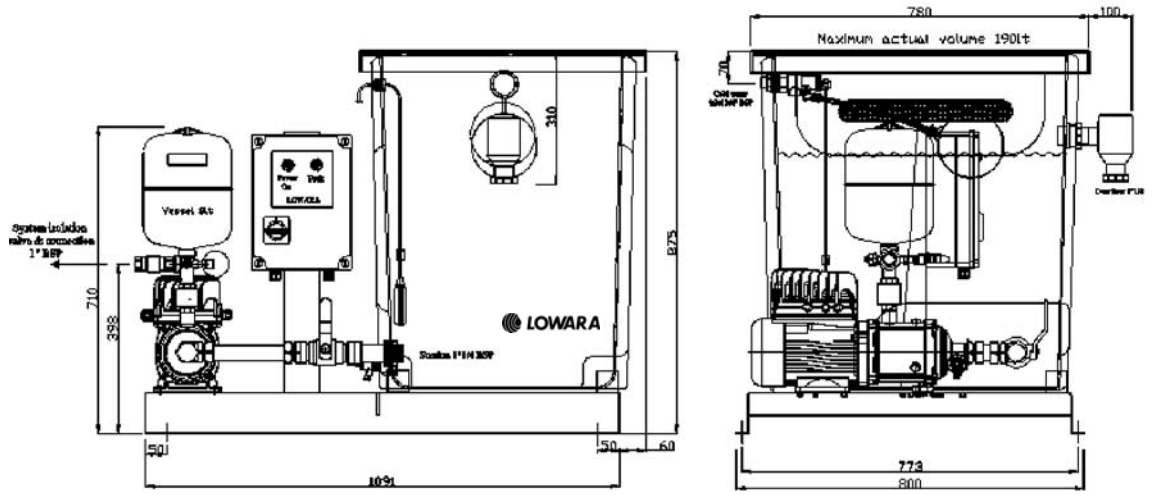

Drg. No. M10328

GTKS10/1-3SV WITH 250 LITRE BREAK TANK

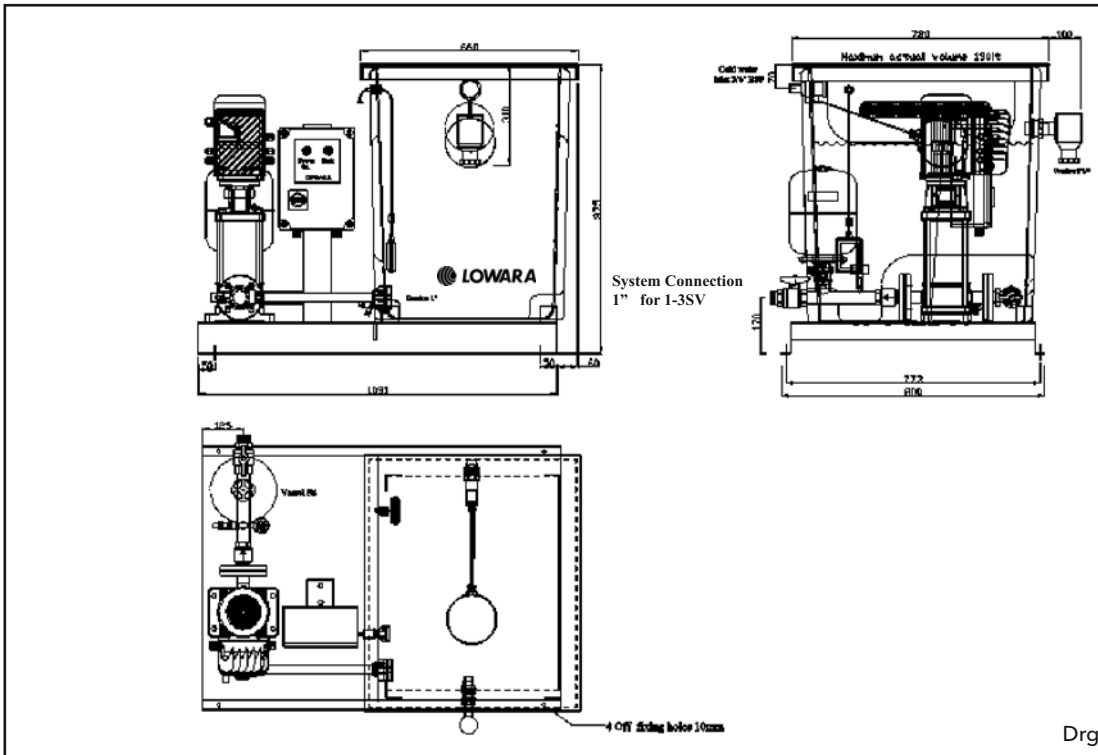

Drg. No. M10354

VARITANK BASE MOUNTED GTKS/GHV SERIES DIMENSIONS
GTKS10 5SV WITH 250 LITRE BREAK TANK

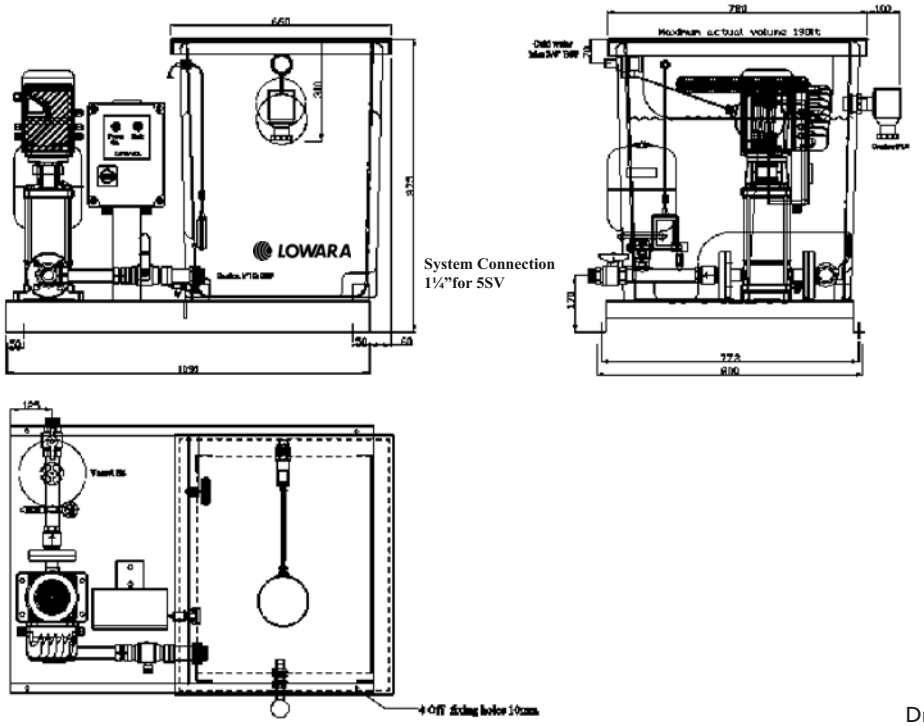

Drg. No. M10356

GTKS10/1HM UP TO 16 STAGE, 3HM UP TO 13 STAGE
GTKS20/1-3-5HM UP TO 8 STAGE WITH 250 LITRE BREAK TANK

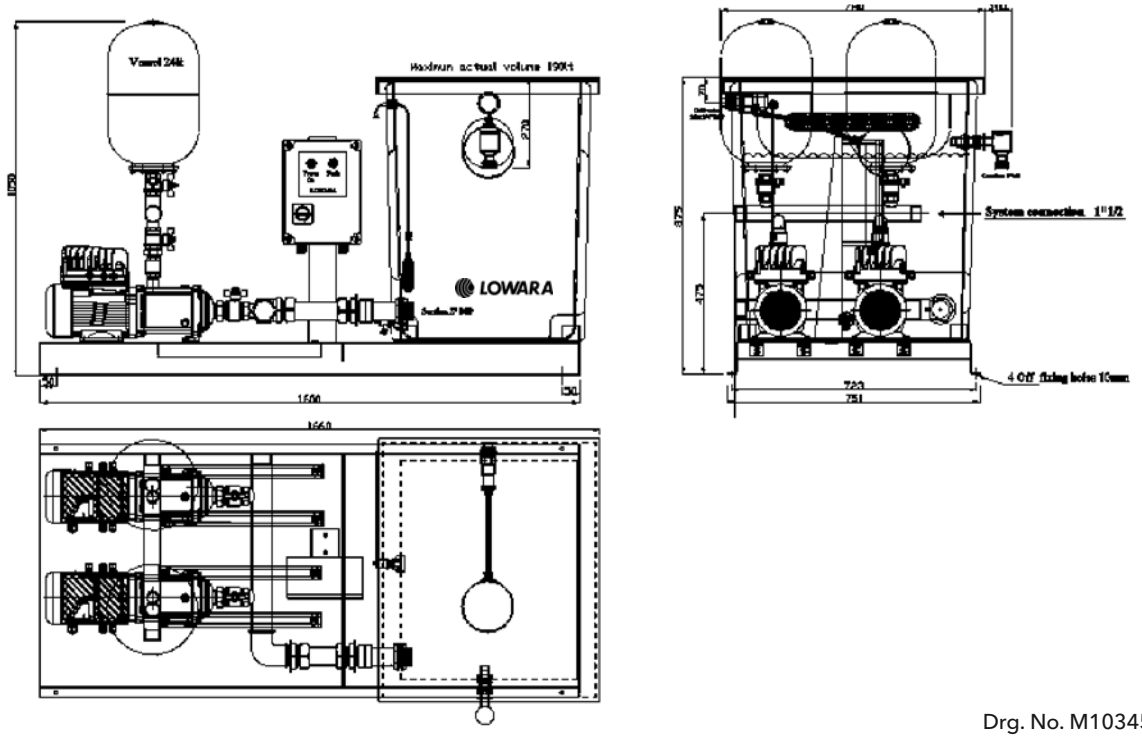

Drg. No. M10345

VARITANK BASE MOUNTED GTKS/GHV SERIES DIMENSIONS GTKS20 OR GHV20/3-5SV WITH 250 LITRE BREAK TANK

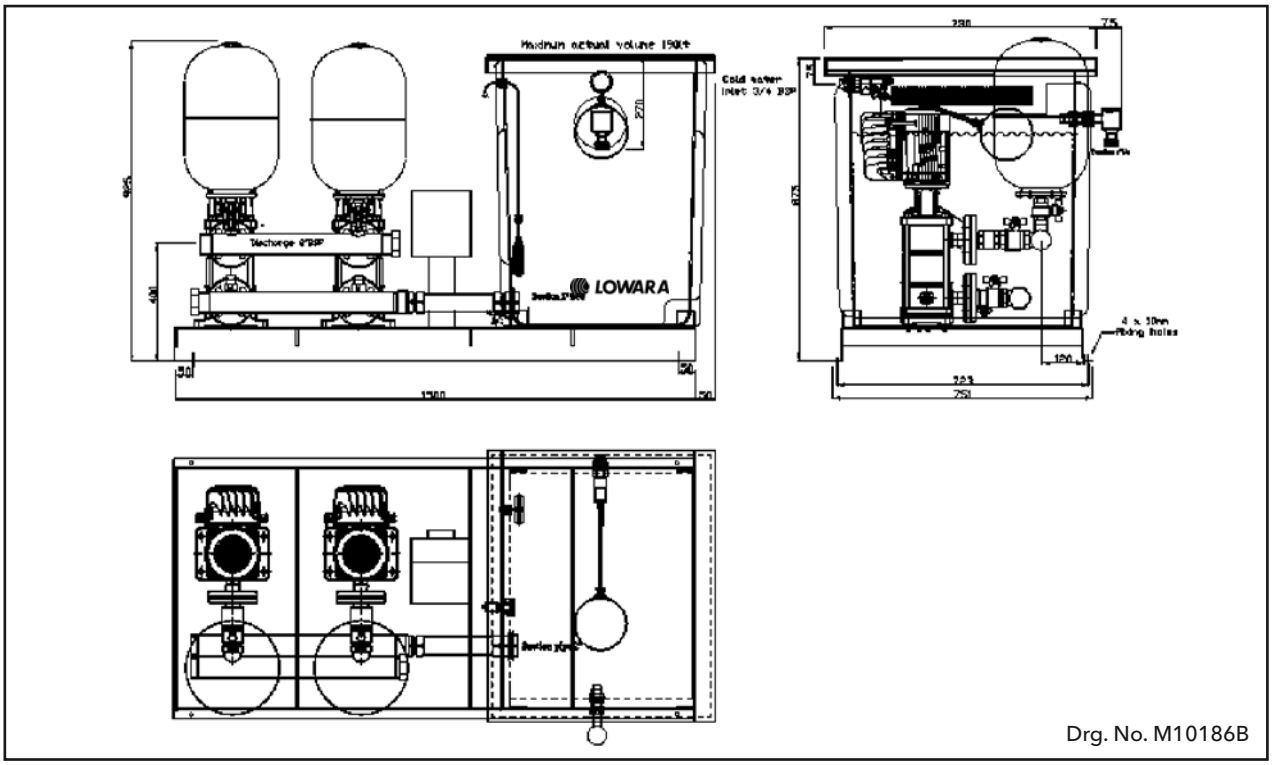

GTKS10/1-3-5HM UP TO 8 STAGES OR GTKS10/1-3-5SV WITH 450 LITRE BREAK TANK

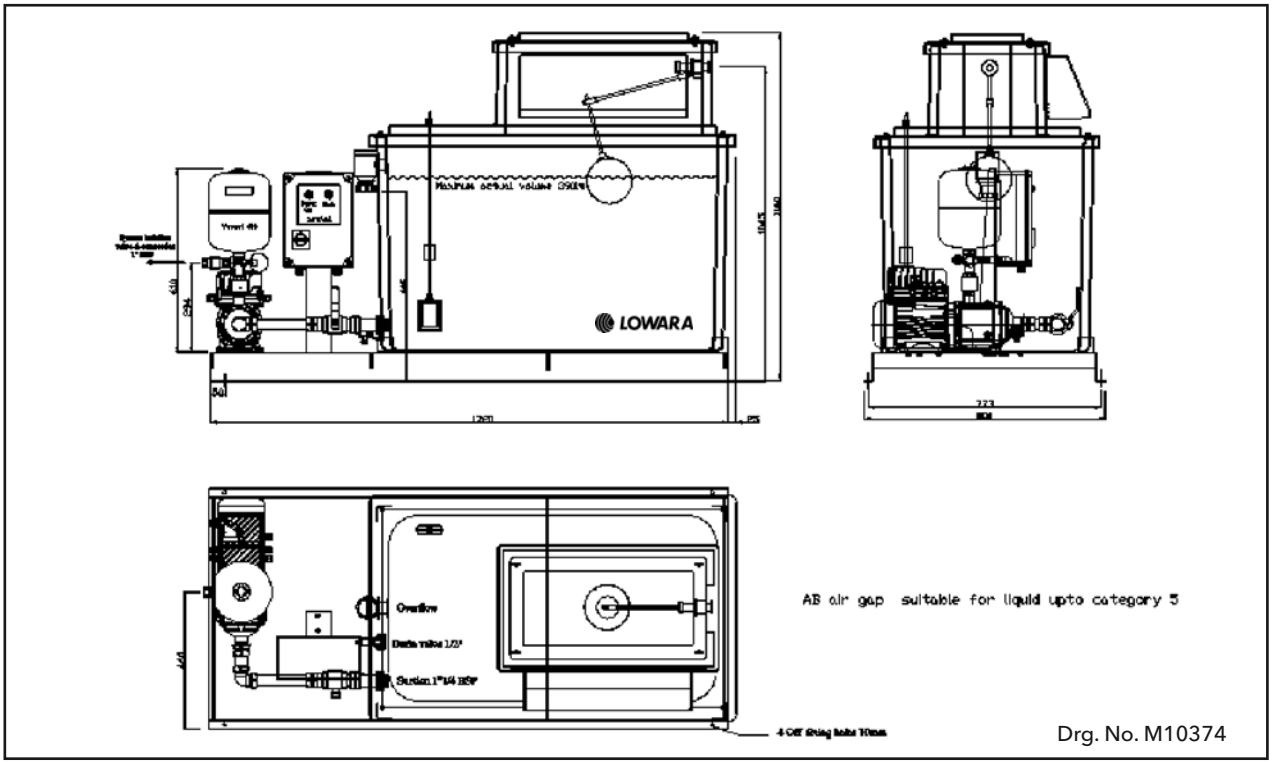

VARITANK BASE MOUNTED GTKS/GHV SERIES DIMENSIONS GTKS10/5SV WITH 450 LITRE BREAK TANK

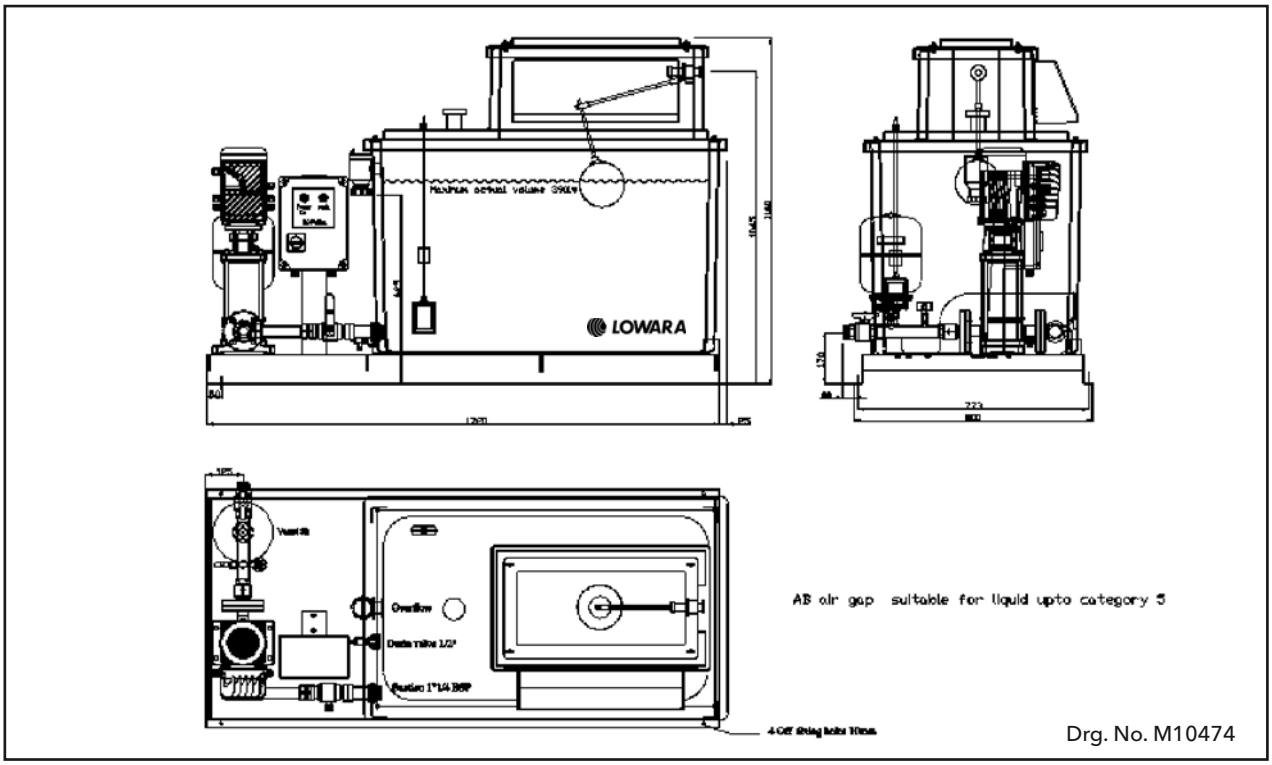

Drg. No. M10474

GTKS20 OR GHV20/1-3-5SV WITH 450 LITRE BREAK TANK

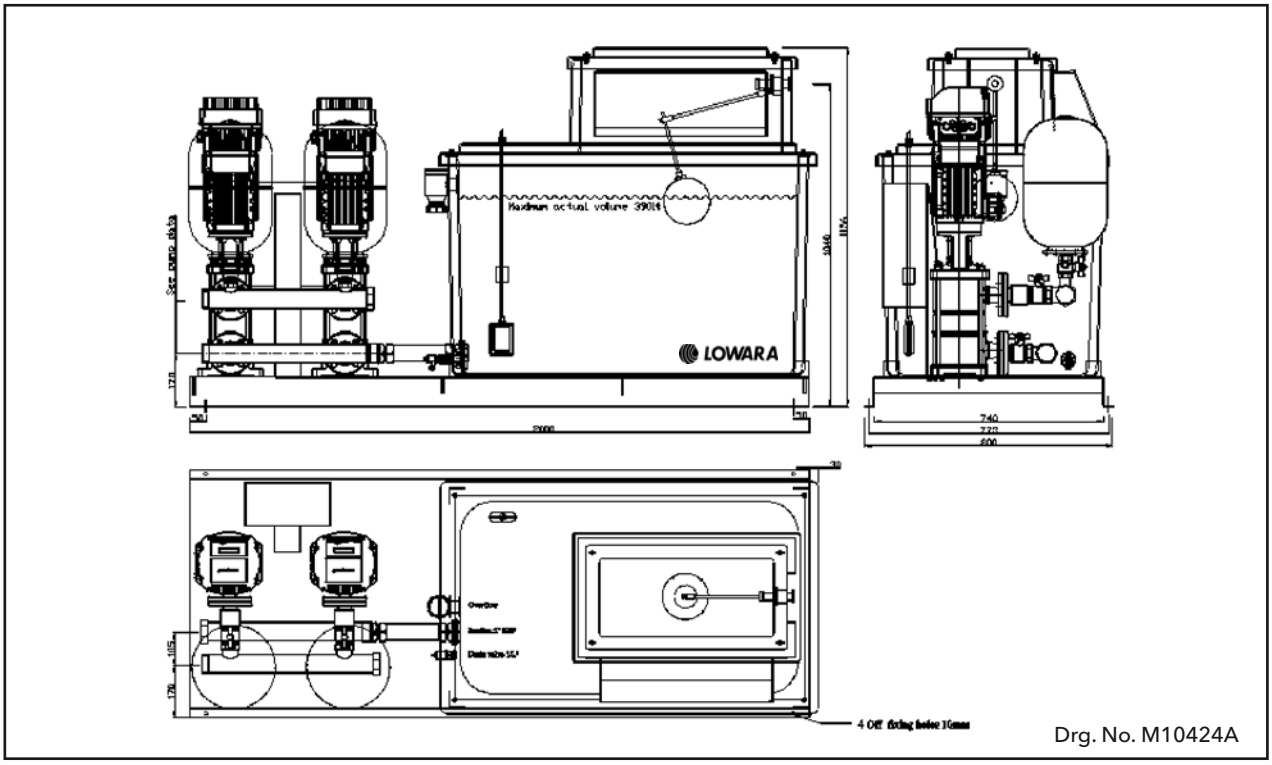

Drg. No. M10424A

VARITANK BASE MOUNTED GTKS/GHV SERIES DIMENSIONS GTKS10 OR GTKS20/1-3-5HM UP TO 8 STAGES, WITH 680 LITRE BREAK TANK

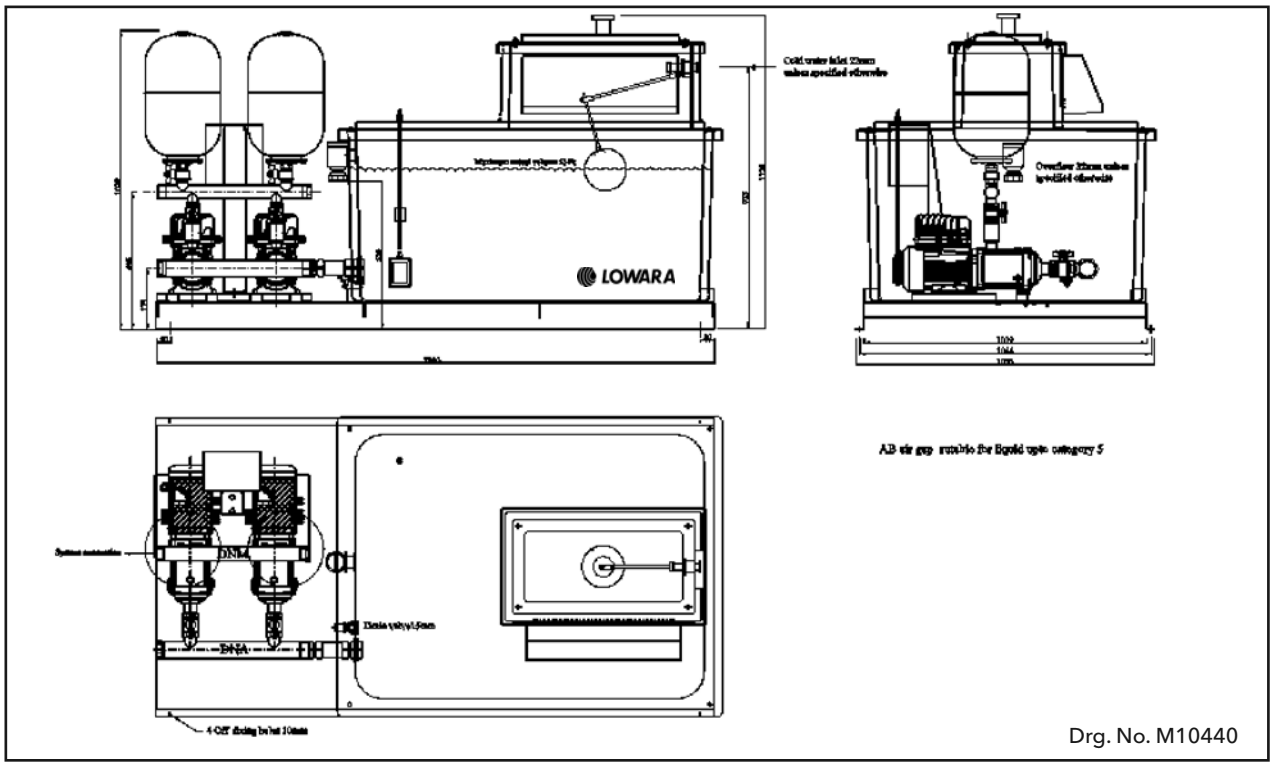

Drg. No. M10440

GTKS10/20 OR GHV10/20/1-3-5SV WITH 680 LITRE BREAK TANK

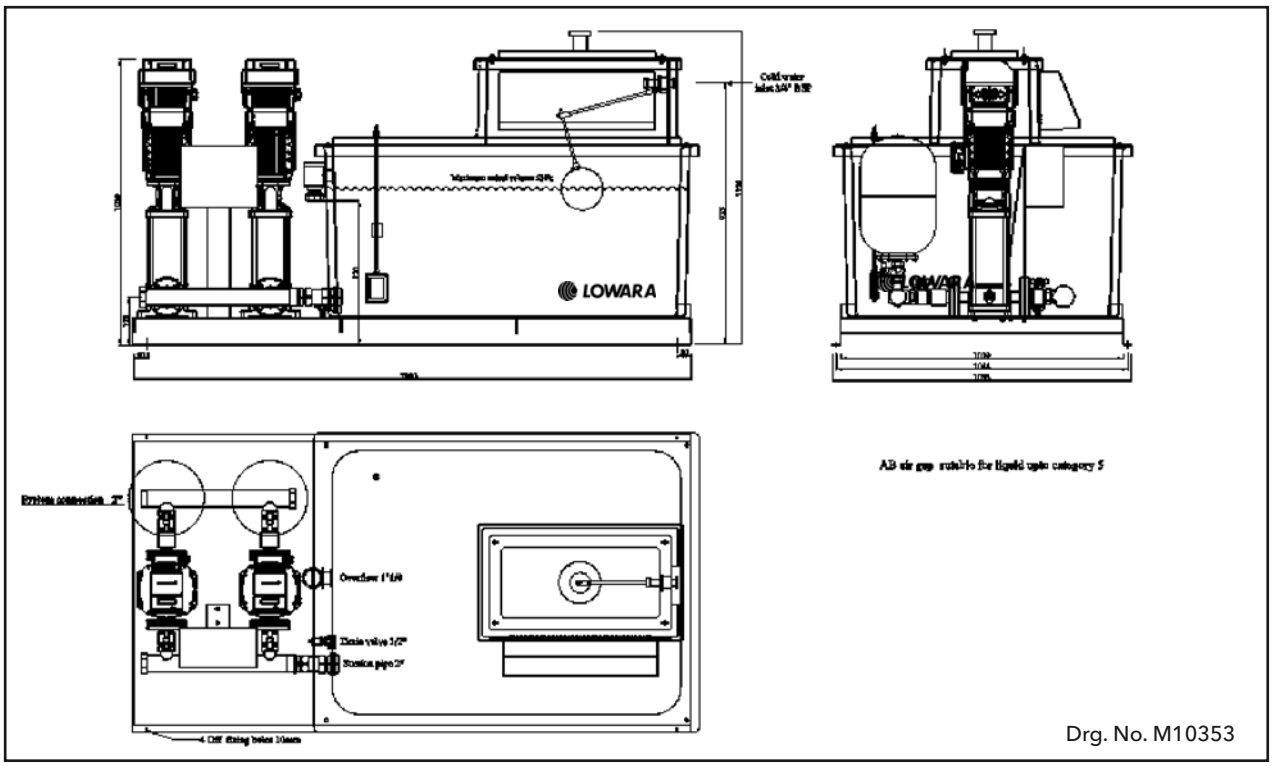

Drg. No. M10353

LOWARA
a xylem brand

VARITANK BASE MOUNTED GTKS/GHV SERIES DIMENSIONS GTKS10 OR GTKS20/1-3-5HM UPTO 8 STAGE WITH 1000 LITRE BREAK TANK

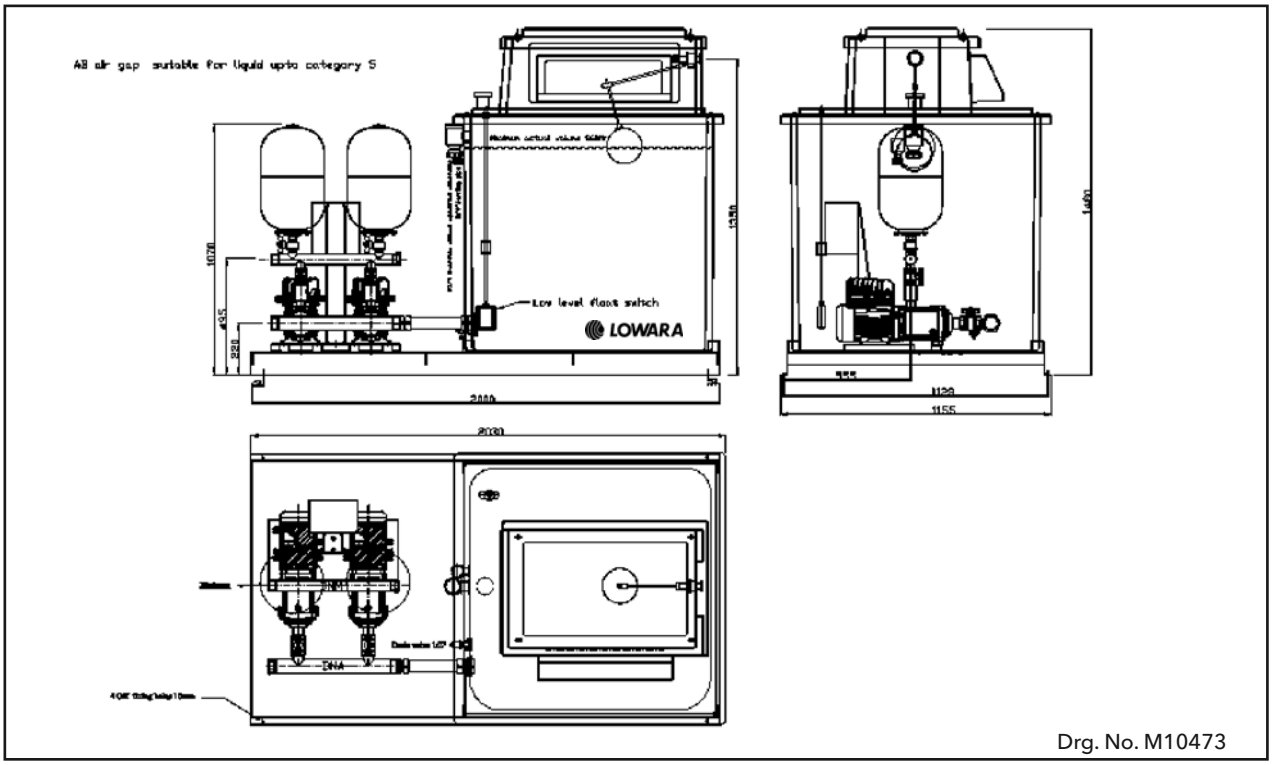

Drg. No. M10473

GTKS10/20 OR GHV 10/20/3-5SV WITH 1000 LITRE BREAK TANK

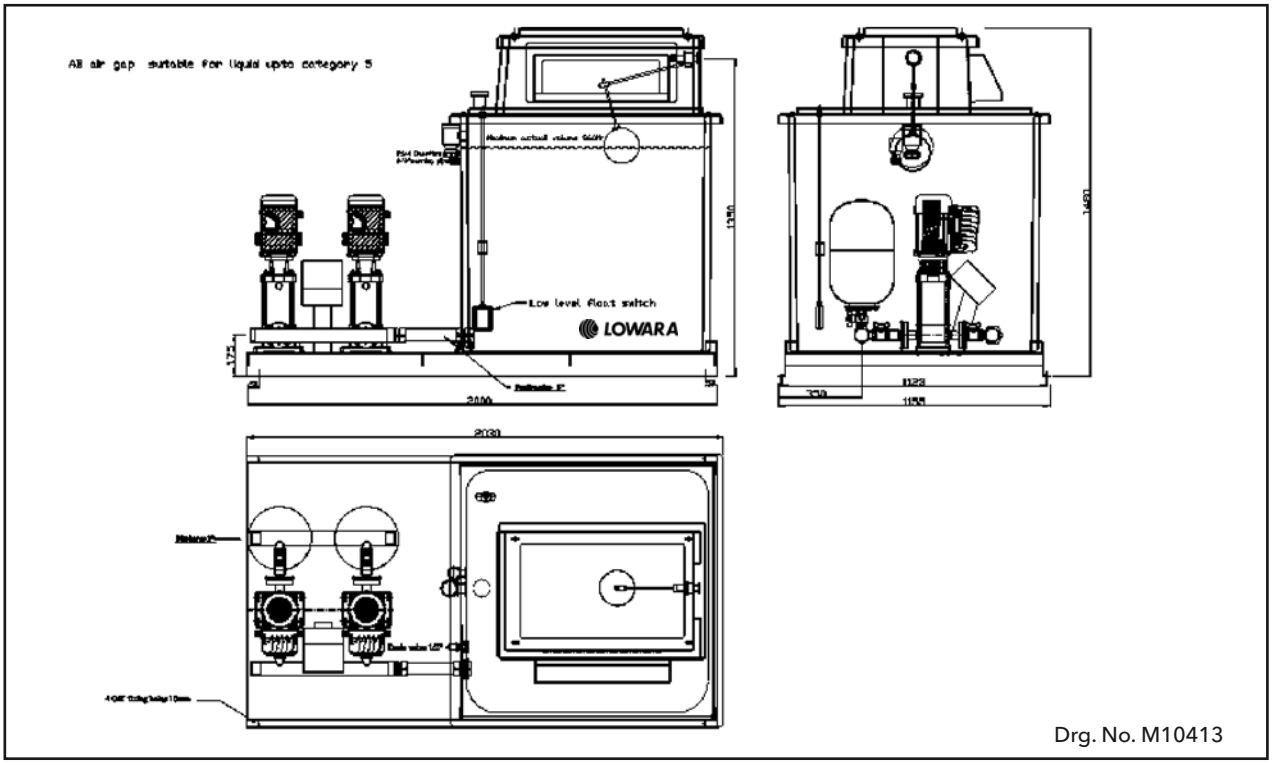

Drg. No. M10413

VARITANK FRAME MOUNTED GTKS/GHV SERIES DIMENSIONS
GTKS10/1-3HM UPTO 8 STAGE WITH 250 LITRE BREAK TANK

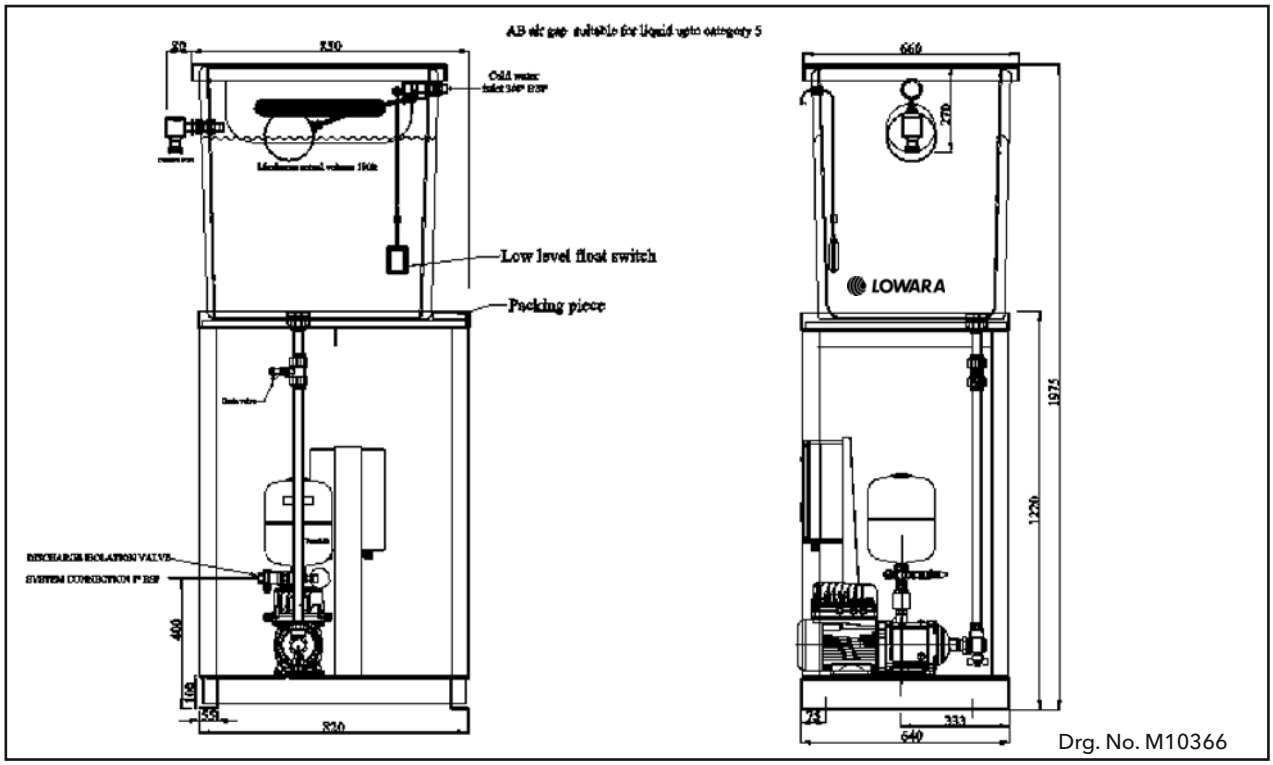

Drg. No. M10366

GTKS20/1-3HM UP TO 8 STAGE WITH 250 LITRE BREAK TANK

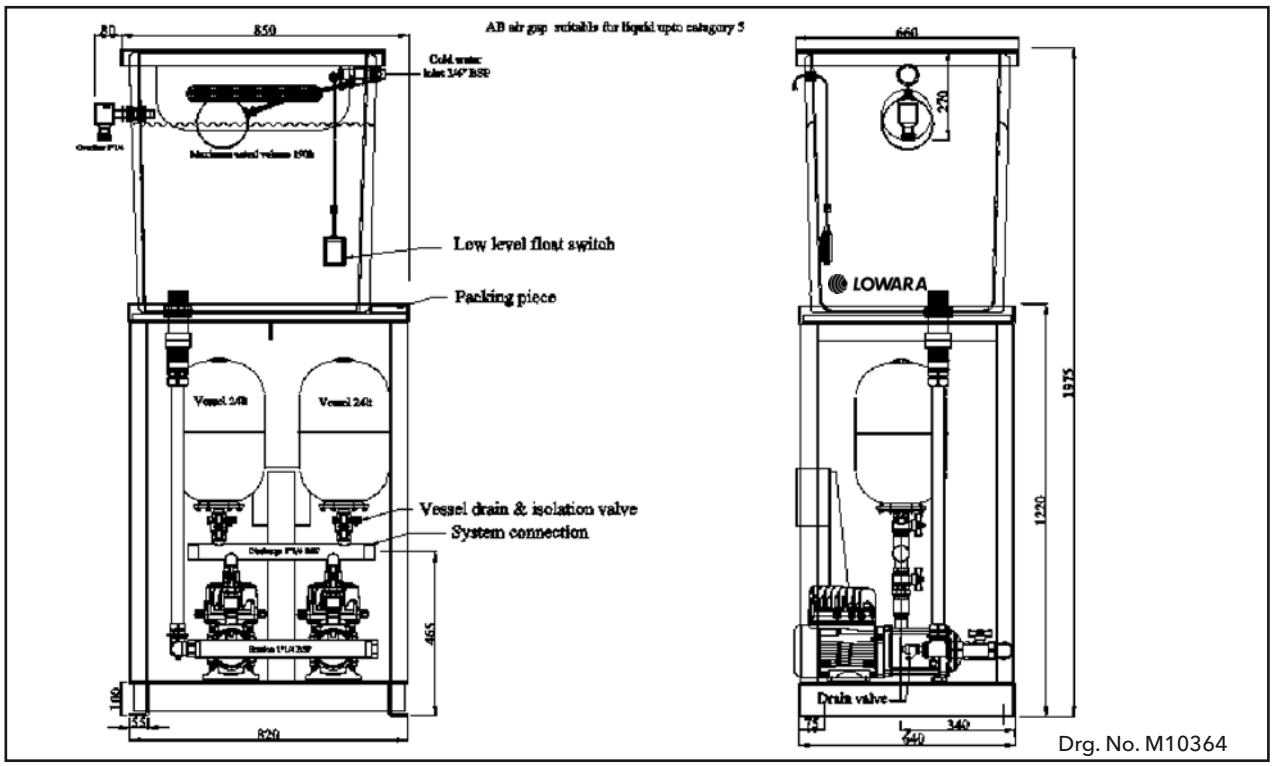

Drg. No. M10364

VARITANK FRAME MOUNTED GTKS/GHV SERIES DIMENSIONS
GTKS10/1-3-5HM OR GHV10/1-3-5HM
MAXIMUM STAGES 1HM16-3HM13-5HM11 WITH 460 LT BREAK TANK

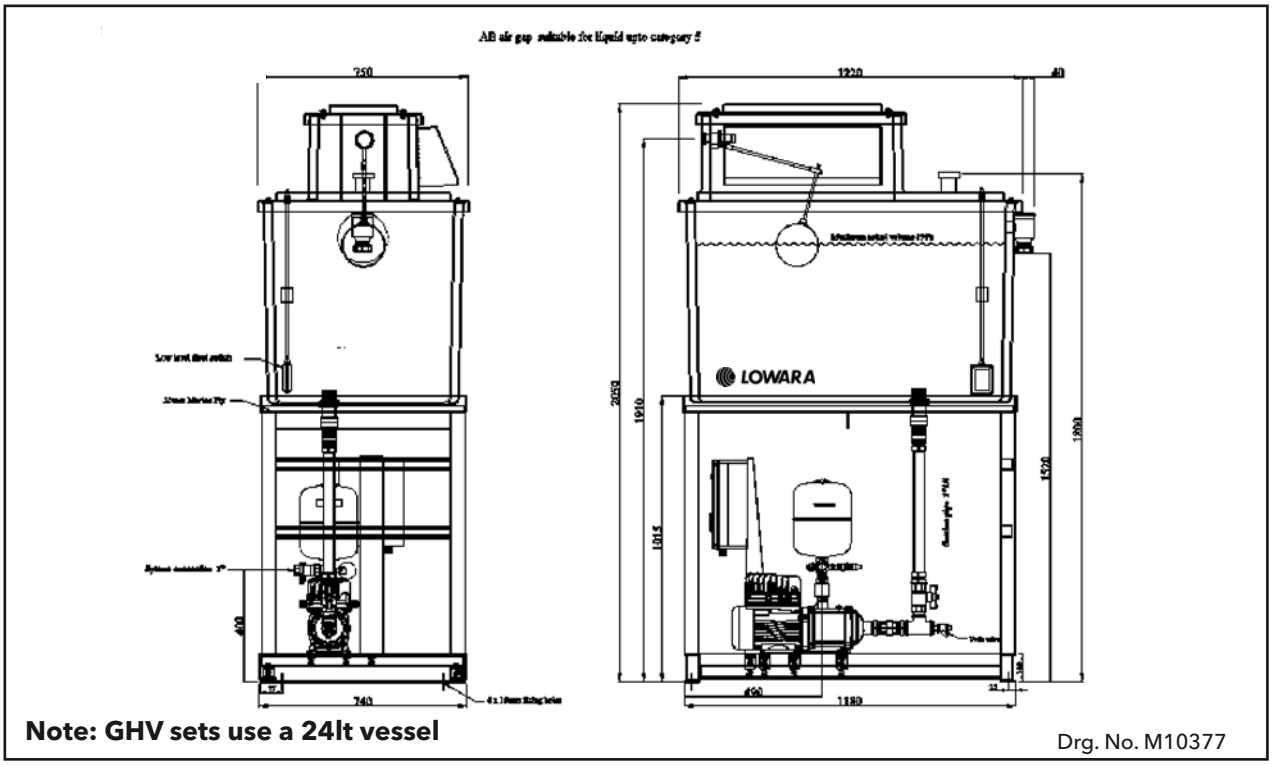

Note: GHV sets use a 24lt vessel

Drg. No. M10377

GTKS20/1-3-5HM OR GHV20/1-3-5HM
MAXIMUM STAGES 1HM16-3HM13-5HM11 WITH 460 LT BREAK TANK

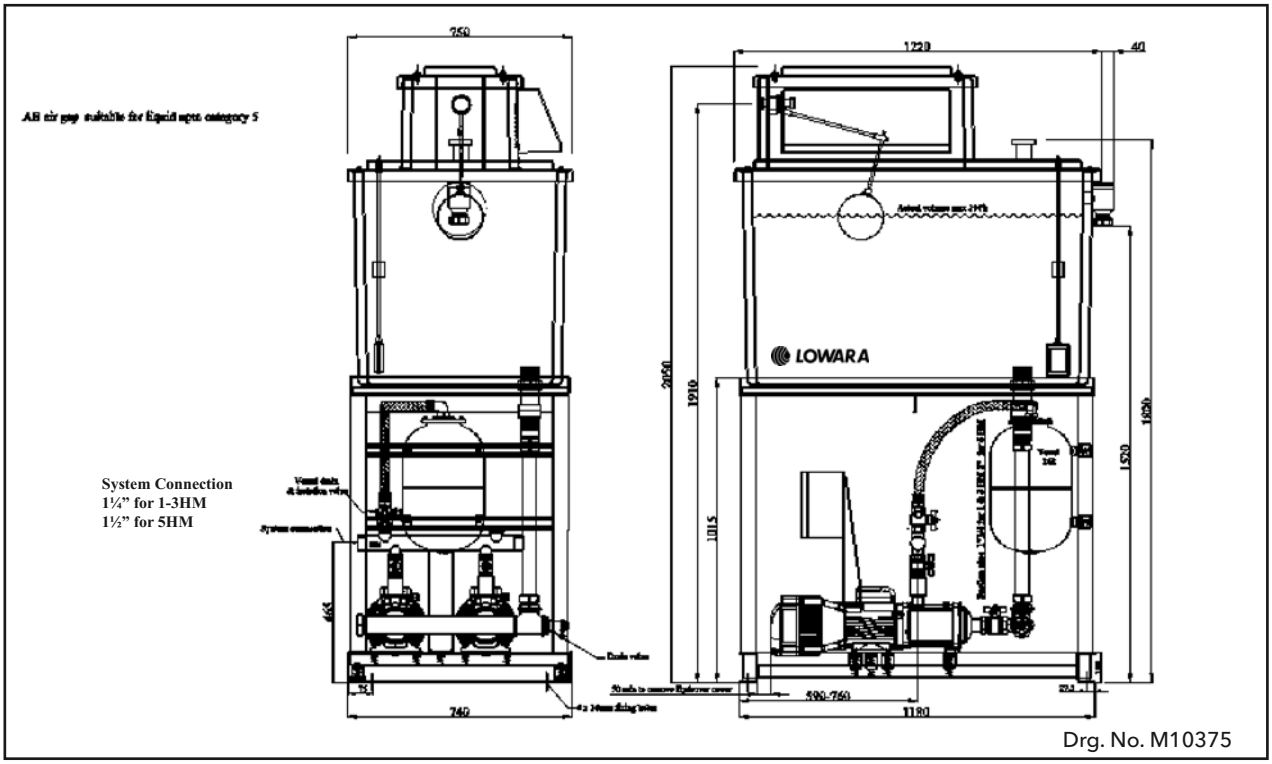

Drg. No. M10375

VARITANK FRAME MOUNTED GTKS/GHV SERIES DIMENSIONS
GTKS10/1-3-5HM OR GHV10/1-3-5HM
MAXIMUM STAGES 1HM22-3HM19-5HM15 WITH 680 LT BREAK TANK

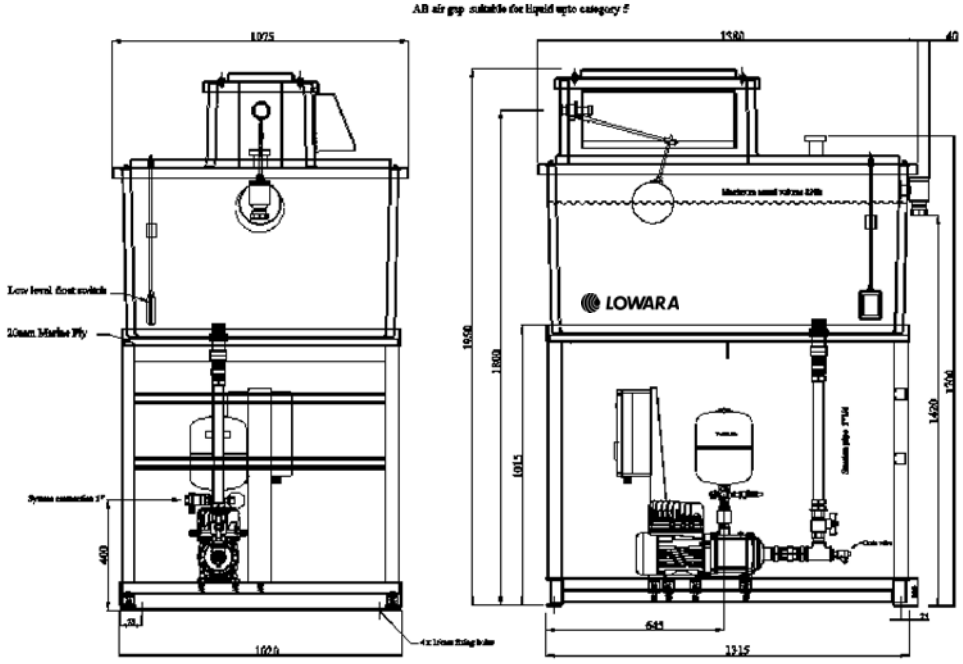

Note: GHV sets use a 24 litre vessel

Drg. No. M10386

GTKS20/1-3-5HM OR GHV20/1-3-5HM
MAXIMUM STAGES 1HM22-3HM19-5HM15 WITH 460 LT BREAK TANK

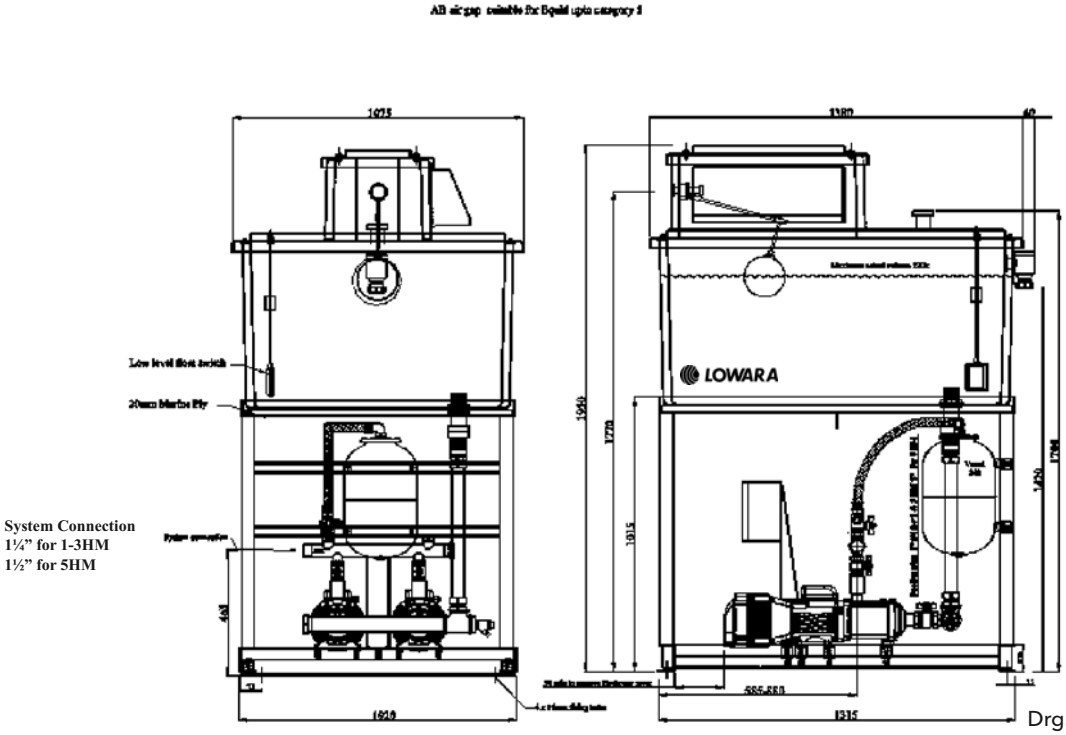

Drg. No. M10384

VARITANK FRAME MOUNTED GTKS/GHV SERIES DIMENSIONS
GTKS10/3-5HM OR GHV10/3-5HM
MAXIMUM STAGES 3HM12-5HM10 WITH 1000 LT BREAK TANK

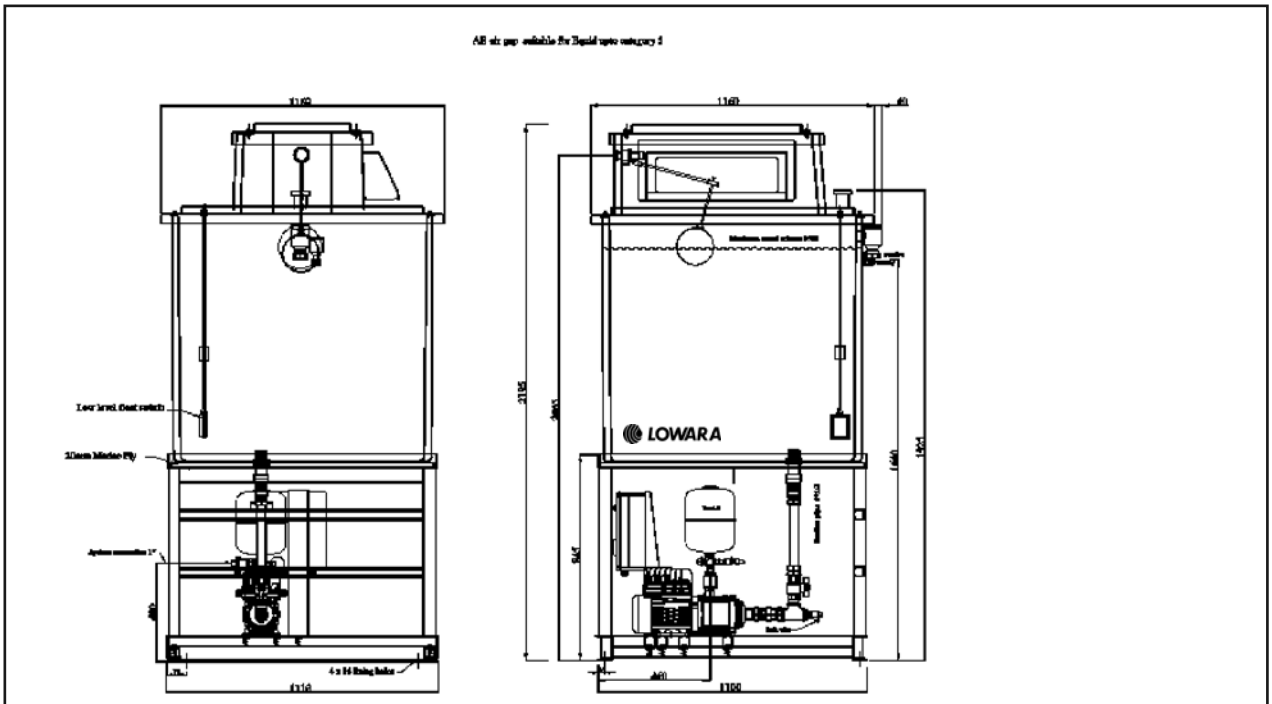

Note: GHV sets use a 24 litre vessel

Drg. No. M10389

GTKS20/3-5-10HM OR GHV20/3-5-10HM
MAXIMUM STAGES 3HM12-5HM10-10HM6 WITH 1000 LT BREAK TANK

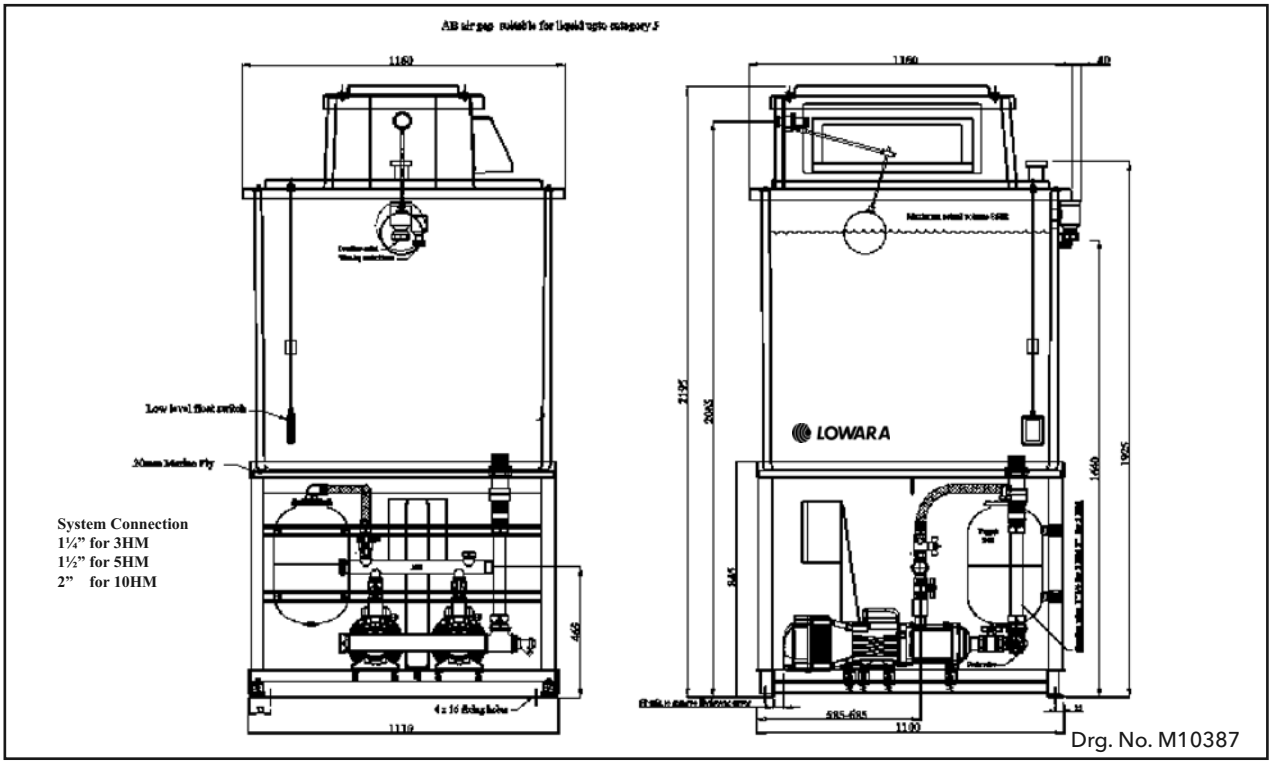

Drg. No. M10387

VARITANK FRAME MOUNTED GTKS/GHV SERIES DIMENSIONS
GTKS10/3-5HM OR GHV10/3-5HM
MAXIMUM STAGES 3HM12-5HM17-10HM11 WITH 1370 LT BREAK TANK

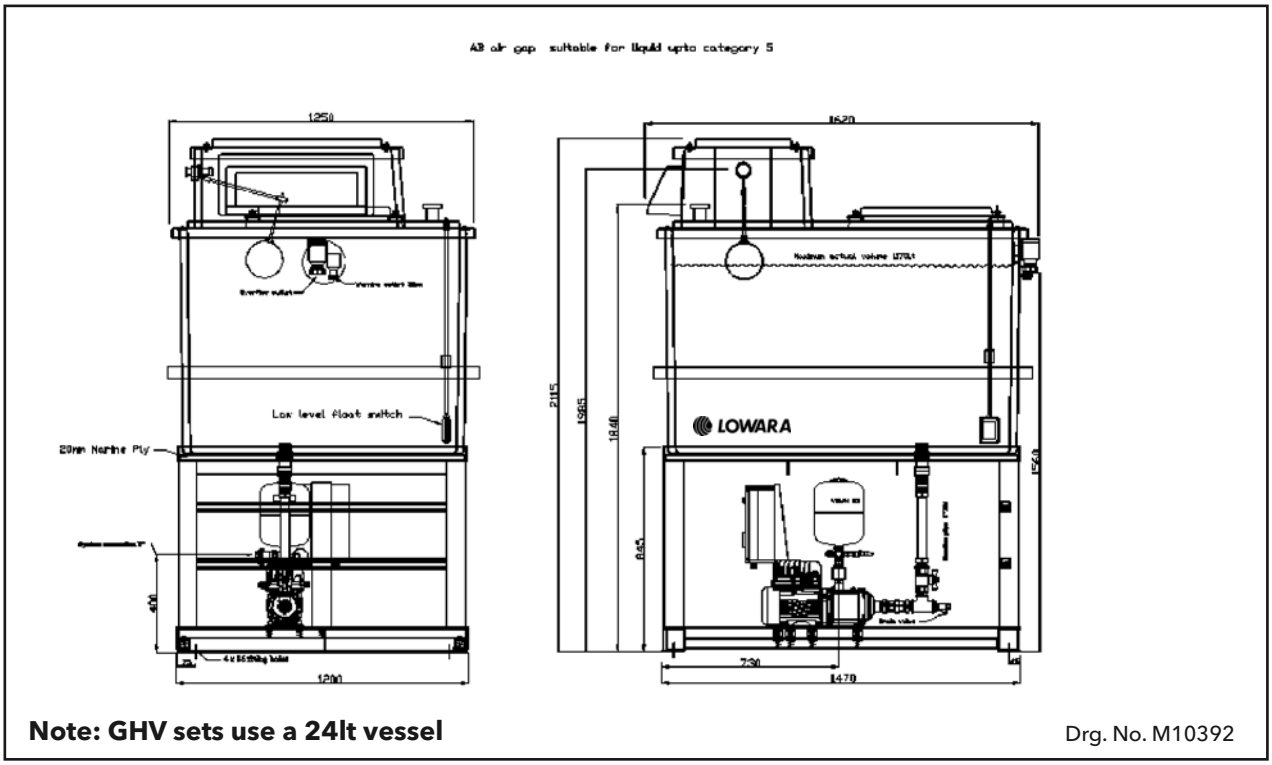

Note: GHV sets use a 24lt vessel

Drg. No. M10392

GTKS20/3-5-10HM OR GHV20-30/3-5-10HM
MAXIMUM STAGES 3HM21-5HM17-10HM11 WITH 1370 LT BREAK TANK

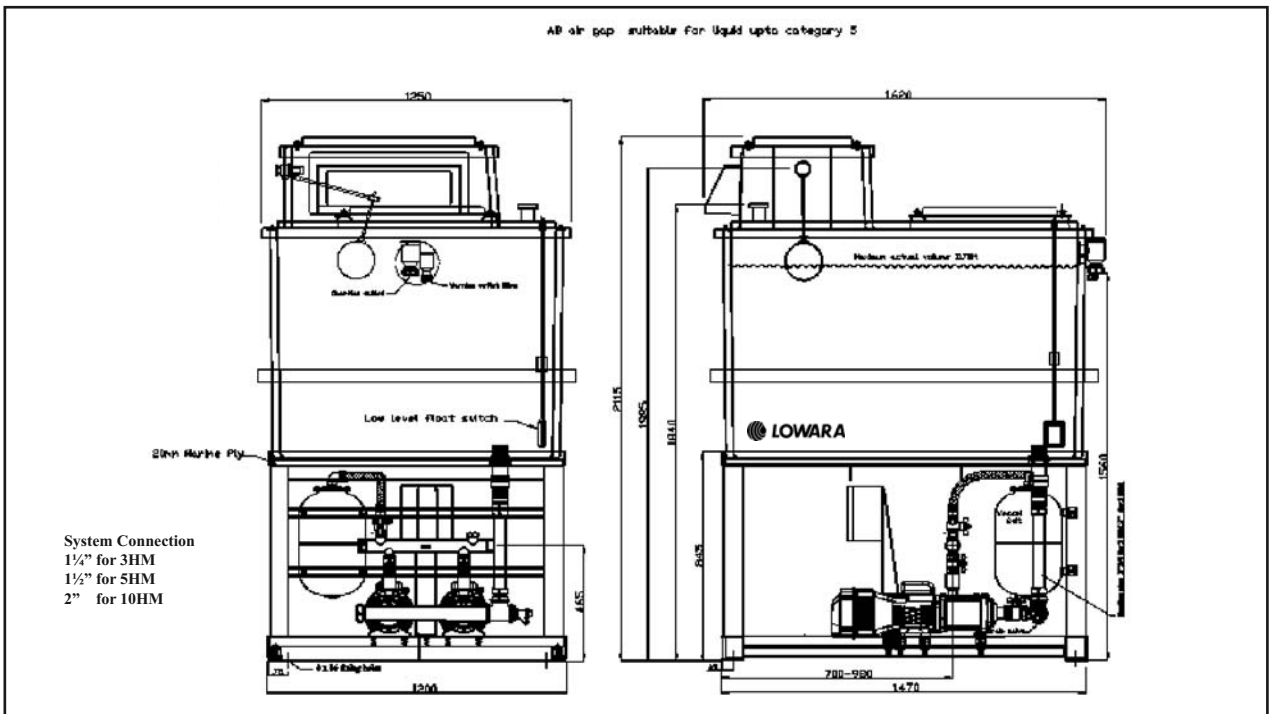

System Connection
1¼" for 3HM
1½" for 5HM
2" for 10HM

Drg. No. M10390

VARITANK FRAME MOUNTED GTKS/GHV SERIES DIMENSIONS
GTKS10/3-5HM OR GHV10/3-5HM
ALL STAGES UP TO 16 BAR WITH 1500 LITRE BREAK TANK

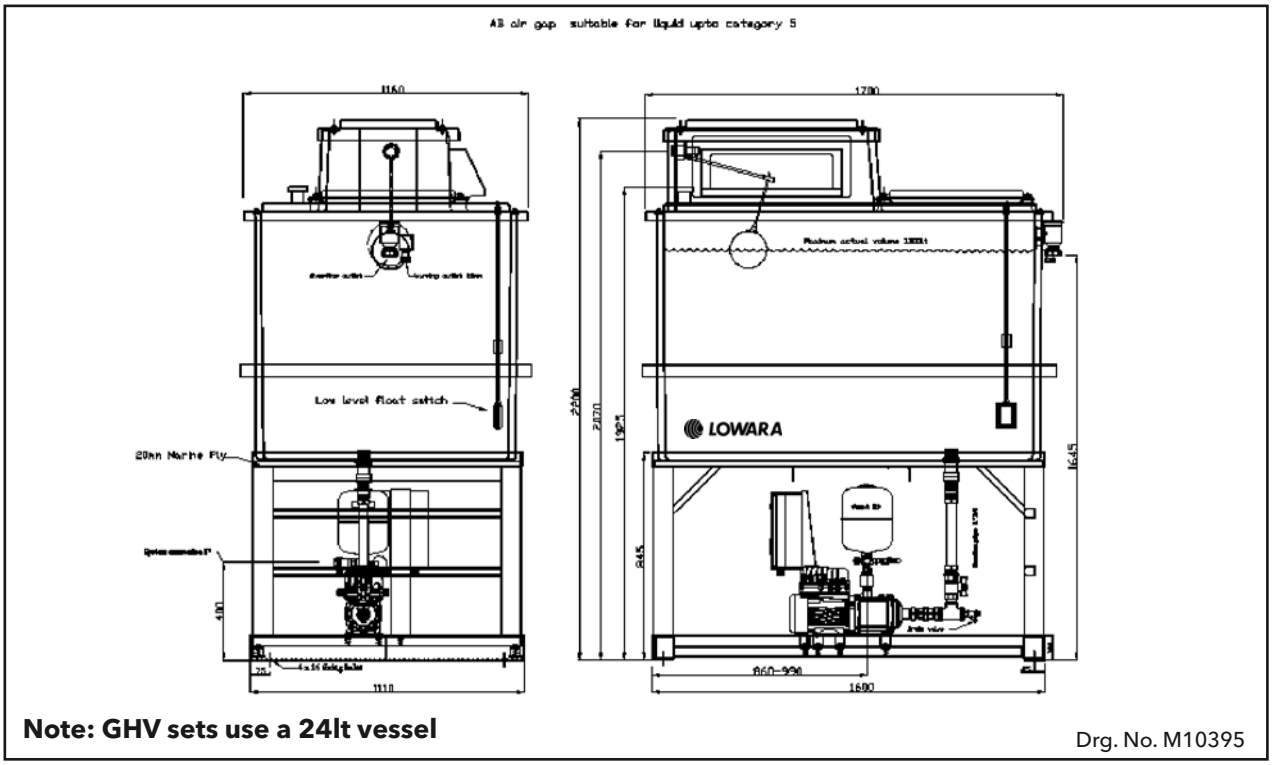

Note: GHV sets use a 24lt vessel

Drg. No. M10395

GTKS20/3-5-10HM OR GHV20-30/3-5-10HM
ALL STAGES UP TO 16 BAR WITH 1500 LITRE BREAK TANK

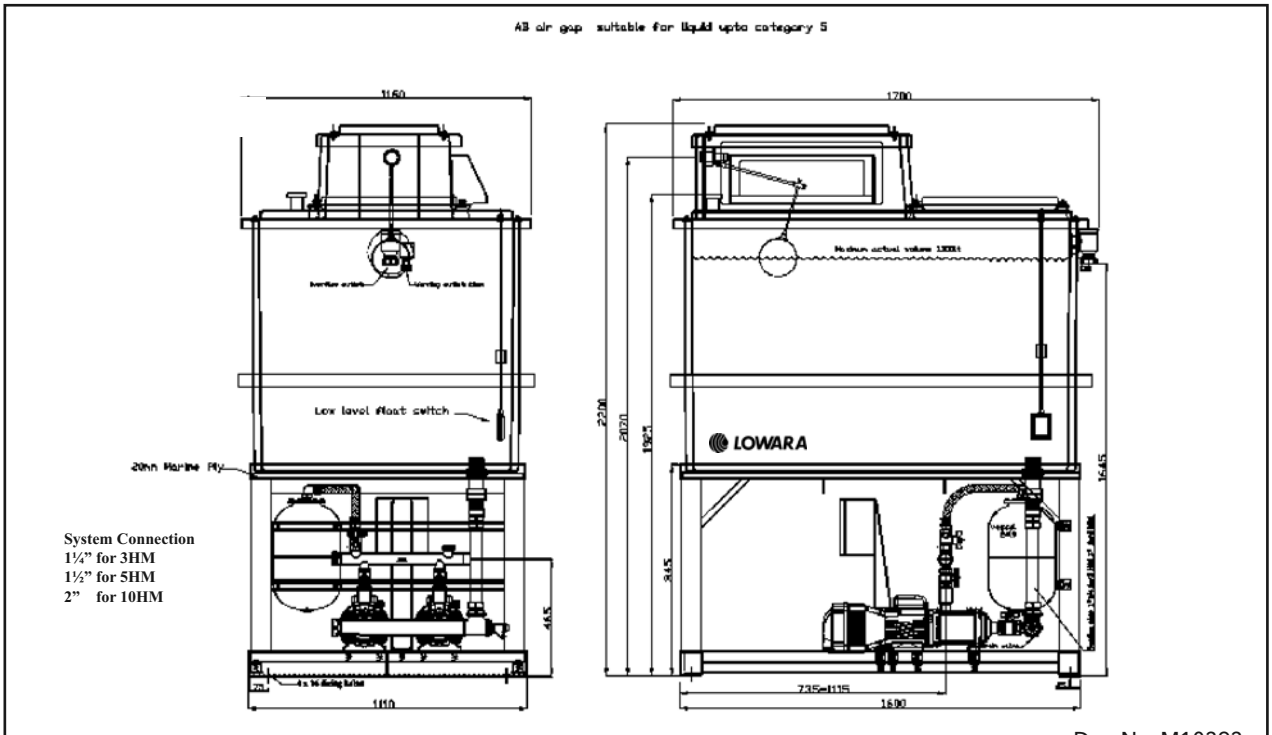

System Connection
1¼" for 3HM
1½" for 5HM
2" for 10HM

Drg. No. M10393

VARITANK FRAME MOUNTED GTKS/GHV SERIES DIMENSIONS
GTKS10/3-5HM OR GHV10/3-5HM
ALL STAGES UP TO 16 BAR WITH 2000 LITRE BREAK TANK

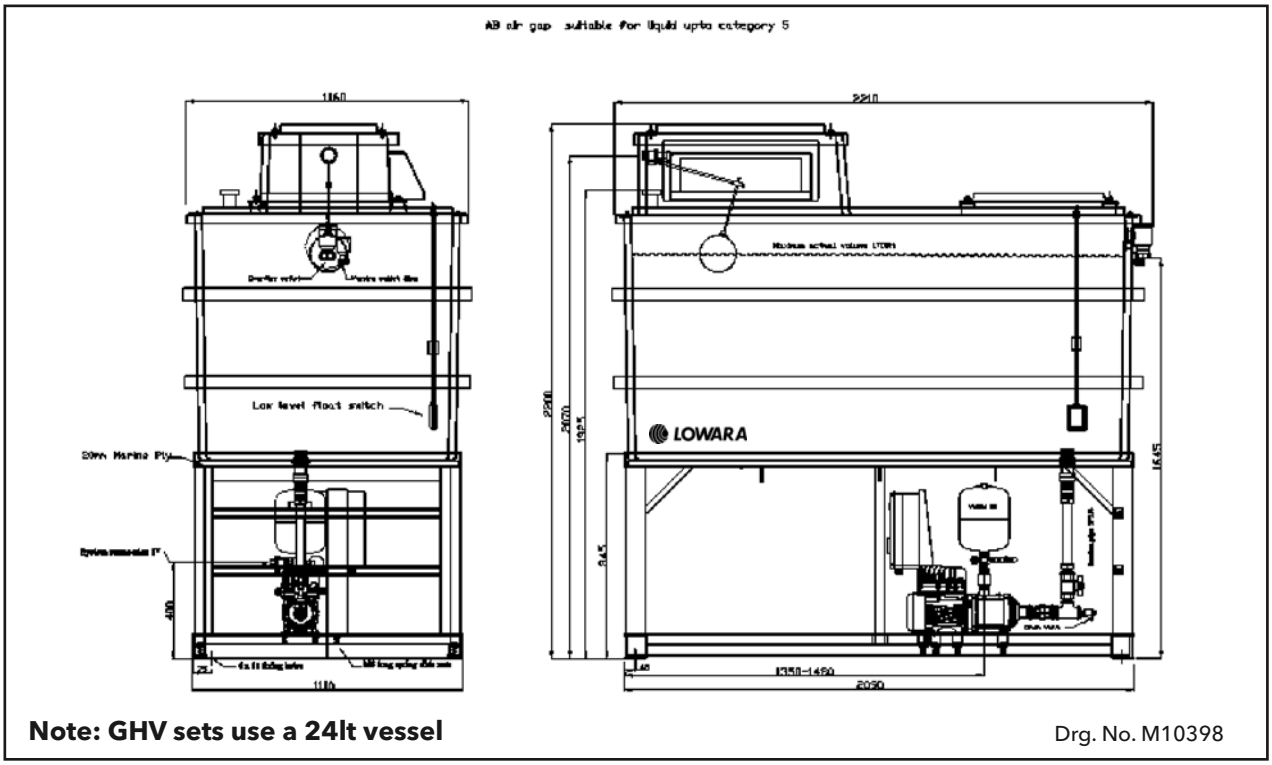

Note: GHV sets use a 24lt vessel

Drg. No. M10398

GTKS20/3-5-10HM OR GHV20-30/3-5-10-15HM
ALL STAGES UP TO 16 BAR WITH 2000 LITRE BREAK TANK

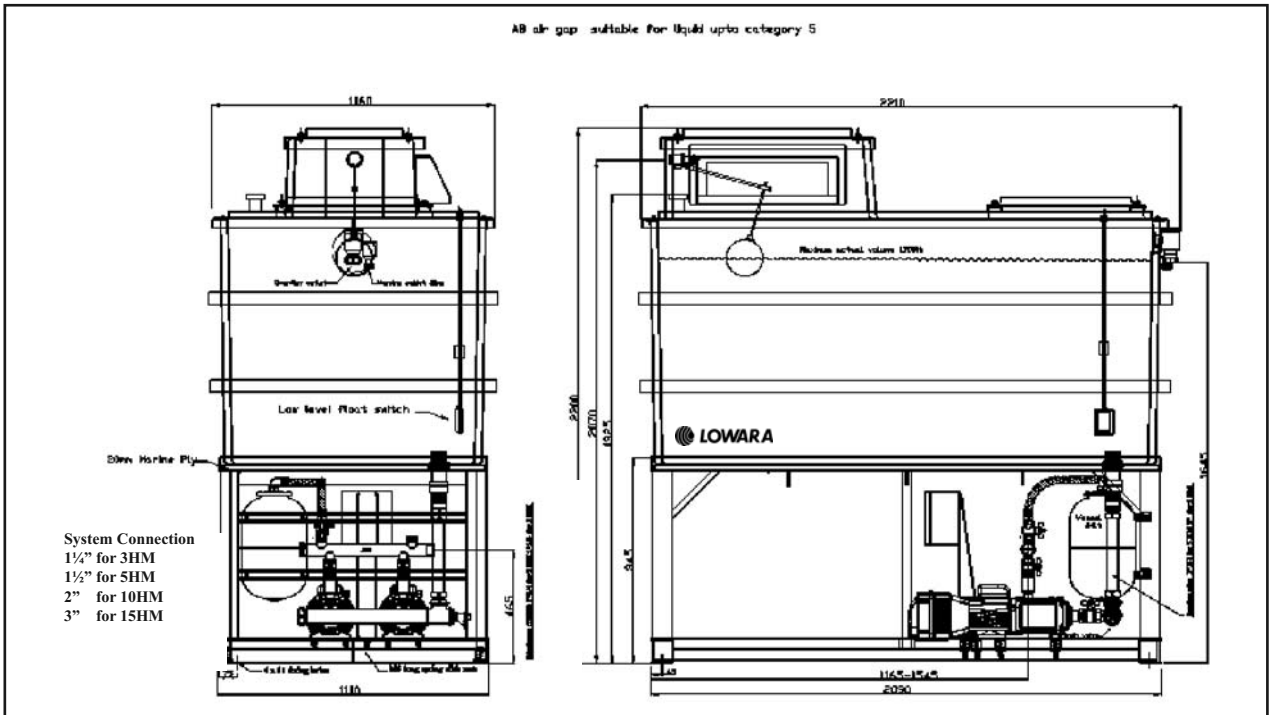

Drg. No. M10396

VARITANK FRAME MOUNTED GTKS/GHV SERIES DIMENSIONS
GTKS10/3-5-10HM OR GHV10/3-5HM
ALL STAGES UP TO 16 BAR WITH 3000 LITRE BREAK TANK

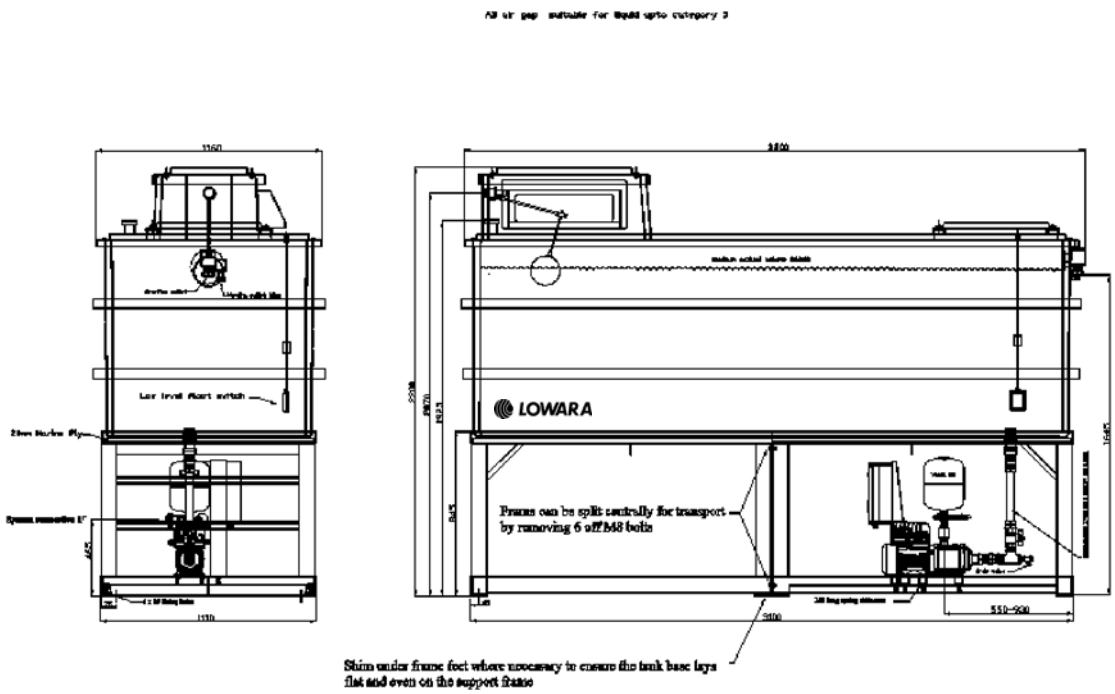

Note: GHV sets use a 24lt vessel

Drg. No. M10405

GTKS20/3-5-10HM OR GHV20-30/3-5-10-15HM
ALL STAGES UP TO 16 BAR WITH 3000 LITRE BREAK TANK

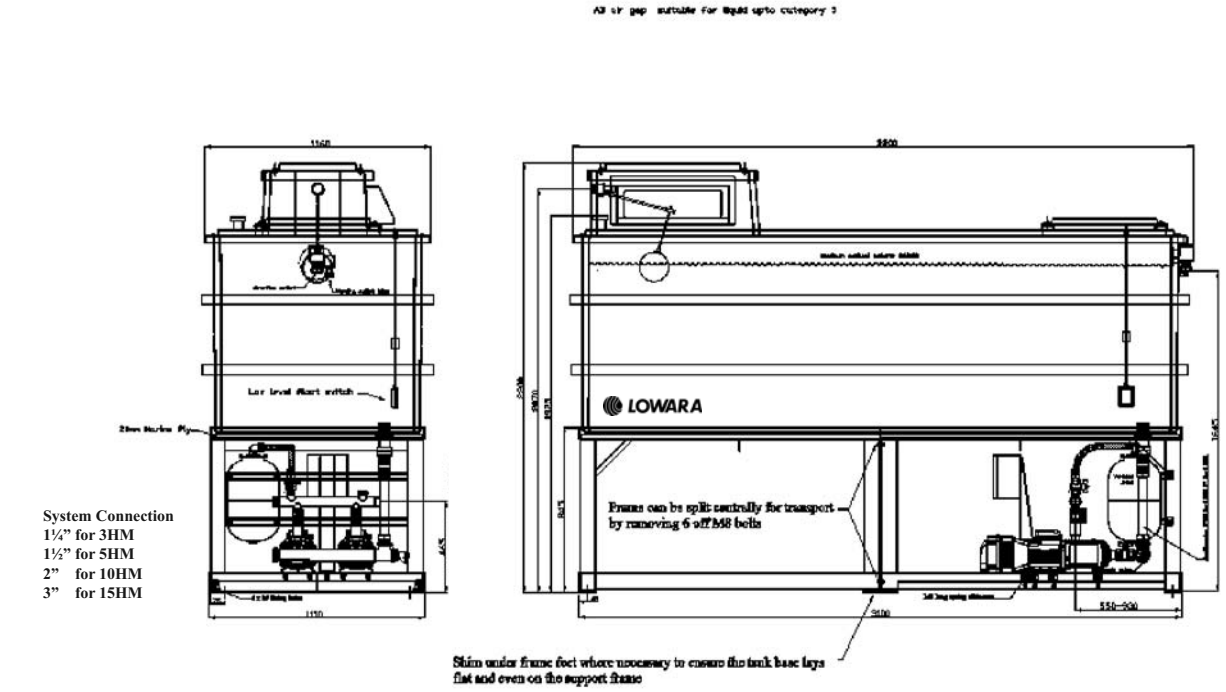

System Connection
1¼" for 3HM
1½" for 5HM
2" for 10HM
3" for 15HM

Drg. No. M10402

LOWARA
a xylem brand

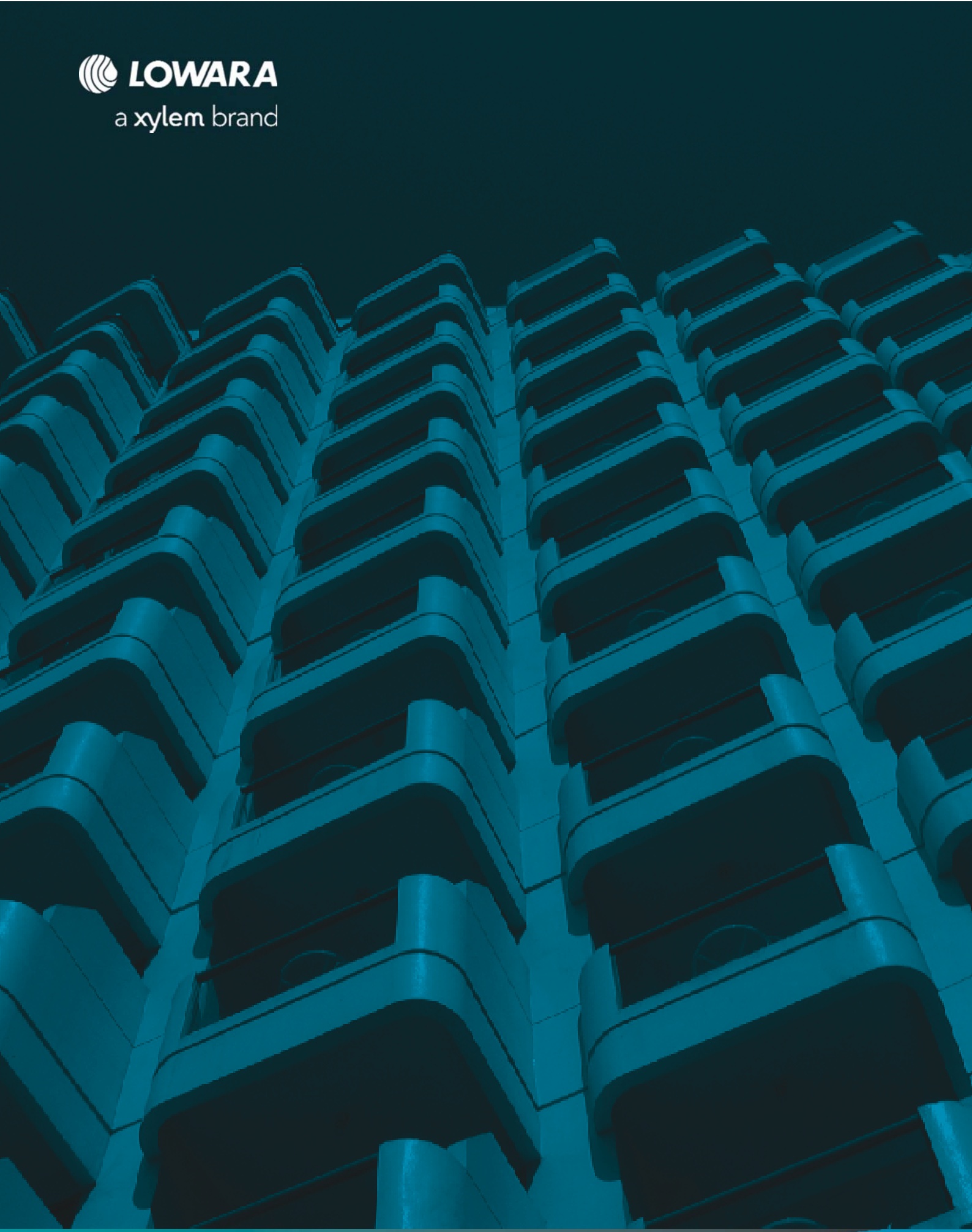

xylem
Let's Solve Water

Xylem

Xylem /'zīləm/

1) The tissue in plants that brings water upward from the roots.

2) A leading global water technology company.

We're a global team unified in a common purpose: creating innovative solutions to meet our world's water needs. Developing new technologies that will improve the way water is used, conserved, and re-used in the future is central to our work. We move, treat, analyze, and return water to the environment, and we help people use water efficiently, in their homes, buildings, factories and farms. In more than 150 countries, we have strong, long-standing relationships with customers who know us for our powerful combination of leading product brands and applications expertise, backed by a legacy of innovation.

For more information on how Xylem can help you, go to **www.xyleminc.com**

LOWARA

xylem
Let's Solve Water

Xylem Water Solutions UK Limited
Millwey Rise Industrial Estate
Axminster, Devon EX13 5HU - UK
Tel: 01297 630230
Fax: 01297 630270
Email: lowaraukenquiries@xyleminc.com
www.lowara.co.uk
www.xyleminc.com

Xylem Water Solutions Ireland Limited
50 Broomhill Close
Airton Road
Tallaght - Dublin 24
Tel: (+353) 01 4524444
Fax: (+353) 01 4524795
Email: flygtRLI@xyleminc.com
www.xylemwatersolutions.ie/

Lowara is a trademark of Xylem Inc. or one of its subsidiaries.
© 2015 Xylem, Inc.

Xylem Water Solutions UK Limited reserve the right to make modifications without prior notice.

Code UKLIT0057 P06/15

CPD

CIBSE PATRONS

Member of The PUMP BPMA industry association

MANAGEMENT SYSTEM CERTIFICATION ISO 9001 = ISO 14001 = OHSAS 18001 DNV