LOWARA
a xylem brand

Break Tank Cold Water Booster Sets GHV1-4 Hydrovar Variable Speed

Operating, Installation and Maintenance Instructions

EC Declaration of conformity

Xylem Water Solutions UK Limited declare that the GHV Booster set conforms to the requirements of the

Machinery Safety Directive	2006/42/EC.
Electromagnetic compatibility (EMC) Directive	2014/30/EU
Conforming to the UK Health & Safety Requirements	2008 No. 1597
Water supply (Water fittings) regulations	1999

Signed: C Willmott **Position:** Engineering manager **Date:** 20-04-2016 Revision B

Clive Willmott

Introduction

This leaflet contains information to enable the safe installation and operation of the products mentioned.
The following instructions must be read and understood by all persons responsible for the installation, operation and maintenance of this product.

Warning Symbols

Safety instructions where noncompliance would affect safety.

Safety instructions where electrical hazard is involved.

Safety instructions where noncompliance could cause damage to the equipment.

Instruction for safe use

This product has been designed for boosting cold water in potable water installations to the operating conditions shown.
This product should not be installed until this leaflet has been studied carefully and understood.
Handling, transportation and installation of this equipment should only take place with the proper use of lifting equipment. This product must be stored in a frost-free dry environment.

Noise Emissions

50Hz 2900 min-1	LpA (dB+/-2) SV Pumps			
P2 (KW)	1 Pump	2 Pump	3 Pump	4 Pump
2.2	<70	<70	<70	<70
3	<70	<70	<70	<70
4	<70	<70	<70	<70
5.5	<70	<70	<70	<70
7.5	71	74	76	77
11 - 22	73	76	78	79

Operating limits

Fluid temperature	0˚C to 40˚C
Ambient temperature	0˚C to 40˚C
Operating pressure	Max 8bar, 10bar, 16bar depending on set type

Protection class

Motor and Electrical panel	IP55
Hydrovar	IP55

Identification code

GHV | 20 / 10SV06F022T / M / 2000F / UK / WR

Series

10 = 1 pump
20 = 2 pumps
30 = 3 pumps
40 = 4 pumps

Pump type & motor supply

Set supply

Tank size & mtg type
F=Frame B=Base

United Kingdom

Set WRAS approval

M = Single phase
T = Three phase
No digit above 2.2kW Three phase

Installation

The cold Water booster set is despatched mounted on a wooden pallet and covered in a protective film, it is recommended that the unit be retained in the protective packaging until the product is to be installed. The unit will arrive pre-packaged and wired ready for installation. This product has been fully run tested at our works under simulated site conditions. The unit should be thoroughly checked for physical damage that may have been caused during transit. If the unit is found to have damage it must be reported immediately and should not be installed. The unit should be sited in a ventilated, dry frost free position also ensuring adequate room for general maintenance and service. The set should be fixed in position directly to the floor, if vibration separation is required then cork mats should be used supplied by others.

Generally the water tank is constructed to have a weir slot (Cat 5) as required by the water bylaws to prevent back flow contamination, if the inlet ball valve suffered a catastrophic failure the overflow may not be able to keep up with the inflow in which case excess water will be ejected through the weir slot and onto the plant room floor, if this is not acceptable then consideration should be given to fitting the break tank set onto a tray with overflow to drain.

Never run pumps dry

Ensure the pumps are filled with water before switching the electrical supply on.

Electrical connections

The electrical connections must be carried out by a competent electrician in accordance with local regulations. The cable used for the incoming supply must be of adequate size to carry the motor full load current of all pumps as they are able to operate at the same time. Motor ratings are shown on the set duty plate. All non power cable should be limited to 1.5mm². All connections must be made using the appropriate wiring drawings for the equipment being installed; with particular attention being paid to the supply voltages. The supply voltage is shown on the set duty plate.

Never operate this product with isolation panels removed or the control panel door in the open position. These Sets are fitted with variable speed drives which include large capacitors so wait at least 8 minutes after the supply has been removed before opening or removing covers.

It is essential that this equipment is earthed to the building earth system.

All metal parts must be earth bonded directly to the building earth system.

Electrical data GHV20/30/40

Nominal power (kW) 1 pump	GHV10 - 20 1 single phase Absorbed current (A) 1 x 230V		GHV10 - 20 three phase Absorbed current(A) 3 x 400V		GHV30 three phase Absorbed current(A) 3 x 400V	GHV40 three phase Absorbed current(A) 3 x 400V
kW	**GHV10**	**GHV20**	**GHV10**	**GHV20**	**GHV30**	**GHV40**
0.75	6.3	12.6	-	-	-	-
1.1	8.14	16.28	2.36	5.0	7.4	9.9
1.5	10.8	21.6	2.97	6.2	9.4	12.5
2.2	15.7	31.4	4.33	9.1	13.6	18.2
3			6.07	12.7	19.1	25.5
4			7.63	16.0	24.0	32.0
5.5			10.4	21.8	32.8	43.7
7.5			14.0	29.4	44.1	58.8
11			20.3	42.6	63.9	85.3
15			26.0	54.6	81.9	109.2

Water supply connection

Connect the incoming water supply to the break tank ball valve. The outlet of the tank will already be connected to the booster set suction manifold. The tank will generally include a class AB air gap (Category 5 protection) the tank will also include a low level float switch connected to the booster set to protect against dry running. Connect the 22mm warning pipe (where fitted) to a position where a discharge will cause a nuisance and be remedied. Connect the overflow pipe to drain. When the tank has been filled check the water level and adjust ball valve as necessary.

Ensure the tank is thoroughly flushed through before the set is put on line.

It is the responsibility of the installer to ensure that the overflow is able to keep up with the incoming water volume, if this is not the case then a pressure reducing valve should be fitted to reduce the incoming mains water volume.

Discharge pipe work

The discharge pipe work can be connected to either end of the booster set, ensure the blanking cap is fitted to the end not used. A flexible connector fitted between the booster discharge manifold and the system connection pipe will help prevent the transmission of noise/vibration. An isolation valve should be provided between the booster discharge line and the system to aid maintenance. The discharge pipe work should be sized to achieve a maximum velocity of approximately 2.5m/s.

Pressure vessels

GHV variable speed booster set can operate with relatively small vessels; each set is supplied with 1 x 24lt vessel for each pump which is more than adequate for the set to function correctly. Larger vessel can be added if required. If stand alone vessels are added they should have an isolation valve and drain cock fitted to allow the vessel to be isolated from the system and drained to check the pre-charge pressure.

Hydrovar basic setting details

All standard GHV booster sets are arranged for all the Hydrovars to be set as masters so if one inverter fails the next Hydrovar will take control. The booster set will come with all basic settings for Cascade serial mode (multi-pump applications) set as standard. The only parameters that may need changing are the SET POINT (parameter 2) this will normally have been set to match the pumps fitted but can be adjusted by pressing the up/down button and the AUTO START (parameter 8) which should be set to AUTO START see flow chart below for details. The settings entered will be automatically entered in all remaining pumps. Hydrovar errors are logged and time tagged to enable sequence of errors to be checked.

NOTE: Never set the maximum frequency above 50Hz as this will lead to inverter overload.

For more advanced settings please see the Hydrovar technical manual.

When the unit is first powered up the default setting will be Auto start off.

Minimum threshold

Minimum threshold can be set (Parameter 605) to a low pressure value which can be used to stop the set if the pressure falls to this low limit (typically 1 bar) for a period of time (typically 8 seconds) set in (parameter 610). Note: This time delay also acts on the low water level input.

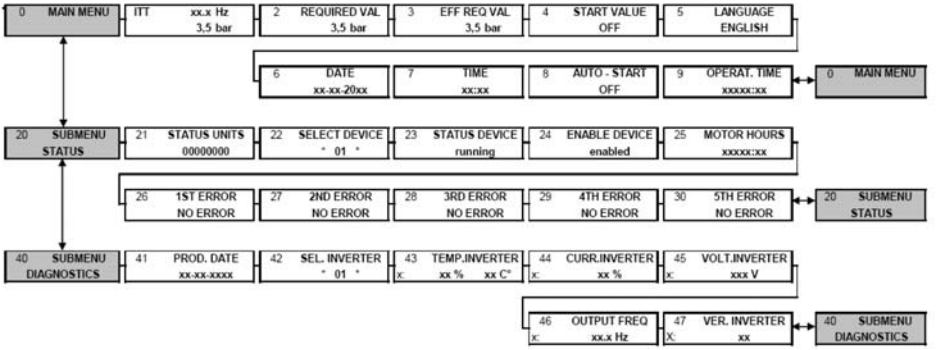

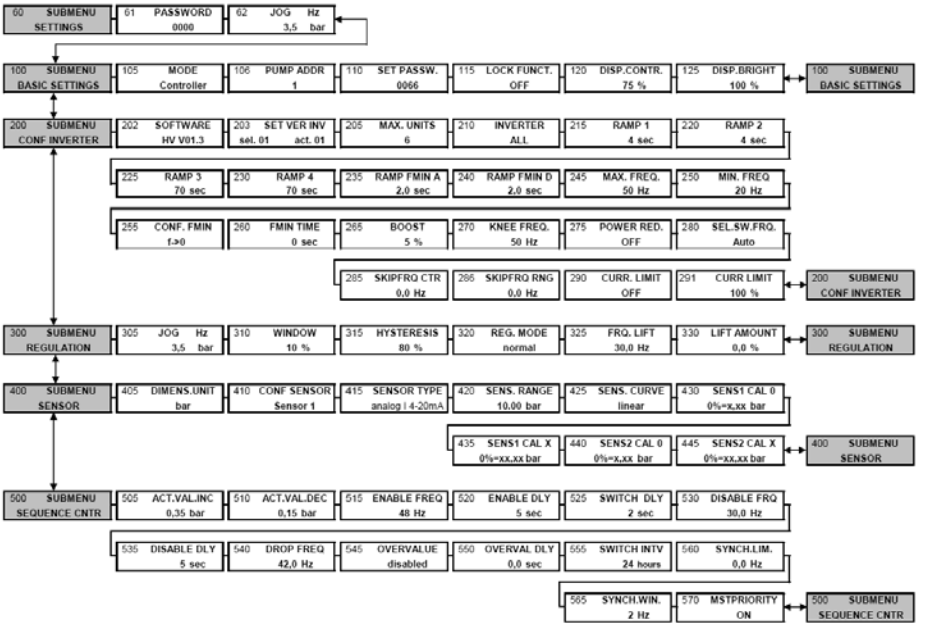
60 SUBMENU SETTINGS
61 PASSWORD 0000
62 JOG Hz 3,5 bar
100 SUBMENU BASIC SETTINGS
105 MODE Controller
106 PUMP ADDR 1
110 SET PASSW. 0066
115 LOCK FUNCT. OFF
120 DISP.CONTR. 75 %
125 DISP.BRIGHT 100 %
100 SUBMENU BASIC SETTINGS
200 SUBMENU CONF INVERTER
202 SOFTWARE HV V01.3
203 SET VER INV sel. 01 act. 01
205 MAX. UNITS 6
210 INVERTER ALL
215 RAMP 1 4 sec
220 RAMP 2 4 sec
225 RAMP 3 70 sec
230 RAMP 4 70 sec
235 RAMP FMIN A 2,0 sec
240 RAMP FMIN D 2,0 sec
245 MAX. FREQ. 50 Hz
250 MIN. FREQ 20 Hz
255 CONF. FMIN f.>0
260 FMIN TIME 0 sec
265 BOOST 5 %
270 KNEE FREQ. 50 Hz
275 POWER RED. OFF
280 SEL.SW.FRQ. Auto
285 SKIPFRQ CTR 0,0 Hz
286 SKIPFRQ RNG 0,0 Hz
290 CURR. LIMIT OFF
291 CURR LIMIT 100 %
200 SUBMENU CONF INVERTER
300 SUBMENU REGULATION
305 JOG Hz 3,5 bar
310 WINDOW 10 %
315 HYSTERESIS 80 %
320 REG. MODE normal
325 FRQ. LIFT 30,0 Hz
330 LIFT AMOUNT 0,0 %
300 SUBMENU REGULATION
400 SUBMENU SENSOR
405 DIMENS.UNIT bar
410 CONF SENSOR Sensor 1
415 SENSOR TYPE analog I 4-20mA
420 SENS. RANGE 10.00 bar
425 SENS. CURVE linear
430 SENS1 CAL 0 0%=x,xx bar
435 SENS1 CAL X 0%=xx,xx bar
440 SENS2 CAL 0 0%=x,xx bar
445 SENS2 CAL X 0%=xx,xx bar
400 SUBMENU SENSOR
500 SUBMENU SEQUENCE CNTR
505 ACT.VAL.INC 0,35 bar
510 ACT.VAL.DEC 0,15 bar
515 ENABLE FREQ 48 Hz
520 ENABLE DLY 5 sec
525 SWITCH DLY 2 sec
530 DISABLE FRQ 30,0 Hz
535 DISABLE DLY 5 sec
540 DROP FREQ 42,0 Hz
545 OVERVALUE disabled
550 OVERVAL DLY 0,0 sec
555 SWITCH INTV 24 hours
560 SYNCH.LIM. 0,0 Hz
565 SYNCH.WIN. 2 Hz
570 MSTPRIORITY ON
500 SUBMENU SEQUENCE CNTR

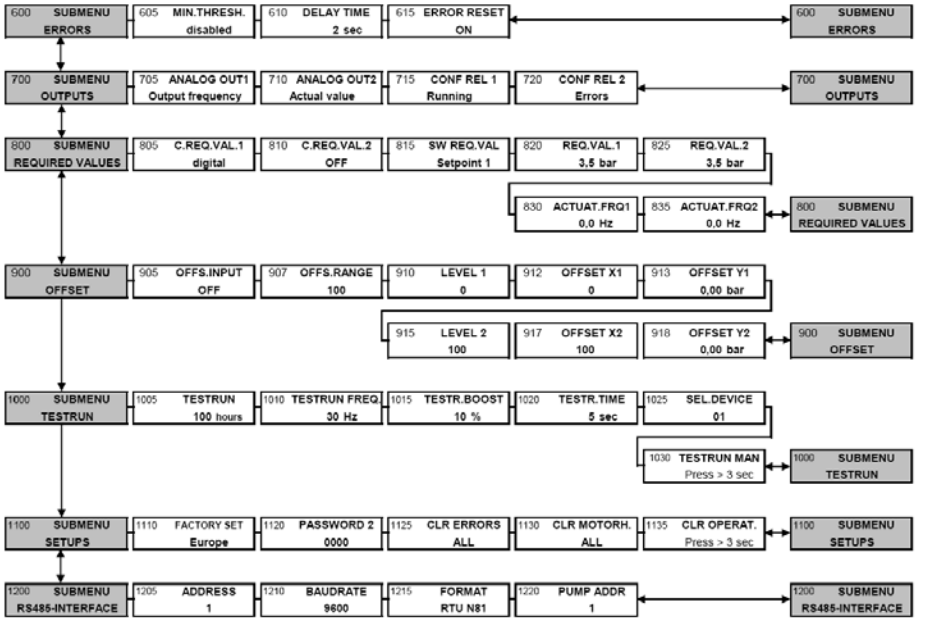
600 SUBMENU ERRORS
605 MIN.THRESH. disabled
610 DELAY TIME 2 sec
615 ERROR RESET ON
600 SUBMENU ERRORS
700 SUBMENU OUTPUTS
705 ANALOG OUT1 Output frequency
710 ANALOG OUT2 Actual value
715 CONF REL 1 Running
720 CONF REL 2 Errors
700 SUBMENU OUTPUTS
800 SUBMENU REQUIRED VALUES
805 C.REQ.VAL.1 digital
810 C.REQ.VAL.2 OFF
815 SW REQ.VAL Setpoint 1
820 REQ.VAL.1 3,5 bar
825 REQ.VAL.2 3,5 bar
830 ACTUAT.FRQ1 0,0 Hz
835 ACTUAT.FRQ2 0,0 Hz
800 SUBMENU REQUIRED VALUES
900 SUBMENU OFFSET
905 OFFS.INPUT OFF
907 OFFS.RANGE 100
910 LEVEL 1 0
912 OFFSET X1 0
913 OFFSET Y1 0,00 bar
915 LEVEL 2 100
917 OFFSET X2 100
918 OFFSET Y2 0,00 bar
900 SUBMENU OFFSET
1000 SUBMENU TESTRUN
1005 TESTRUN 100 hours
1010 TESTRUN FREQ 30 Hz
1015 TESTR.BOOST 10 %
1020 TESTR.TIME 5 sec
1025 SEL.DEVICE 01
1030 TESTRUN MAN Press > 3 sec
1000 SUBMENU TESTRUN
1100 SUBMENU SETUPS
1110 FACTORY SET Europe
1120 PASSWORD 2 0000
1125 CLR ERRORS ALL
1130 CLR MOTORH. ALL
1135 CLR OPERAT. Press > 3 sec
1100 SUBMENU SETUPS
1200 SUBMENU RS485-INTERFACE
1205 ADDRESS 1
1210 BAUDRATE 9600
1215 FORMAT RTU N81
1220 PUMP ADDR 1
1200 SUBMENU RS485-INTERFACE

Slow fill mode
All Hydrovar sets are fitted with slow fill controls to help prevent excessive pressures being excreted on system pipe work when the set comes back on line after a power outage or low water condition.

Slow fill operation
When the set powers up or comes back on line after a low water condition it will automatically inhibit all pumps except pump 1 which will ramp up slowly and maintain a set point approximately equal to the height of the building (system pressure – 2 bar) it will remain at this set point until the delay timer normally set for two minutes (adjustable) times out and resets the Hydrovars to set point one allowing pump one to speed up to the normal system set point and release all other pumps to cascade in as required.

Commissioning
With the main power isolated check:
1.The break tank feeding the set is filled with water.
2.The set/system vessels have been charged with Nitrogen to the correct pressure (set point -0.2 bar).
3.Open suction line isolation valve where fitted.
4.Open suction and discharge pump isolation valves.
5.Close main discharge isolation valve.
6.Open the pump vents at the top of each pump.
7.Allow all air to escape until water flows freely.
8.Close pump vent valves.
9.Open discharge valve.
10.Ensure all vessel valves are open.
11.Switch the main power supply on.
12.Check the set point is as required.
13.Switch the inverters to the on position by pressing the up button Note: only 1 pump will be allowed to run in the first two minutes of power up after which all other pumps will be released to run.
Once the system pressure has been satisfied the last pump should ramp down and after a short while stop completely until a demand is placed on the system again.

Operation
The booster set is designed to maintain a constant system pressure with varying flows.
Each Hydrovar head has its own 4-20ma transducer which monitors the system pressure at all times.
If one Hydrovar or transducer fails the next Hydrovar will take on the master function. All Hydrovars talk to each other through a RS485 serial coms link. Each Hydrovar head is fitted with four function keys: Up/Down Left/Right these are used to navigate through the parameters and change as appropriate. Three LEDs are provided to indicate: Power-Run-Error.
When a demand is placed on the system, water will be supplied from any vessels that are fitted to the system, once this supply is depleted the system pressure will start to fall, when the pressure falls 0. 15 bar (par 0510) below the system set point the first Hydrovar will start to ramp up to maintain the set point, if demand increases and the first Hydrovar reaches maximum speed and again the system pressure falls 0.15 bar blow set point the next Hydrovar will be called in to ramp up and assist the first pump, the set point will have been raised by 0.35 bar (par 0505) to give a differential between pumps. All the time demand increases, further Hydrovars will be called in to assist until all Hydrovars are running. When demand reduces the last Hydrovar to be called in will start to ramp down and eventually stop, if demand continues to decrease the next Hydrovar will start to ramp down and stop, this will continue until all Hydrovars have stopped. The next time the pressure falls the same sequence as above will operate except the first Hydrovar to operate will have been rotated so all Hydrovars have even usage. See Fig1 below
On sets where a Jockey pump is fitted the sequence will be for the jockey pump to be the first to operate on all occasions and it will not be connected to the main Hydrovars with a coms link.
If a low level in the break tank occurs all pumps will be stopped until the water supply has been reinstated, the pumps will then be automatically released to resume normal operation.
The booster set has a remote inhibit facility allowing the set to be stopped/started from a remote source (open contact to inhibit) See electrical drawing for connection details.

Pump operating sequence

Fig 1.

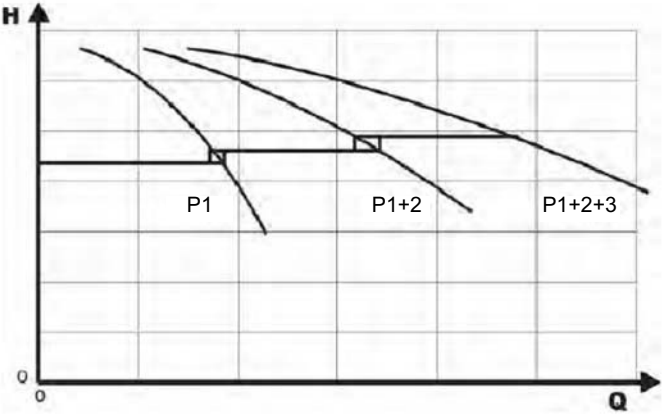

Volt Free Contacts
Volt free Change/over contacts are available for Run & fault conditions for each Hydrovar. See electrical drawing for connection details.

Remote inhibit
A remote normally closed contact can be used to remotely inhibit the booster set. (open to inhibit) See electrical drawing for connection details.

Caution

This booster set is an automatic machine; the pumps may start up automatically without prior warning.
The set contains pressurised water; reduce the pressure to zero before servicing.

SV Pump Set

See specific pump O&Ms for more in depth pump detail

List of main components

Item	Component
1	Electric panel
2	Pump suction isolation valve
3	Pump discharge isolation valve
4	Vessel isolation valve & drain
5	Discharge manifold
6	Suction manifold
7	Non return valve
8	Pump
9	Hydrovar inverter
10	Vessel 24lt
11	Flexible Connector

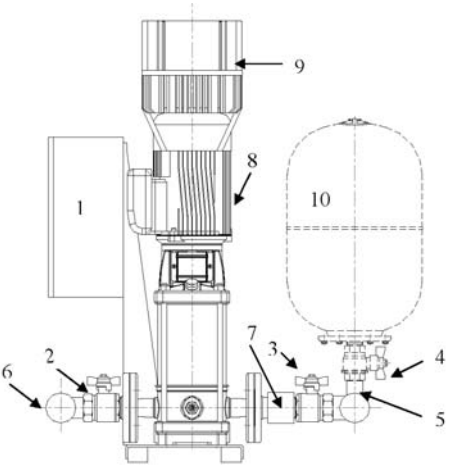

Note:
The use of spare parts not supplied by Lowara will invalidate the guarantee.

HM Pump Set

List of main components

Item	Component
1	Electric panel
2	Pump suction isolation valve
3	Pump discharge isolation valve
4	Vessel isolation valve & drain
5	Discharge manifold
6	Suction manifold
7	Non return valve
8	Pump
9	Hydrovar inverter
10	Vessel 24lt
11	Flexible Connector

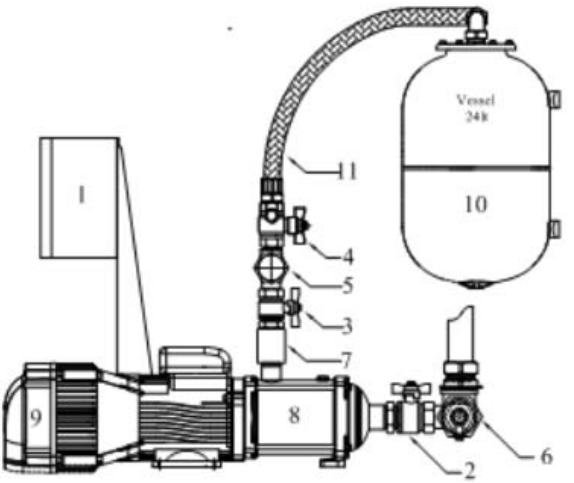

See specific pump O&Ms for more in depth pump detail

Note:
The use of spare parts not supplied by Lowara will invalidate the guarantee.

Maintenance

Routine check (6 monthly intervals)

1. Check all pumps produces the correct pressure.
2. Check that the pump operates without undue noise or vibration.
3. Check the break tank is clean and that the correct water level has been maintained.
4. Check that all screws are tight on electrical components.
5. Check that the earth connections are tight and making good contact.
6. Check that the gas pre charge is at the correct pressure, this should be done by isolating the vessel from the system and draining water out of the vessel via the isolation valve drain point.

Once the water has been discharged, a tyre gauge can be connected to the pre charge valve to display the vessel pre charge pressure. Recharge as necessary with Nitrogen or dry air.
Any other expansion vessels connected to the system can be checked in the same manner.
Clean any filters that may be connected to suction/discharge lines and ensure the mesh is in good condition.

Yearly intervals
Drain the break tank and using clean water only, clean all internal surfaces using non-metallic equipment and tools. Remove any debris found in the tank. Check and clean filters in overflow/warning pipe (If accessible) Refill the tank with clean fresh water, disinfect and leave to stand for 60 minutes. Test water for correct PPM levels.

General fault finding guide

Fault	Possible Cause	Remedy
Pump fails to start	Power supply failure Control panel fuse blown, MCB tripped Remote inhibit active Low water level	Reinstate incoming power supply Replace power supply fuse Reset MCB Turn remote inhibit off Reinstate water supply
Pump fails to stop	Set point set too high Manual operation selected System pressure low due to large leak	Lower set point Select Auto operation Switch unit off until leak is repaired
Pump switches on and off quickly	Air in system Vessel pre-chargeincorrect	Purge air from pumps and pipework Check vessel pre-charge and Charge as necessary with Nitrogen or dry air
Pump runs but will not make pressure	Pump air locked Non-return valve jammed Incorrect rotation Passing too much water	Open pump bleed screw and vent pump Clean/ replace valve Check pump internal connections Check system for leaks
Pump overheating	Pump partially seized	Remove pump and check for foreign objects
Pump set frequently starting. (pressure falls to cut in point)	Newly installed system with large amount of air in pipe work Leaks in system pipe work Vessel pre-charge incorrect	Bleed system to remove air Repair leaks Isolate vessel and pre-charge with Nitrogen as appropriate
Break tank overflowing	Leaking ball valve Non-return valve letting by	Replace ball valve seal Replace/clean non-return valve
Pump leaks water	Defective mechanical seal Undue mechanical stress on pump	Replace seal Support the pipe work

Disposal
Disposal of this product should be carried out in accordance of local codes and regulation pertaining to the disposal of waste, including packaging materials.

xylem
Let's Solve Water

Xylem Water Solutions UK Limited
Millwey Rise Industrial Estate, Axminster, Devon EX13 5HU - UK
Tel: 01297 630230 Fax: 01297 630270
e-mail: lowaraukenquiries@xyleminc.com
www.lowara.co.uk www.xyleminc.com

Code UKLIT0141 P04/16