60 Hz

e-SV™ Series
1, 3, 5, 10, 15, 22
33, 46, 66, 92, 125

HIGH EFFICIENCY VERTICAL MULTISTAGE ELECTRIC PUMPS
EQUIPPED WITH IE2/IE3 MOTORS COMPLYING WITH REGULATION (EC) no. 640/2009

Cod. G91012081 Rev.B Ed.06/2012

GOULDS WATER TECHNOLOGY
a xylem brand

GOULDS WATER TECHNOLOGY
a xylem brand

e-SV™ SERIES
HYDRAULIC PERFORMANCE RANGE AT 60 Hz

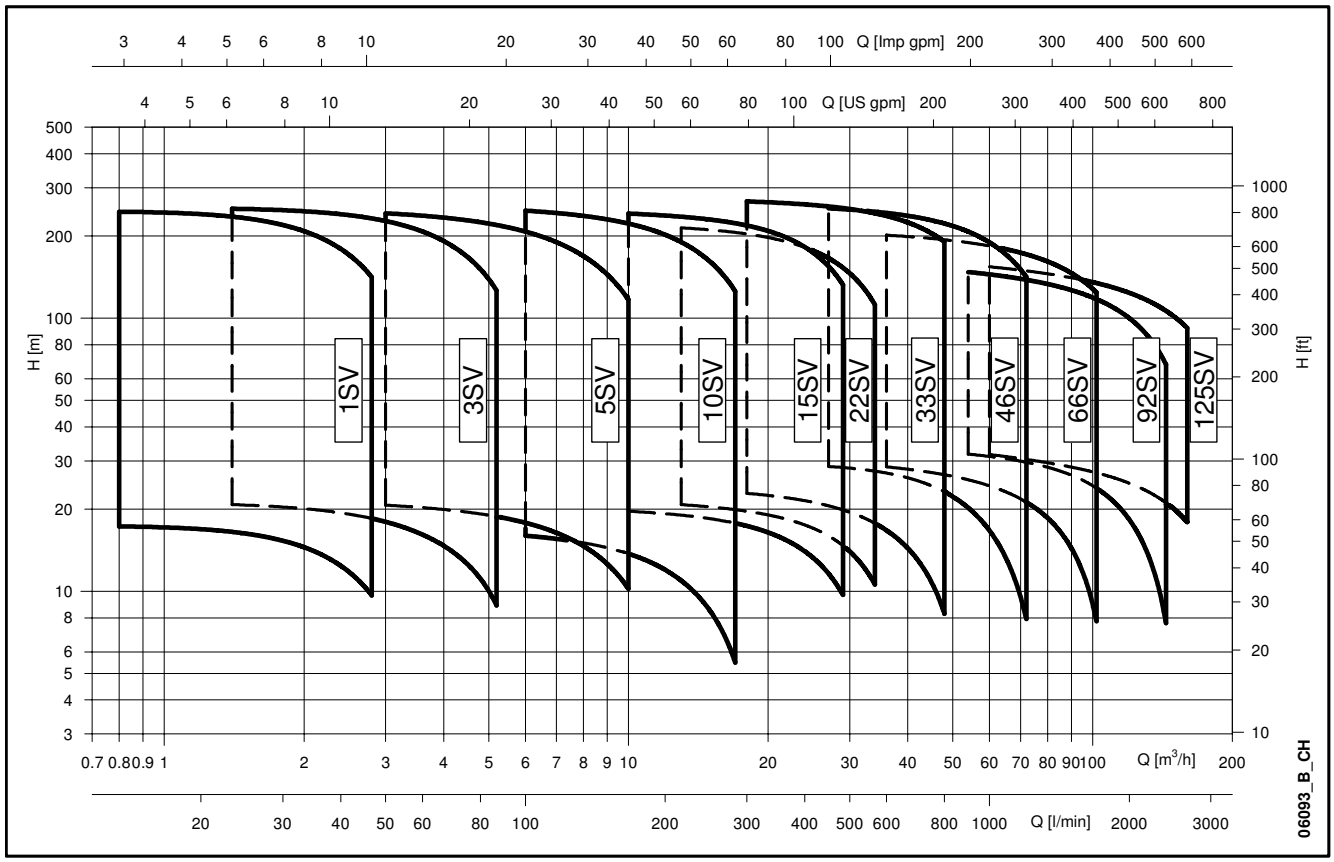

GOULDS WATER TECHNOLOGY
a xylem brand

CONTENTS

e-SV™ series specifications 5

Characteristics of 1, 3, 5, 10, 15, 22, 33, 46, 66, 92, 125SV series 6

General characteristics 7

Identification code 8

1, 3, 5SV series and 10, 15, 22SV series ≤ 4 kW, pump cross section and main components 10

10, 15, 22SV series ≥ 5,5 kW, pump cross section and main components 11

33, 46, 66, 92, 125SV series, pump cross section and main components 12

125SV series, pump cross section and main components 13

Mechanical seals 14

Motors 16

SVH series pumps with Hydrovar® control system 20

Typical applications of e-SV™ pumps 22

Hydraulic performance range e-SV™ series at 60 Hz, 2 poles 23

Dimensions and weights at 60 Hz, 2 poles 28

Operating characteristics e-SV™ series at 60 Hz, 2 poles 29

Accessories 51

Special versions 54

Technical appendix 55

Vertical Multistage Electric Pumps

e-SV™ series

MARKET SECTORS

CIVIL, AGRICULTURAL, LIGHT INDUSTRY, WATER TREATMENT, HEATING AND AIR CONDITIONING.

APPLICATIONS

- Handling of water, free of suspended solids, in the civil, industrial and agricultural sectors.
- Pressure boosting and water supply systems.
- Irrigation systems.
- Wash systems.
- Water treatment plants.
- Handling of moderately aggressive liquids, demineralised water, water and glycol, etc.
- Circulation of hot and cold water for heating, cooling and conditioning systems.
- Boiler feed.
- Pharmaceutical industries.
- Food & beverage industries.

- ❑ **LIQUID END MADE ENTIRELY OF STAINLESS STEEL IN THE 1, 3, 5, 10, 15, 22 m³/h STANDARD VERSION**
- ❑ **STANDARD MECHANICAL SEAL CAN BE REPLACED WITHOUT REMOVING THE MOTOR FROM THE PUMP (FOR 10, 15, 22, 33, 46, 66, 92, 125SV)**
- ❑ **STANDARD MOTOR**
- ❑ **CAN BE USED WITH THE HYDROVAR® CONTROL SYSTEM IN ORDER TO MANAGE THE OPERATION OF THE PUMP BASED ON THE SYSTEM CONDITIONS AND SAVE ENERGY**

SPECIFICATIONS

PUMP

The SV pump is a non-self priming vertical multistage pump coupled to a standard motor.
The liquid end, located between the upper cover and the pump casing, is held in place by tie rods. The pump casing is available with different configurations and connection types.

- Delivery: up to **160 m³/h**.
- Head: up to **280 m**.
- Temperature of pumped liquid:
  - from -30°C to +120°C for standard version.
- Maximum operating **pressure**:
  - 1, 3, 5, 10, 15, 22SV with oval flanges: 16 bar (PN16).
  - 1, 3, 5, 10, 15, 22SV with round flanges or Victaulic®, Clamp or DIN 11851 connections: 25 bar (PN 25).
  - 33, 46SV: 16, 25, 40 bar (PN 16, PN 25 or PN 40).
  - 66, 92, 125SV: 16 or 25 bar (PN 16 or PN 25).
- Tested in compliance with ISO 9906 - Annex A.
- Direction of rotation: clockwise looking at the pump from the top down (marked with an arrow on the adapter and on the coupling).

MOTOR

- Squirrel cage in short circuit, enclosed construction with external ventilation.
- **Standard supplied IE2/IE3 motors are compliant with Regulation (EC) no. 640/2009 and IEC 60034-30**.
- IP55 protection.
- Class 155 (F) insulation.
- Performances according to EN 60034-1.
- Standard voltage:
  - Single-phase version: 220-230 V, 60 Hz.
  - Three-phase version 2 pole: 220 V Δ, 380 V Y, 60 Hz up to 55 kW.

i-ALERT™

Patented i-ALERT™ monitor continuously measures vibration to support optimum performance.
Available **as standard** on pumps 7,5 kW (10 HP) and above.

CHARACTERISTICS OF 1, 3, 5, 10, 15, 22SV SERIES

- Vertical multistage centrifugal pump. All metal parts in contact with the pumped liquid are made of stainless steel.
- The following versions are available:
  - **F**: round flanges, in-line delivery and suction ports, AISI 304.
  - **T**: oval flanges, in-line delivery and suction ports, AISI 304.
  - **R**: round flanges, delivery port above the suction port, with four adjustable positions, AISI 304.
  - **N**: round flanges, in-line delivery and suction ports, AISI 316.
  - **V**, **P**: Victaulic® couplings, in-line delivery and suction ports, AISI 316.
  - **C**: Clamp couplings (DIN 32676), in-line delivery and suction ports, AISI 316.
  - **K**: threaded couplings, (DIN 11851), in-line delivery and suction ports, AISI 316.
- Reduced axial thrusts enable the use of **standard motors** that are easily found in the market. **Standard supplied IE2/IE3 three-phase surface motors ≥ 0,75 kW are compliant with Regulation (EC) no. 640/2009**.
- Mechanical seal according to EN 12756 (ex DIN 24960) and ISO 3069 for 1, 3, 5SV and 10, 15, 22SV (≤ of 4 kW) series.
- **Balanced mechanical seal** according to EN 12756 (ex DIN 24960) and ISO 3069, which **can be replaced without removing the motor from the pump** for 10, 15 and 22SV (≥ of 5,5 kW) series.
- Seal housing chamber designed to prevent the accumulation of air in the critical area next to the mechanical seal.
- A second plug is available for 10, 15, 22SV series.
- Versions with round flanges that can be coupled to counter-flanges, according to EN 1092.
- Threaded, oval counter-flanges made of stainless steel are standard supply for the T versions.
- Round counter-flanges made of stainless steel are available on request for the F, R and N versions.
- Easy maintenance. No special tools required for assembly or disassembly.
- **The pumps for F, T, R, N versions are certified for drinking water use (WRAS and ACS certified)**.
- Standard version for temperatures ranging from -30°C to +120°C.

CHARACTERISTICS OF 33, 46, 66, 92, 125SV SERIES

- The following versions are available:
  - **G**: vertical multistage centrifugal pump with impellers, diffusers and outer sleeve made entirely of stainless steel, and with pump casing and motor adaptor made of cast iron.
  - **N**, **P**: version made entirely of AISI 316 stainless steel.
- Innovative axial load compensation system on pumps with higher head. This ensures reduced axial thrusts and enables the use of **standard motors** that are easily found in the market. **Standard supplied IE2/IE3 three-phase surface motors are compliant with Regulation (EC) no. 640/2009**.
- **Balanced mechanical seal** according to EN 12756 (ex DIN 24960) and ISO 3069, which **can be replaced without removing the motor from the pump**.
- Seal housing chamber designed to prevent the accumulation of air in the critical area next to the mechanical seal.
- **The pumps for G, N versions are certified for drinking water use (WRAS and ACS certified)**.
- Standard version for temperatures ranging from -30°C to +120°C.
- Pump body fitted with couplings for installing pressure gauges on both suction and delivery flanges.
- In-line ports with round flanges that can be coupled to counter-flanges, in compliance with EN 1092.
- Mechanical sturdiness and easy maintenance. No special tools required for assembly or disassembly.

Inlet pressure of the pump plus static pressure of the water within the pump cannot exceed the nominal pressure (PN). Using different motors from those provided could limit inlet pressure.
In this event please contact customer services.

AVAILABLE ON REQUEST

Special versions are available to suit many applications. For details see page 54.

GENERAL CHARACTERISTICS
2-POLE SV

	1SV	3SV	5SV	10SV	15SV	22SV	33SV	46SV	66SV	92SV	125SV
Max efficiency flow (m^3/h)	2	3,6	7	12,4	21,8	24,5	40	50	87	108	144
Flow range (m^3/h)	0,8÷2,8	1,4÷5,2	3÷10	6÷17	10÷29	13÷34	18÷48	27÷72	36÷102	54÷144	60÷160
Maximum pressure (bar)	25	25	25	26	26	22	28	28	22	17	18
Motor power (kW)	0,37÷3	0,37÷4	0,55÷5,5	0,75÷11	1,5÷18,5	2,2÷18,5	3÷37	5.5÷45	7,5÷45	11÷45	15÷55
Max η (%) of pump	50	60	70	71	72	73	77	79	78	80	78
Standard temperature (°C)	-30 +120										

1-125sv_2p60_a_tg

1, 3, 5, 10, 15, 22SV VERSIONS

TYPE		2 POLES 1SV	3SV	5SV	10SV	15SV	22SV
F	AISI 304, PN25. In-line ports, round flanges	•	•	•	•	•	•
T	AISI 304, PN16. In-line ports, oval flanges	•	•	•	•	•	•
R	AISI 304, PN25. Discharge port above suction, round flanges	•	•	•	•	•	•
N	AISI 316, PN25. In-line ports, round flanges	•	•	•	•	•	•
V	AISI 316, PN25. Victaulic® couplings	•	•	•	•	•	•
P	AISI 316, PN40. Victaulic® couplings	•	•	•	•	•	•
C	AISI 316, PN25. Clamp couplings (DIN 32676)	•	•	•	•	•	•
K	AISI 316, PN25. Threaded couplings (DIN 11851)	•	•	•	•	•	•

• = Available. For P versions see specific catalogue.

1-22sv_2p50-en_b_tc

33, 46, 66, 92, 125SV VERSIONS

TYPE		2 POLES SV 33SV	46SV	66SV	92SV	125SV
G	CAST IRON PUMP CASING, LIQUID END MADE OF STAINLESS STEEL, IN-LINE ROUND FLANGES PN16, PN25 OR PN40 DEPENDING ON NUMBER OF STAGES AND MODEL.	•	•	•	•	•
N	ALL AISI 316 STAINLESS STEEL, IN-LINE ROUND FLANGES, PN16, PN25 OR PN40 DEPENDING ON NUMBER OF STAGES AND MODEL.	•	•	•	•	•
P	ALL AISI 316 STAINLESS STEEL. FLANGES,IN-LINE ROUND, PN40.	•	•	•	•	•

• = Available. For P versions see specific catalogue.

33-125sv_2p50-en_a_tc

VERSION DIAGRAM

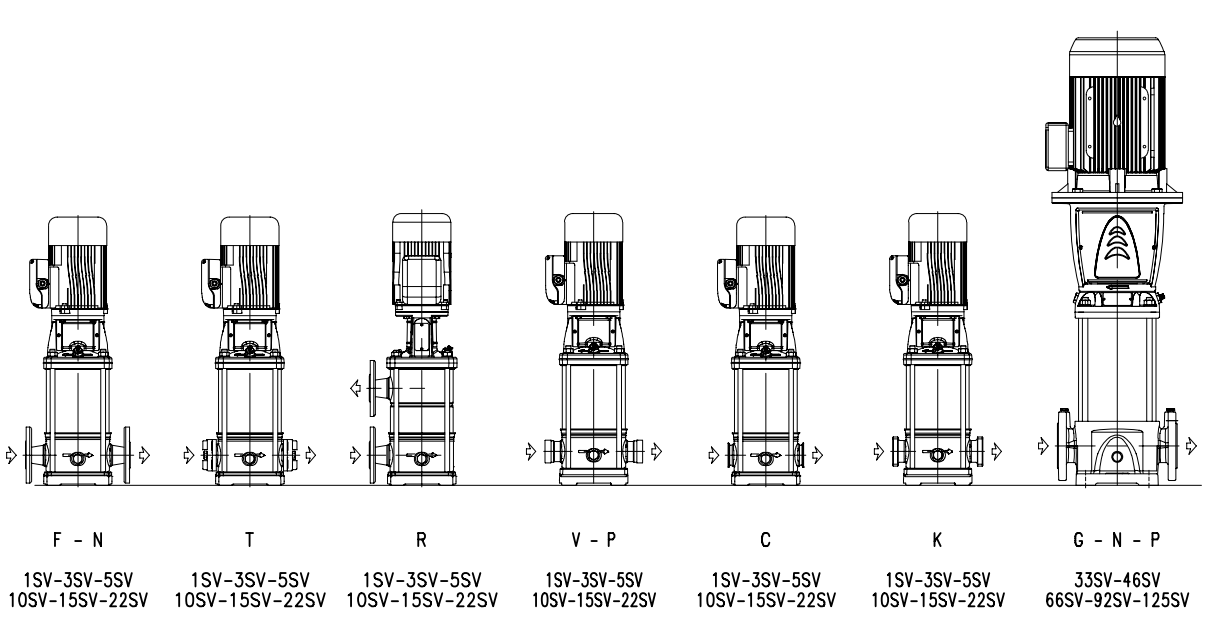

GOULDS WATER TECHNOLOGY
a xylem brand

IDENTIFICATION CODE

1, 3, 5, 10, 15, 22SV

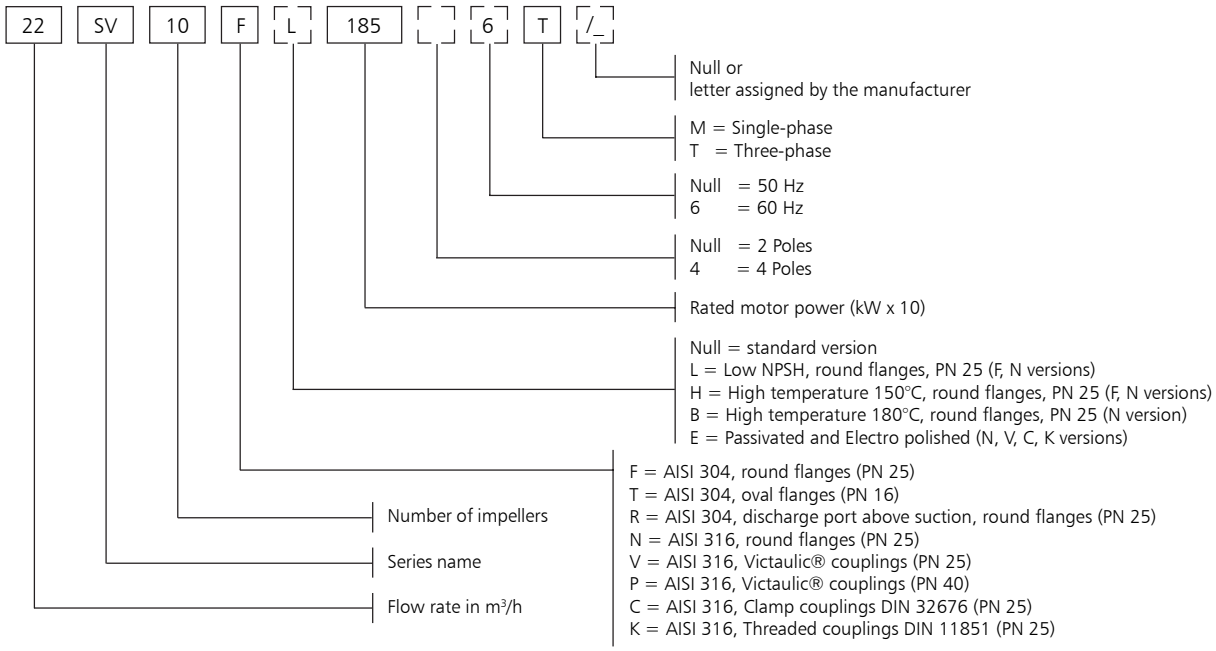

EXAMPLE: 22SV10F1856T
SV series electric pump, flow rate 22 m³/h, Number of impellers 10,
F version (AISI 304) round flanges, rated motor power 18,5 kW, 60 Hz frequency, three-phase.

33, 46, 66, 92, 125SV

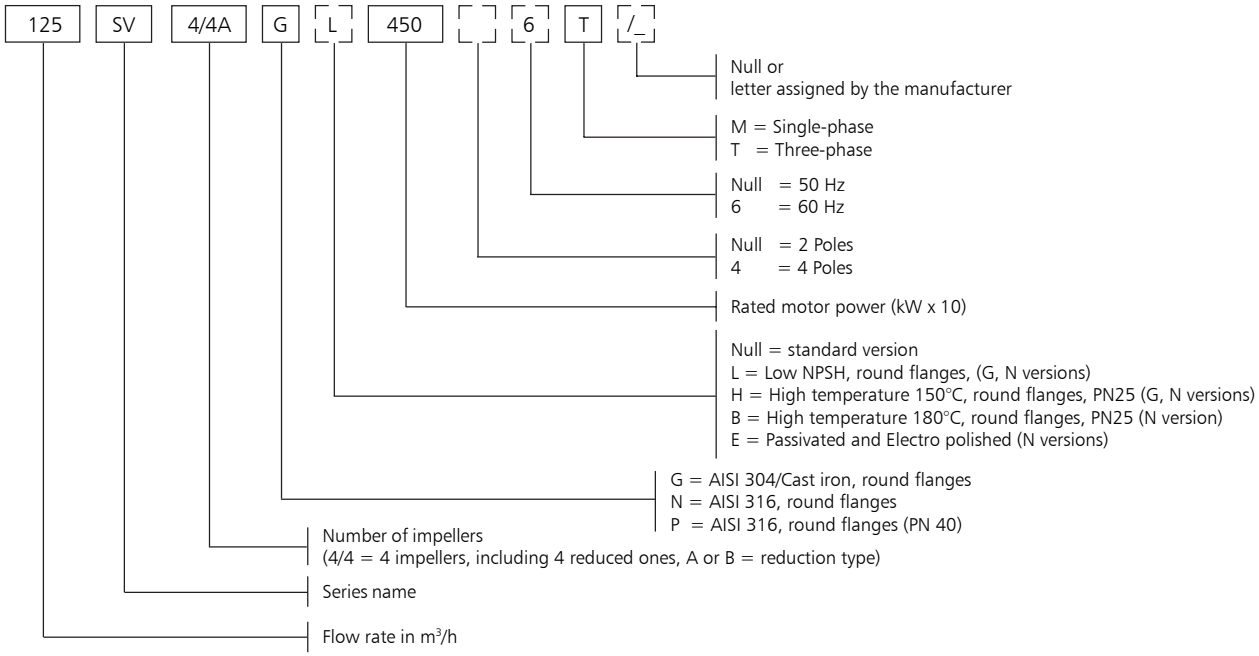

EXAMPLE: 125SV4/4AG4506T
SV series electric pump, flow rate 125 m³/h, Number of impellers 4, including 2 reduced ones, A reduction type
G version (AISI 304/Cast iron) round flanges, rated motor power 45 kW, 60 Hz frequency, three-phase.

RATING PLATE

1-22SV (ELECTRIC PUMP)

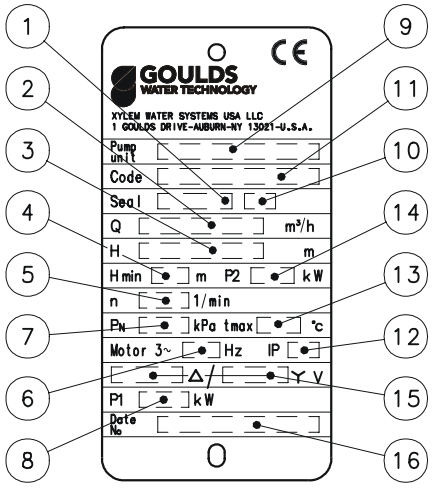

33-125SV (ELECTRIC PUMP)

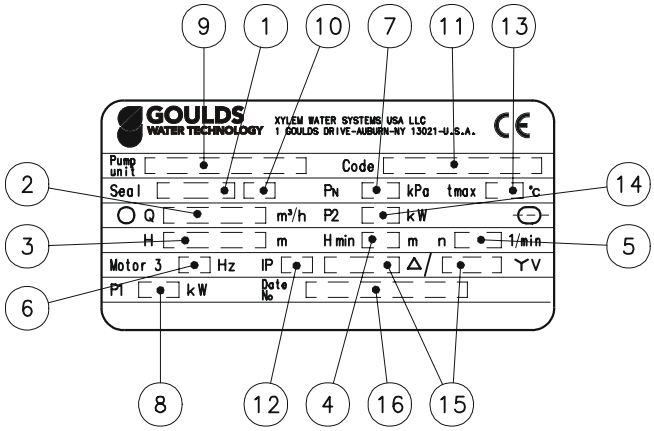

1-22SV (PUMP)

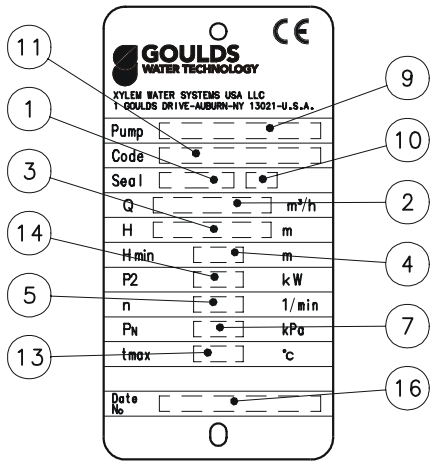

33-125SV (PUMP)

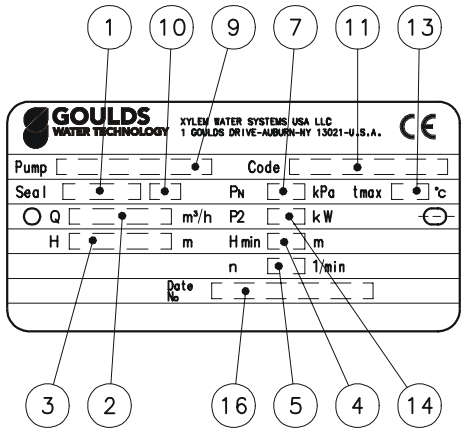

LEGEND

1 - Mechanical seal material identification code
2 - Flow range
3 - Head range
4 - Minimum head
5 - Speed
6 - Frequency
7 - Maximum operating pressure
8 - Electric pump unit absorbed power
9 - Pump / electric pump unit type
10 - O-ring material identification code
11 - Electric pump unit / pump code
12 - Protection class
13 - Maximum liquid temperature
14 - Motor nominal power
15 - Rated voltage
16 - Manufacturing date and serial number

1, 3, 5SV SERIES and 10, 15, 22SV SERIES ≤ 4 kW
ELECTRIC PUMP CROSS SECTION AND MAIN COMPONENTS

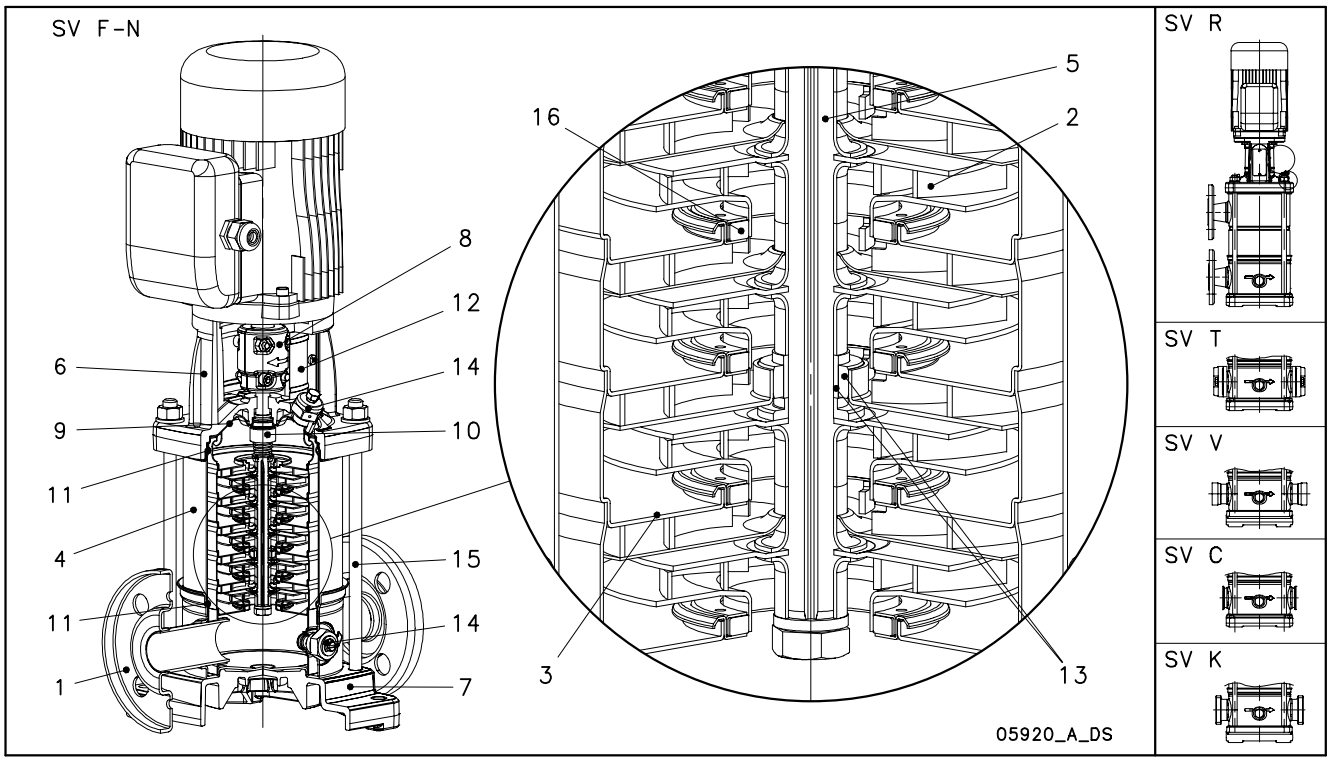

F, T, R VERSIONS

REF. N.	NAME	MATERIAL	REFERENCE STANDARDS	
			EUROPE	USA
1	Pump body	Stainless steel	EN 10088-1-X5CrNi18-10 (1.4301)	AISI 304
2	Impeller	Stainless steel	EN 10088-1-X5CrNi18-10 (1.4301)	AISI 304
3	Diffuser	Stainless steel	EN 10088-1-X5CrNi18-10 (1.4301)	AISI 304
4	Outer sleeve	Stainless steel	EN 10088-1-X5CrNi18-10 (1.4301)	AISI 304
5	Shaft	Stainless steel	EN 10088-1-X5CrNi18-10 (1.4301)	AISI 304
6	Adapter	Cast iron	EN 1561-GJL-250 (JL1040)	ASTM Class 35
7	Base	Aluminium	EN 1706-AC-AlSi11Cu2 (Fe) (AC46100)	-
8	Coupling	Aluminium	EN 1706-AC-AlSi11Cu2 (Fe) (AC46100)	-
9	Seal housing	Stainless steel	EN 10088-1-X5CrNi18-10 (1.4301)	AISI 304
10	Mechanical seal	Silicon carbide / Carbon / EPDM		
11	Elastomers	EPDM		
12	Coupling protection	Stainless steel	EN 10088-1-X5CrNi18-10 (1.4301)	AISI 304
13	Shaft sleeve and bushing	Tungsten carbide		
14	Fill / drain plugs	Stainless steel	EN 10088-1-X5CrNi18-10 (1.4301)	AISI 304
15	Tie rods	Galvanized steel	EN 10277-3-36SMnPb14 (1.0765)	
16	Wear ring	Technopolymer PPS		

1-22sv-ftr-en_a_tm

N, V, C, K VERSIONS

REF. N.	NAME	MATERIAL	REFERENCE STANDARDS	
			EUROPE	USA
1	Pump body	Stainless steel	EN 10088-1-X2CrNiMo17-12-2 (1.4404)	AISI 316L
2	Impeller	Stainless steel	EN 10088-1-X2CrNiMo17-12-2 (1.4404)	AISI 316L
3	Diffuser and upper spacer	Stainless steel	EN 10088-1-X2CrNiMo17-12-2 (1.4404)	AISI 316L
4	Outer sleeve	Stainless steel	EN 10088-1-X2CrNiMo17-12-2 (1.4404)	AISI 316L
5	Shaft	Stainless steel	EN 10088-1-X5CrNiMo17-12-2 (1.4401)	AISI 316
6	Adapter	Cast iron	EN 1561-GJL-250 (JL1040)	ASTM Class 35
7	Base	Aluminium	EN 1706-AC-AlSi11Cu2 (Fe) (AC46100)	-
8	Coupling	Aluminium	EN 1706-AC-AlSi11Cu2 (Fe) (AC46100)	-
9	Seal housing	Stainless steel	EN 10088-1-X2CrNiMo17-12-2 (1.4404)	AISI 316L
10	Mechanical seal	Silicon carbide / Carbon / EPDM		
11	Elastomers	EPDM		
12	Coupling protection	Stainless steel	EN 10088-1-X5CrNi18-10 (1.4301)	AISI 304
13	Shaft sleeve and bushing	Tungsten carbide		
14	Fill / drain plugs	Stainless steel	EN 10088-1-X5CrNiMo17-12-2 (1.4401)	AISI 316
15	Tie rods	Stainless steel	EN 10088-1-X17CrNi16-2 (1.4057)	AISI 431
16	Wear ring	Technopolymer PPS		

1-22sv-nvck-en_a_tm

10, 15, 22SV SERIES ≥ 5,5 kW
ELECTRIC PUMP CROSS SECTION AND MAIN COMPONENTS

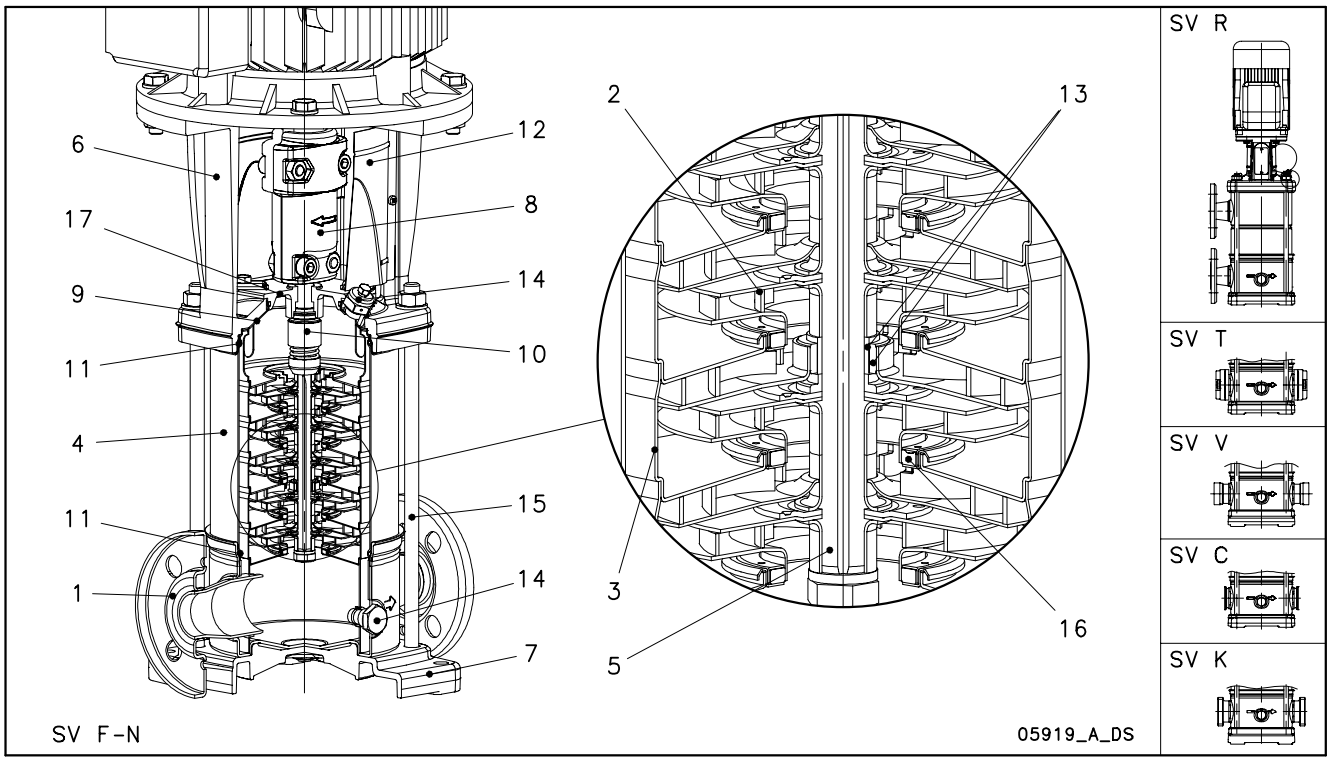

F, T, R VERSIONS

REF. N.	NAME	MATERIAL	REFERENCE STANDARDS EUROPE	USA
1	Pump body	Stainless steel	EN 10088-1-X5CrNi18-10 (1.4301)	AISI 304
2	Impeller	Stainless steel	EN 10088-1-X5CrNi18-10 (1.4301)	AISI 304
3	Diffuser	Stainless steel	EN 10088-1-X5CrNi18-10 (1.4301)	AISI 304
4	Outer sleeve	Stainless steel	EN 10088-1-X5CrNi18-10 (1.4301)	AISI 304
5	Shaft	Stainless steel	EN 10088-1-X5CrNi18-10 (1.4301)	AISI 304
6	Adapter	Cast iron	EN 1561-GJL-250 (JL1040)	ASTM Class 35
7	Base	Aluminium	EN 1706-AC-AlSi11Cu2 (Fe) (AC46100)	-
8	Coupling	Aluminium	EN 1706-AC-AlSi11Cu2 (Fe) (AC46100)	-
9	Seal plate	Stainless steel	EN 10088-1-X5CrNi18-10 (1.4301)	AISI 304
10	Mechanical seal	Silicon carbide / Carbon / EPDM		
11	Elastomers	EPDM		
12	Coupling protection	Stainless steel	EN 10088-1-X5CrNi18-10 (1.4301)	AISI 304
13	Shaft sleeve and bushing	Tungsten carbide		
14	Fill / drain plugs	Stainless steel	EN 10088-1-X5CrNi18-10 (1.4301)	AISI 304
15	Tie rods	Stainless steel	EN 10277-3-36SMnPb14 (1.0765)	
16	Wear ring	Technopolymer PPS		
17	Seal gland	Stainless steel	EN 10213-4-GX5CrNi19-10 (1.4308)	AISI 304

10-22sv-ftr-en_a_tm

N, V, C, K VERSIONS

REF. N.	NAME	MATERIAL	REFERENCE STANDARDS EUROPE	USA
1	Pump body	Stainless steel	EN 10088-1-X2CrNiMo17-12-2 (1.4404)	AISI 316L
2	Impeller	Stainless steel	EN 10088-1-X2CrNiMo17-12-2 (1.4404)	AISI 316L
3	Diffuser	Stainless steel	EN 10088-1-X2CrNiMo17-12-2 (1.4404)	AISI 316L
4	Outer sleeve	Stainless steel	EN 10088-1-X2CrNiMo17-12-2 (1.4404)	AISI 316L
5	Shaft	Stainless steel	EN 10088-1-X5CrNiMo17-12-2 (1.4401)	AISI 316
6	Adapter	Cast iron	EN 1561-GJL-250 (JL1040)	ASTM Class 35
7	Base	Aluminium	EN 1706-AC-AlSi11Cu2 (Fe) (AC46100)	-
8	Coupling	Aluminium	EN 1706-AC-AlSi11Cu2 (Fe) (AC46100)	-
9	Seal plate	Stainless steel	EN 10088-1-X2CrNiMo17-12-2 (1.4404)	AISI 316L
10	Mechanical seal	Silicon carbide / Carbon / EPDM		
11	Elastomers	EPDM		
12	Coupling protection	Stainless steel	EN 10088-1-X5CrNi18-10 (1.4301)	AISI 304
13	Shaft sleeve and bushing	Tungsten carbide		
14	Fill / drain plugs	Stainless steel	EN 10088-1-X5CrNiMo17-12-2 (1.4401)	AISI 316
15	Tie rods	Stainless steel	EN 10088-1-X17CrNi16-2 (1.4057)	AISI 431
16	Wear ring	Technopolymer PPS		
17	Seal gland	Stainless steel	EN 10213-4-GX5CrNiMo19-11-2 (1.4408)	AISI 316

10-22sv-nvck-en_a_tm

33, 46, 66, 92SV SERIES
ELECTRIC PUMP CROSS SECTION AND MAIN COMPONENTS

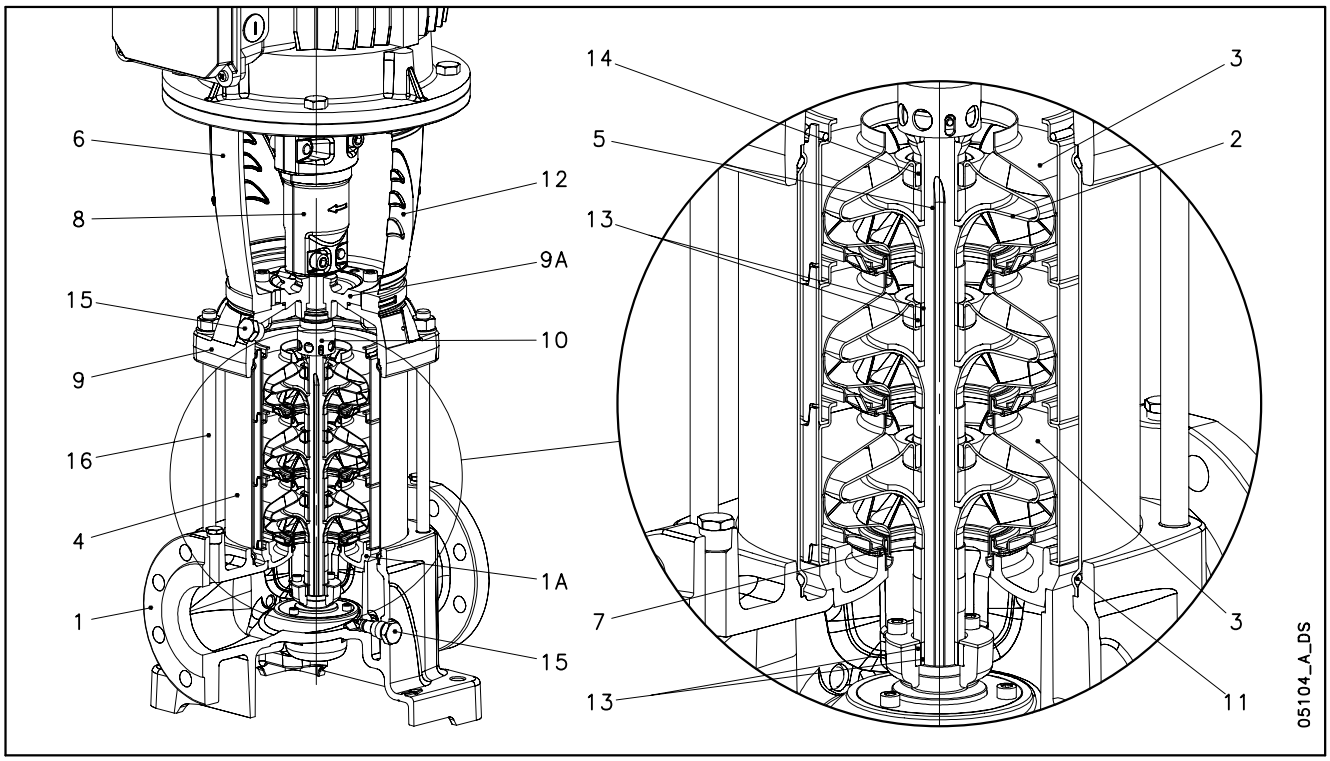

G VERSIONS

REF. N.	NAME	MATERIAL	REFERENCE STANDARDS	
			EUROPE	USA
1	Pump body	Cast iron	EN 1561-GJL-250 (JL1040)	ASTM Class 35
1A	Lower support	Cast iron	EN 1561-GJL-250 (JL1040)	ASTM Class 35
2	Impeller	Stainless steel	EN 10088-1-X2CrNiMo17-12-2 (1.4404)	AISI 316L
3	Diffuser	Stainless steel	EN 10088-1-X5CrNi18-10 (1.4301)	AISI 304
4	Outer sleeve	Stainless steel	EN 10088-1-X5CrNi18-10 (1.4301)	AISI 304
5	Shaft	Stainless steel	EN 10088-1 - X17CrNi16-2 (1.4057)	AISI 431
6	Adapter	Cast iron	EN 1561-GJL-200 (JL1030)	ASTM Class 25
7	Wear ring	Technopolymer PPS		
8	Coupling	Cast iron	EN 1561-GJL-200 (JL1030)	ASTM Class 25
9	Upper head	Cast iron	EN 1561-GJL-250 (JL1040)	ASTM Class 35
9A	Seal housing	Cast iron	EN 1561-GJL-250 (JL1040)	ASTM Class 35
10	Mechanical seal	Silicon carbide / Carbon / EPDM		
11	Elastomers	EPDM		
12	Coupling protection	Stainless steel	EN 10088-1-X5CrNi18-10 (1.4301)	AISI 304
13	Shaft sleeve and bushing	Tungsten carbide		
14	Bushing for diffuser	Carbon		
15	Fill / Drain plugs	Stainless steel	EN 10088-1-X5CrNiMo17-12-2 (1.4401)	AISI 316
16	Tie rods	Galvanized steel	EN 10277-3-36SMnPb14 (1.0765)	-

33-92sv-g-en_a_tm

N VERSIONS

REF. N.	NAME	MATERIAL	REFERENCE STANDARDS	
			EUROPE	USA
1	Pump body	Stainless steel	EN 10213-4-GX5CrNiMo19-11-2 (1.4408)	ASTM CF8M (AISI 316 cast)
1A	Lower support	Stainless steel	EN 10213-4-GX5CrNiMo19-11-2 (1.4408)	ASTM CF8M (AISI 316 cast)
2	Impeller	Stainless steel	EN 10088-1-X2CrNiMo17-12-2 (1.4404)	AISI 316L
3	Diffuser	Stainless steel	EN 10088-1-X2CrNiMo17-12-2 (1.4404)	AISI 316L
4	Outer sleeve	Stainless steel	EN 10088-1-X2CrNiMo17-12-2 (1.4404)	AISI 316L
5	Shaft	Duplex stainless steel	EN 10088-1-X2CrNiMoN22-5-3 (1.4462)	UNS S 31803
6	Adapter	Cast iron	EN 1561-GJL-200 (JL1030)	ASTM Class 25
7	Wear ring	Technopolymer PPS		
8	Coupling	Cast iron	EN 1561-GJL-200 (JL1030)	ASTM Class 25
9	Upper head	Stainless steel	EN 10213-4-GX5CrNiMo19-11-2 (1.4408)	ASTM CF8M (AISI 316 cast)
9A	Seal housing	Stainless steel	EN 10213-4-GX5CrNiMo19-11-2 (1.4408)	ASTM CF8M (AISI 316 cast)
10	Mechanical seal	Silicon carbide / Carbon / EPDM		
11	Elastomers	EPDM		
12	Coupling protection	Stainless steel	EN 10088-1-X5CrNi18-10 (1.4301)	AISI 304
13	Shaft sleeve and bushing	Tungsten carbide		
14	Bushing for diffuser	Carbon		
15	Fill / drain / air plugs	Stainless steel	EN 10088-1-X5CrNiMo17-12-2 (1.4401)	AISI 316
16	Tie rods	Stainless steel	EN 10088-1-X17CrNi16-2 (1.4057)	AISI 431

33-92sv-n-en_a_tm

GOULDS WATER TECHNOLOGY
a xylem brand

125SV SERIES
ELECTRIC PUMP CROSS SECTION AND MAIN COMPONENTS

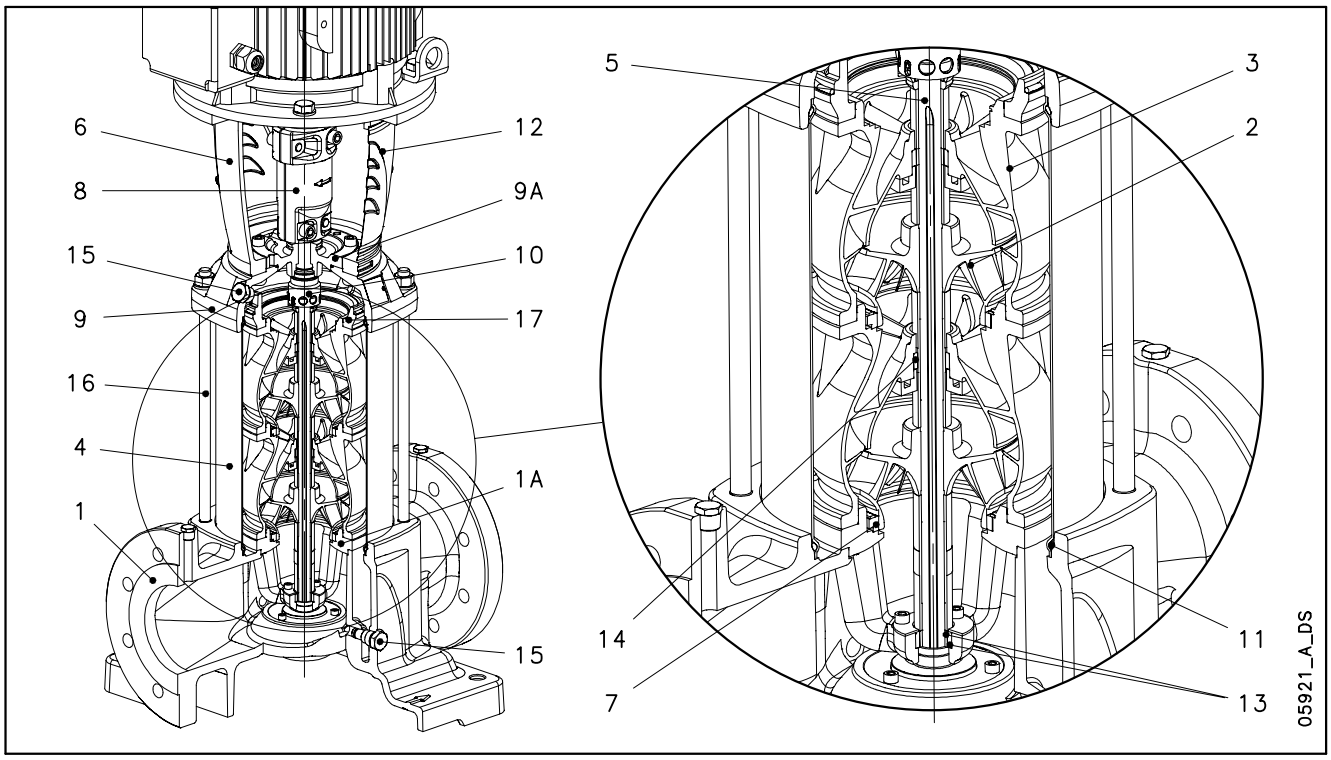

G VERSIONS

REF. N.	NAME	MATERIAL	REFERENCE STANDARDS	
			EUROPE	USA
1	Pump body	Cast iron	EN 1561-GJL-250 (JL1040)	ASTM Class 35
1A	Lower support	Stainless steel	EN 10213-GX5CrNi19-10 (1.4308)	AISI 304
2-3	Impeller, Diffuser	Stainless steel	EN 10213-GX5CrNi19-10 (1.4308)	AISI 304
4	Outer sleeve	Stainless steel	EN 10088-1-X5CrNi18-10 (1.4301)	AISI 304
5	Shaft	Stainless steel	EN 10088-1 - X17CrNi16-2 (1.4057)	AISI 431
6	Adapter (up to 45kW)	Cast iron	EN 1561-GJL-200 (JL1030)	ASTM Class 25
	Adapter (for higher powers)	Cast iron	EN 1563-GJS-500-7 (JS1050)	ASTM A 536 80-55-06
7	Wear ring	Technopolymer PPS		
8	Coupling (up to 45kW)	Cast iron	EN 1561-GJL-200 (JL1030)	ASTM Class 25
	Coupling (for higher powers)	Cast iron	EN 1563-GJS-500-7 (JS1050)	ASTM A 536 80-55-06
9-9A	Upper head, Seal housing	Cast iron	EN 1561-GJL-250 (JL1040)	ASTM Class 35
10	Mechanical seal	Silicon carbide / Carbon / EPDM		
11	Elastomers	EPDM		
12	Coupling protection	Stainless steel	EN 10088-1-X5CrNi18-10 (1.4301)	AISI 304
13	Shaft sleeve and bushing	Tungsten carbide		
14	Bushing for diffuser	Carbon		
15	Fill / drain / air plugs	Stainless steel	EN 10088-1-X5CrNiMo17-12-2 (1.4401)	AISI 316
16	Tie rods	Galvanized steel	EN 10277-3-36SMnPb14 (1.0765)	-
17	Adapter ring	Stainless steel	EN 10213-GX5CrNi19-10 (1.4308)	AISI 304

125sv-g-en_a_tm

N VERSIONS

REF. N.	NAME	MATERIAL	REFERENCE STANDARDS	
			EUROPE	USA
1	Pump body	Stainless steel	EN 10213-4-GX5CrNiMo19-11-2 (1.4408)	ASTM CF8M (AISI 316)
1A	Lower support	Stainless steel	EN 10213-4-GX5CrNiMo19-11-2 (1.4408)	ASTM CF8M (AISI 316)
2-3	Impeller, Diffuser	Stainless steel	EN 10213-4-GX5CrNiMo19-11-2 (1.4408)	ASTM CF8M (AISI 316)
4	Outer sleeve	Stainless steel	EN 10088-1-X2CrNiMo17-12-2 (1.4404)	AISI 316L
5	Shaft	Duplex stainless steel	EN 10088-1-X2CrNiMoN22-5-3 (1.4462)	UNS S 31803
6	Adapter	Cast iron	EN 1561-GJL-200 (JL1030)	ASTM Class 25
	Adapter	Cast iron	EN 1563-GJS-500-7 (JS1050)	
7	Wear ring	Technopolymer PPS		
8	Coupling	Cast iron	EN 1561-GJL-200 (JL1030)	ASTM Class 25
	Coupling	Cast iron	EN 1563-GJS-500-7 (JS1050)	
9-9A	Upper head, Seal housing	Stainless steel	EN 10213-4-GX5CrNiMo19-11-2 (1.4408)	ASTM CF8M (AISI 316)
10	Mechanical seal	Silicon carbide / Carbon / EPDM		
11	Elastomers	EPDM		
12	Coupling protection	Stainless steel	EN 10088-1-X5CrNi18-10 (1.4301)	AISI 304
13	Shaft sleeve and bushing	Tungsten carbide		
14	Bushing for diffuser	Carbon		
15	Fill / drain / air plugs	Stainless steel	EN 10088-1-X5CrNiMo17-12-2 (1.4401)	AISI 316
16	Tie rods	Stainless steel	EN 10088-1-X17CrNi16-2 (1.4057)	AISI 431
17	Adapter ring	Stainless steel	EN 10213-4-GX5CrNiMo19-11-2 (1.4408)	ASTM CF8M (AISI 316)

125sv-n-en_a_tm

e-SV™ SERIES
MECHANICAL SEALS, ACCORDING TO EN 12756

1, 3, 5SV
10, 15, 22SV ≤ 4 kW

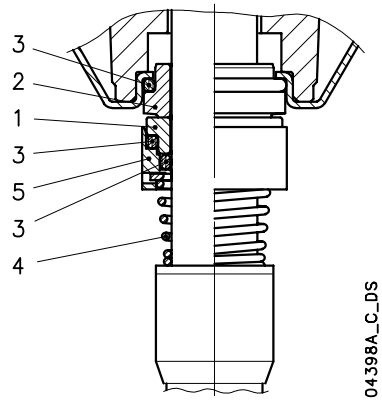

10, 15, 22SV ≥ 5,5 kW

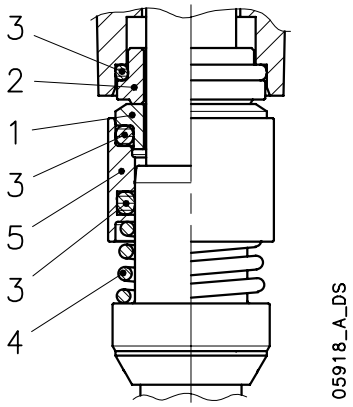

33, 46, 66, 92, 125SV

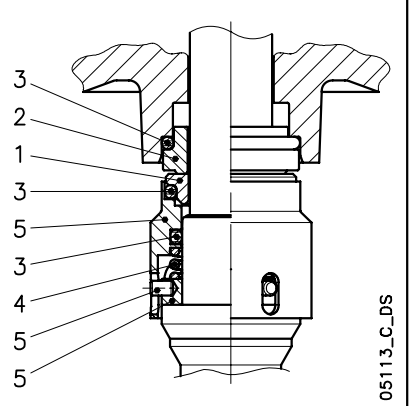

LIST OF MATERIALS

POSITION 1 - 2	POSITION 3	POSITION 4 - 5
Q_1 : Silicon Carbide	E : EPDM	G : AISI 316
B : Resin impregnated carbon	V : FPM	
C : Special resin impregnated carbon	T : PTFE	

TYPE OF SEAL

sv_ten-mec-en_a_tm

TYPE	POSITION 1 ROTATING PART	POSITION 2 STATIONARY PART	POSITION 3 ELASTOMERS	POSITION 4 SPRINGS	POSITION 5 OTHER COMPONENTS	TEMPERATURE (°C)
STANDARD MECHANICAL SEAL						
Q_1 B E G G	Q_1	B	E	G	G	-30 +120
OTHER TYPES OF AVAILABLE MECHANICAL SEAL						
Q_1 Q_1 E G G	Q_1	Q_1	E	G	G	-30 +120
Q_1 B V G G	Q_1	B	V	G	G	-10 +120
Q_1 Q_1 V G G	Q_1	Q_1	V	G	G	-10 +120
*Q_1 C T G G	Q_1	C	T	G	G	0 +120
*Q_1 Q_1 T G G	Q_1	Q_1	T	G	G	0 +120

* Versions with anti-rotation lock pin of the fixed part.

sv_tipi-ten-mec-en_b_tc

PRESSURE/TEMPERATURE APPLICATION LIMITS FOR COMPLETE PUMP (APPLICABLE WITH ANY OF THE SEALS LISTED ABOVE)

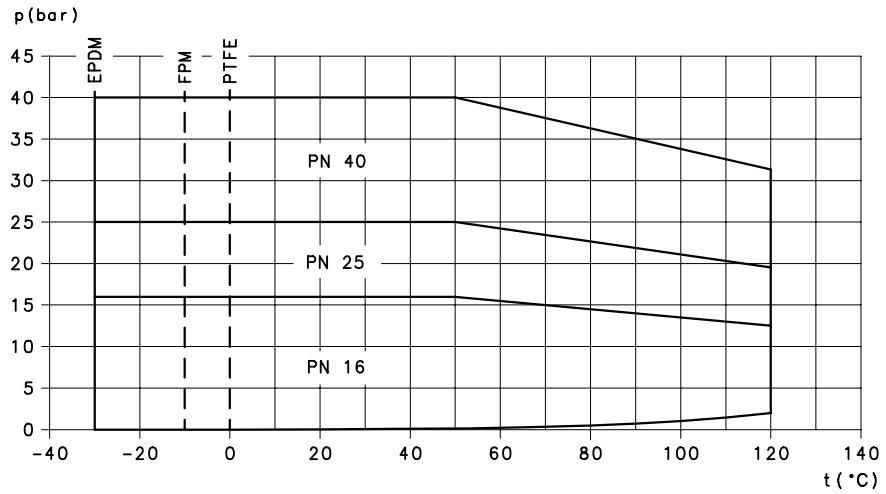

05917_C_SC

COMPATIBILITY CHART FOR MATERIALS IN CONTACT WITH MOST COMMONLY USED LIQUIDS

LIQUID	CONCENTRATION	TEMPERAT. MIN/MAX	SPECIF. WEIGHT	1, 3, 5, 10, 15, 22 SV VERSION		33, 46, 66, 92, 125 SV VERSION		RECOMMEND. SEAL	ELASTOM.
	(%)	(°C)	(Kg/dm^3)	Standard	N	Standard	N		
Acetic acid	80	-10 +70	1,05	•	•		•	Q_1BEGG	E
Alkaline degreaser	5	80		•	•	•	•	Q_1Q_1VGG	V
Aluminium sulfate	30	-5 +50	2,71		•		•	Q_1Q_1EGG	E
Ammonia in water	25	-20 +50	0,99	•	•		•	Q_1BEGG	E
Ammonium sulfate	10	-10 +60	1,77		•		•	Q_1Q_1EGG	E
Benzoic acid	70	0 +70	1,31	•	•		•	Q_1BVGG	V
Boric acid	saturated	-10 +90	1,43	•	•		•	Q_1Q_1VGG	V
Butyl alcohol	100	-5 +80	0,81	•	•	•	•	Q_1BVGG	V
Caustic soda	25	0 +70	2,13	•	•	•	•	Q_1Q_1EGG	E
Chloroform	100	-10 +30	1,48	•	•	•	•	Q_1BVGG	V
Citric acid	5	-10 +70	1,54	•	•		•	Q_1BEGG	E
Cleaning products	10	-5 +100		•	•	•	•	Q_1Q_1VGG	V
Copper sulfate	20	0 +30	2,28		•		•	Q_1Q_1VGG	V
Cutting fluid	100	-5 +110	0,90	•	•	•	•	Q_1BVGG	V
Deionised, demineralised water	100	-25 +110	1	•	•	•	•	Q_1BEGG	E
Denatured alcohol	100	-5 +70	0,81	•	•	•	•	Q_1BEGG	E
Diathermic oil	100	-5 +110	0,90	•	•	•	•	Q_1BVGG	V
Emulsion oil and water	any	-5 +90		•	•	•	•	Q_1BVGG	V
Ethyl alcohol	100	-5 +40	0,81	•	•	•	•	Q_1BEGG	E
Ethylene glycol	30	-30 +120			•		•	Q_1BEGG	E
Formaldehyde	100	0 +30	1,13	•	•	•	•	Q_1Q_1TGG	T
Formic acid	5	-15 +25	1,22	•	•		•	Q_1BEGG	E
Glycerine	100	+20 +90	1,26	•	•	•	•	Q_1BEGG	E
Hydraulic oil	100	-5 +110		•	•	•	•	Q_1BVGG	V
Hydrochloric acid	2	-5 +25	1,20		•		•	Q_1Q_1VGG	V
Hydroxide sodium	25	0 +70		•	•	•	•	Q_1Q_1EGG	E
Iron sulfate	10	-5 +30	2,09		•		•	Q_1BEGG	E
Methyl alcohol	100	-5 +40	0,79	•	•	•	•	Q_1BEGG	E
Mineral oil	100	-5 +110	0,94	•	•	•	•	Q_1BVGG	V
Nitric acid	50	-5 +30	1,48	•	•		•	Q_1Q_1VGG	V
Perchloroethylene	100	-10 +30	1,60	•	•	•	•	Q_1BVGG	V
Phosphates-polyphosphates	10	-5 +90			•		•	Q_1Q_1VGG	V
Phosphoric acid	10	-5 +30	1,33		•		•	Q_1BEGG	E
Propyl alcohol (Propanol)	100	-5 +80	0,80	•	•	•	•	Q_1BEGG	E
Propylene glycol	30	-30 +120		•	•	•	•	Q_1BEGG	E
Sodium bicarbonate (Baking soda)	saturated				•		•	Q_1BEGG	E
Sodium hypochlorite	1	-10 +25			•		•	Q_1Q_1VGG	V
Sodium nitrate	saturated	-10 +80	2,25	•	•	•	•	Q_1BEGG	E
Sodium sulfate	15	-10 +40	2,60	•	•	•	•	Q_1Q_1EGG	E
Sulphuric acid	2	-10 +25	1,84		•		•	Q_1BVGG	V
Tannic acid	20	0 +50			•		•	Q_1BEGG	E
Tartaric acid	50	-10 +25	1,76	•	•		•	Q_1Q_1VGG	V
Trichloroethylene	100	-10 +40	1,46	•	•	•	•	Q_1BVGG	V
Uric acid	80	-10 +80	1,89	•	•		•	Q_1BEGG	E
Vegetable oil	100	-5 +110	0,95	•	•	•	•	Q_1BEGG	E
Water	100	-5 +120		•	•	•	•	Q_1BEGG	E
Water condensate	100	-5 +100	1	•	•	•	•	Q_1BEGG	E
Water detergents, mineral oils mixture	10	-5 +80		•	•	•	•	Q_1Q_1VGG	V

tab-comp-sv-en_b_tm

The above table indicates the compatibility of materials depending on the pumped liquid.
Check the specific weight of the liquid or the viscosity as this could affect the power input of the motor and hydraulic performance. For further details, please contact the sales network.

e-SV™ SERIES MOTORS

Standard supplied SV electric pumps are equipped with Standard motors.

- **Standard supplied IE2/IE3 three-phase surface motors ≥ 0,75 kW are compliant with Regulation (EC) no. 640/2009 and IEC 60034-30**.
- Short-circuit squirrel-cage motor (TEFC), enclosed construction with external ventilation.
- IP55 protection.
- Class 155 (F) insulation.
- Performance according to EN 60034-1.
- Standard voltage.
- Cable gland with standard passage dimensions according to EN 50262 (metric thread).
- **Single-phase** version: 220-230 V 60 Hz with built-in automatic reset overload protection up to 1,5 kW.
  For higher powers the protection must be provided by the user.
- **Three-phase** version 2 pole:
  220 V Δ, 380 V Y, 60 Hz up to 55 kW.
  Overload protection to be provided by the user.

SINGLE-PHASE MOTORS AT 60 Hz, 2 POLES

P_N kW	MOTOR TYPE	IEC SIZE*	Construction Design	INPUT CURRENT In (A) 220-230 V	CAPACITOR µF	CAPACITOR V	DATA FOR 220 V 60 Hz VOLTAGE min^{-1}	Is / In	η %	cosφ	Tn Nm	Ts/Tn	Tm/Tn
0,4	SM71RB14/1046	71R	V18/B14	2,86-2,94	14	450	3385	3,80	67,5	0,94	1,13	0,73	2,04
0,55	SM71B14/1056	71		3,68-3,62	16	450	3400	4,28	70,2	0,97	1,54	0,66	2,11
0,75	SM80RB14/1076	80R		4,98-4,88	20	450	3380	3,90	69,8	0,98	2,12	0,64	1,91
1,1	SM80B14/1116	80		6,94-6,89	30	450	3435	4,54	74,2	0,97	3,06	0,62	2,03
1,5	SM90RB14/1156	90R		9,28-9,35	40	450	3455	4,91	76,3	0,96	4,14	0,49	2,19
2,2	PLM90B14/1226	90		12,3-11,7	60	450	3455	4,99	83,4	0,98	6,08	0,54	2,06

* R =Reduced size of motor casing as compared to shaft extension and flange.

1-22sv-motm-2p60_en_d_te

GOULDS WATER TECHNOLOGY
a xylem brand

e-SV™ SERIES
THREE-PHASE MOTORS AT 60 Hz, 2 POLES (up to 22 kW)

P_N kW	Efficiency η_N %												IE	Year of construction
	Δ 220 V Y 380 V			Δ 230 V Y 400 V			Δ 380 V Y 660 V			Δ 400 V Y 690 V				
	4/4	3/4	2/4	4/4	3/4	2/4	4/4	3/4	2/4	4/4	3/4	2/4		
0,4	-	-	-	-	-	-	-	-	-	-	-	-	-	By June 2011
0,55	-	-	-	-	-	-	-	-	-	-	-	-	-	
0,75	83,4	82,4	79,0	83,4	82,4	79,0	83,4	82,4	79,0	83,4	82,4	79,0	3	
1,1	85,6	85,0	82,1	85,6	85,0	82,1	85,6	85,0	82,1	85,6	85,0	82,1		
1,5	87,2	87,0	84,6	87,2	87,0	84,6	87,2	87,0	84,6	87,2	87,0	84,6		
2,2	85,5	85,5	84,5	85,5	85,5	84,5	85,5	85,5	84,5	85,5	85,5	84,5	2	
3	87,8	88,0	86,0	87,8	88,0	86,0	87,8	88,0	86,0	87,8	88,0	86,0		
4	87,5	87,5	86,8	87,5	87,5	86,8	87,5	87,5	86,8	87,5	87,5	86,8		
5,5	88,5	88,5	88,5	88,5	88,5	88,5	88,5	88,5	88,5	88,5	88,5	88,5		
7,5	89,5	89,5	88,5	89,5	89,5	88,5	89,5	89,5	88,5	89,5	89,5	88,5		
11	90,2	90,2	89,7	90,2	90,2	89,7	90,2	90,2	89,7	90,2	90,2	89,7		
15	90,2	90,2	90,2	90,2	90,2	90,2	90,2	90,2	90,2	90,2	90,2	90,2		
18,5	91,0	91,0	91,0	91,0	91,0	91,0	91,0	91,0	91,0	91,0	91,0	91,0		
22	91,0	91,0	91,0	91,0	91,0	91,0	91,0	91,0	91,0	91,0	91,0	91,0		

P_N kW	Manufacturer: XYLEM WATER SYSTEMS USA LLC, 1 Goulds Drive - Auburn, NY 13021 – U.S.A. / Model	IEC SIZE*	Construction Design	N. of Poles	f_N Hz	Data for 380 V / 60 Hz				
						cosφ	Is / I_N	TN Nm	Ts/T_N	Tm/Tn
0,4	SM071RB14/304	71R	V18/B14	2	60	0,81	4,76	1,16	3,48	2,15
0,55	SM071B14/305	71				0,84	5,83	1,55	3,09	2,77
0,75	SM080B14/307PE	80				0,79	8,25	2,05	3,80	4,02
1,1	SM080B14/311PE	80				0,80	9,11	3,01	4,15	4,29
1,5	SM090RB14/315PE	90R				0,82	9,79	4,10	4,36	4,37
2,2	PLM090B14/322	90				0,83	9,59	6,00	3,80	4,02
3	PLM100RB14/330	100R				0,84	9,12	8,22	3,52	3,65
4	PLM112RB14/340	112R				0,87	10,0	10,87	2,82	4,58
5,5	PLM132RB5/355	132R	V1/B5			0,89	11,4	14,97	4,28	5,80
7,5	PLM132B5/375	132				0,88	9,83	20,29	3,21	4,68
11	PLM160RB5/3110	160R				0,88	10,2	29,81	3,43	4,51
15	PLM160B5/3150	160				0,91	8,60	40,41	2,24	3,84
18,5	PLM160B5/3185	160				0,89	9,97	49,72	2,78	4,59
22	PLM180RB5/3220	180R				0,91	9,64	59,15	2,76	4,25

P_N kW	Voltage U_N V: Δ 220 V	Δ 230 V	Y 380 V	Y 400 V	Δ 380 V	Δ 400 V	Y 660 V	Y 690 V	n_N min^{-1}	Observe the regulations and codes locally in force regarding sorted waste disposal.	Operating conditions **: Altitude above sea Level (m)	T. amb min/max °C	ATEX
	I_N (A)												
0,4	1,96	1,89	1,13	1,09	-	-	-	-	3280 ÷ 3335		≤ 1000	-15 / 40	No
0,55	2,37	2,30	1,37	1,33	-	-	-	-	3380 ÷ 3415				
0,75	3,03	3,01	1,75	1,74	1,75	1,74	1,01	1,00	3490 ÷ 3500				
1,1	4,24	4,24	2,45	2,45	2,44	2,43	1,41	1,40	3490 ÷ 3505				
1,5	5,58	5,53	3,22	3,19	3,23	3,22	1,86	1,86	3485 ÷ 3505				
2,2	8,14	8,12	4,70	4,69	4,69	4,68	2,71	2,70	3495 ÷ 3505				
3	10,7	10,5	6,19	6,06	6,20	6,11	3,58	3,53	3480 ÷ 3495				
4	13,5	13,5	7,82	7,77	7,84	7,77	4,52	4,49	3510 ÷ 3520				
5,5	18,2	18,1	10,5	10,4	10,5	10,4	6,07	6,02	3505 ÷ 3515				
7,5	25,2	24,7	14,6	14,3	14,6	14,1	8,40	8,16	3525 ÷ 3535				
11	36,1	35,2	20,8	20,3	21,1	20,7	12,2	12,0	3520 ÷ 3540				
15	47,1	45,6	27,2	26,4	27,3	26,3	15,8	15,2	3545 ÷ 3550				
18,5	59,2	58,2	34,2	33,6	34,3	33,6	19,8	19,4	3550 ÷ 3555				
22	69,1	67,4	39,9	38,9	39,8	38,2	23,0	22,0	3545 ÷ 3555				

* R =Reduced size of motor casing as compared to shaft extension and flange.

sv-ie2-mott22G-2p60_c_te

** Operating conditions to be referred to motor only. About electric pump, refer to limits in user's manual.

e-SV™ SERIES
THREE-PHASE MOTORS AT 60 Hz, 2 POLES (from 30 to 55 kW)

P_N kW	Efficiency η_N % Δ 220 V Y 380 V 4/4	3/4	2/4	IE	Year of construction
30	92,4	92,4	91,5	2	By June 2011
37	92,4	92,4	92,0		
45	93,5	93,0	91,8		
55	93,5	93,5	92,8		

P_N kW	Manufacturer: WEG Equipamentos Eletricos S.A. Reg. No. 07.175.725/0010-50 Jaragua do Sul - SC (Brazil) Model	IEC SIZE	Construction Design	N. of Poles	f_N Hz	Data for 380 V / 60 Hz cosφ	Is / I_N	TN Nm	Ts/T_N	Tm/Tn
30	W22 200L2-B5 30kW	200	V1/B5	2	60	0,86	6,40	80,65	2,10	2,40
37	W22 200L2-B5 37kW	200				0,86	7,20	98,98	2,40	2,60
45	W22 225S/M2-B5 45kW	225				0,89	7,80	120,5	2,20	2,90
55	W22 250S/M2-B5 55kW	250				0,89	7,70	147,0	2,20	2,80

P_N kW	Voltage U_N V Δ 220 V Y 380 V I_N (A)		n_N min^{-1}	See note.	Operating conditions ** Altitude above sea Level (m)	T. amb min/max °C	ATEX
30	99,0	57,3	3550		≤1000	-15 / 40	No
37	122,0	70,7	3555				
45	142,0	82,2	3560				
55	173,0	100,0	3560				

** Operating conditions to be referred to motor only. About electric pump, refer to limits in user's manual.

sv-ie2-mott55-2p60_a_te

Note: Observe the regulations and codes locally in force regarding sorted waste disposal.

MOTOR NOISE 2 POLES 60 Hz

POWER kW	MOTOR TYPE IEC SIZE*	NOISE LpA dB
0,37	71R	<70
0,55	71	<70
0,75	80-80R	<70
1,1	80	<70
1,5	90-90R	<70
2,2	90	<70
3	100R	<70
4	112R	<70
5,5	132R	<70
7,5	132	76
11	160R	77
15	160	74
18,5	160	75
22	180R	73
30	200	74
37	200	74
45	225	79
55	250	79

*R = Reduced motor casing size with respect to shaft extension and related flange.

1-125sv_mott_2p60_c_tr

The table show the mean sound pressure (Lp) measured as per Curve A (Standard ISO 1680).
Noise values were measured with the 60 Hz motor running idle with a tolerance of 3 dB (A).

GOULDS WATER TECHNOLOGY
a xylem brand

AVAILABLE VOLTAGES
MOTORS FOR e-SV™ SERIES (up to 22 kW)

P_N kW	IEC SIZE	SINGLE-PHASE 50 Hz 1 x 220-240	1 x 100	1 x 110-120	60 Hz 1 x 220-230	1 x 100	1x 110-115	1 x 120-127	1 x 200-210
0,4	63	s	o	o	s	-	o	-	-
0,55	71	s	o	o	s	o	o	o	o
0,75	71	s	o	o	s	o	o	o	o
1,1	80	s	-	o	s	-	o	-	o
1,5	80	s	-	-	s	-	o	-	o
2,2	90	s	-	-	s	-	-	-	-

P_N kW	THREE-PHASE - 2 POLES 50 Hz 3 x 220-230-240/380-400-415	3 x 380-400-415/660-690	3 x 200-208/346-360	3 x 255-265/440-460	3 x 290-300/500-525	3 x 440-460/-	3 x 500-525/-	60 Hz 3 x 220-230/380-400	3 x 255-265-277/440-460-480	3 x 380-400/660-690	3 x 440-460-480/-	3 x 110-115/190-200	3 x 200-208/346-360	3 x 330-346/575-600	3 x 575/-	50/60 Hz 3 x 230/400 50 Hz 3 x 265/460 60 Hz	3 x 400/690 50 Hz 3 x 460/- 60 Hz
0,37	s	o	o	o	o	o	o	s	o	o	o	o	o	o	o	o	o
0,55	s	o	o	o	o	o	o	s	o	o	o	o	o	o	o	o	o
0,75	s	o	o	o	o	o	o	s	o	o	o	o	o	o	o	o	o
1,1	s	o	o	o	o	o	o	s	o	o	o	o	o	o	o	o	o
1,5	s	o	o	o	o	o	o	s	o	o	o	o	o	o	o	o	o
2,2	s	o	o	o	o	o	o	s	o	o	o	o	o	o	o	o	o
3	s	o	o	o	o	o	o	s	o	o	o	o	o	o	o	o	o
4	o	s	o	o	o	o	o	s	o	o	o	o	o	o	o	o	o
5,5	o	s	o	o	o	o	o	s	o	o	o	o	o	o	o	o	o
7,5	o	s	o	o	o	o	o	s	o	o	o	o	o	o	o	o	o
11	o	s	o	o	o	o	o	s	o	o	o	o	o	o	o	o	o
15	o	s	o	o	o	o	o	s	o	o	o	o	o	o	o	o	o
18,5	o	s	o	o	o	o	o	s	o	o	o	o	o	o	o	o	o
22	o	s	o	o	o	o	o	s	o	o	o	o	o	o	o	o	o

s = Standard voltage o = Optional voltage - = Not available sv-volt-lowa-en_a_te

MOTORS FOR e-SV™ SERIES (≥ 30 kW)

PN kW	THREE-PHASE - 2 POLES 50 Hz 3 x 220-230-240/380-400-415	3 x 380-400-415/660-690	3 x 110/190	3 x 200-208/346-360	3 x 255-265/440-460	3 x 290-300/500-525	3 x 440-460/-	3 x 500-525/-	60 Hz 3 x 230/380	3 x 380-400/660-690	3 x 440-480/-	3 x 110-115/190-200	3 x 200-208/346-360	3 x 255-265-277/440-460-480	3 x 330-346/575-600	3 x 575/-	50/60 Hz 3 x 230/400 50 Hz 3 x 265/460 60 Hz	3 x 400/690 50 Hz 3 x 460/- 60 Hz
30	o	s	o	o	o	o	o	o	s	o	o	o	o	o	o	o	o	o
37	o	s	o	o	o	o	o	o	s	o	o	o	o	o	o	o	o	o
45	o	s	o	o	o	o	o	o	s	o	o	o	o	o	o	o	o	o
55	o	s	o	o	o	o	o	o	s	o	o	o	o	o	o	o	o	o

s = Standard voltage o = Optional voltage - = Not available sv-volt-weg-en_b_te

SVH SERIES ELECTRIC PUMPS WITH HYDROVAR® CONTROL SYSTEM

The Goulds SV electric pumps are available in the SVH version, i.e. coupled to Hydrovar®, the microprocessor based control unit designed to manage the performance of the pump based on the conditions and requirements of the system. The basic SV electric pump is thus transformed into a complete pumping system suitable for a number of applications, including:

- Variable speed pressure boosting (constant pressure is maintained in industrial, civil and agricultural applications).
- Water filtration and treatment (constant flow is maintained based on flow resistance).
- Air conditioning and heating (constant differential pressure is maintained in a closed circuit).

- **No special pumps or motors**:
  HYDROVAR© is mounted directly onto a standard three-phase TEFC motor with class F insulation up to 22 kW power. A wall-mounted version is available for higher powers, up to 45 kW.

- **No extra pressure sensors**:
  HYDROVAR© is equipped with a pressure transmitter or differential pressure transmitter, depending on the applications.

- **No separate microprocessors**:
  In multiple-pump systems the microprocessor regulates the sequential operation of the pumps or motors. Since HYDROVAR© features a built-in microprocessor, no other control devices are required.

- **No separate control panels or converters**:
  HYDROVAR© performs all the functions of a pump control panel, incorporating protections against overload, short circuit, high temperature, etc. The only external device required is a fuse on the power supply line. Will depend upon any local electrical installation regulations.

- **No by-pass lines or safety systems**:
  With HYDROVAR© the pump switches off immediately when demand is zero or exceeds the maximum capacity of the pump. This way there is no need to install additional safety devices.

- **No large diaphragm tanks are required**:
  Without a large pressure tank on the discharge side of the pump, a constant speed pump running at maximum power will be constantly switching on and off in order to satisfy system demands.

With the HYDROVAR© system the speed of each pump varies in order to maintain a constant pressure or flow. A small tank is sufficient to maintain system pressure and to ensure immediate shut off at zero demand, therefore there is no need to install a large tank. Where local regulations allow it, the HYDROVAR© systems can be connected directly to the water supply line.

The pump's operation at the correct speed based on system requirements enables energy consumption to be substantially reduced.

- **Anti-condensation heater**
  All the units are equipped with anti-condensation heaters that switch on when the pump is in standby mode to prevent condensation inside the unit.

OPERATING PRINCIPLE

The basic function of the HYDROVAR® device is to control the pump to meet the system demands.

HYDROVAR® performs these functions by:

1) Measuring the system pressure or flow via a transmitter mounted on the pump's delivery side.
2) Calculating the motor speed to maintain the correct flow or pressure.
3) Sending out a signal to the pump to start the motor, increase speed, decrease speed or stop.
4) In the case of multiple pump installations, HYDROVAR® will automatically provide for the cyclic changeover of the pump's starting sequence.

In addition to these basic functions, HYDROVAR® can do things only by the most advanced computerised control systems, such as:

- Stop the pump(s) at zero demand.
- Stop the pump(s) in case of water failure on the suction side (protection against dry running).
- Stop the pump if the required delivery exceeds the pump's capacity (protection against cavitation caused by excessive demand), or automatically switch on the next pump in a multiple series.
- Protect the pump and motor from overvoltage, undervoltage, overload and earth fault.
- Vary the pump speed acceleration and deceleration time.
- Compensate for increased flow resistance at high flow rates.
- Conduct automatic test starts at set intervals.
- Monitor the converter and motor operating hours.
- Display all functions on an LCD in different languages (Italian, English, French, German, Spanish, Portuguese, Dutch).
- Send a signal to a remote control system which is proportional to the pressure and frequency.
- Communicate with another HYDROVAR® or control system via an RS 485 interface.

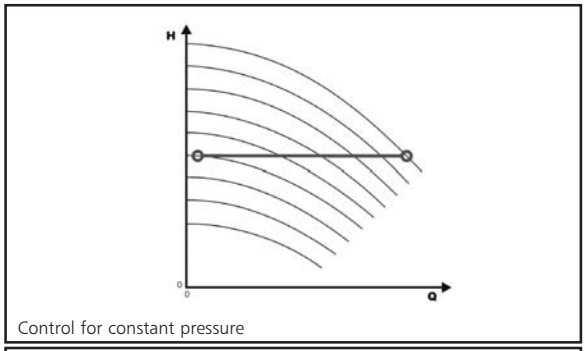

Control for constant pressure

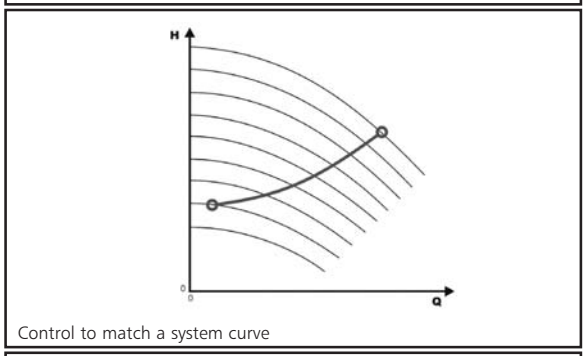

Control to match a system curve

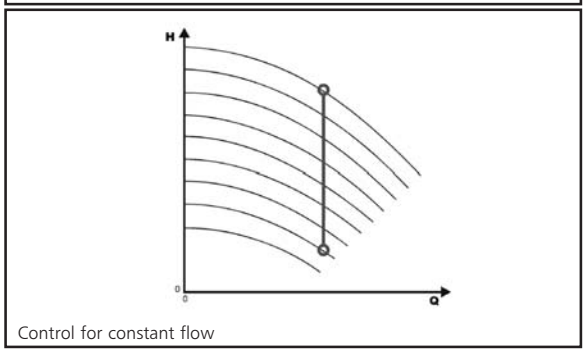

Control for constant flow

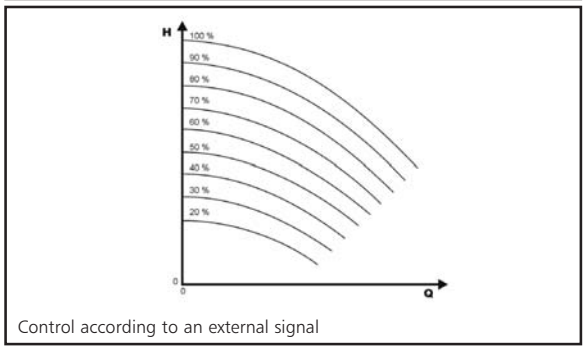

Control according to an external signal

TYPICAL EXAMPLE OF ENERGY SAVINGS

System: 22SV07F75T vertical multistage electric pump with 7,5 kW motor equipped with HYDROVAR®, 70 m head. 19 hour/day operation.
Application: maintaining a constant pressure as the flow rate varies.

FLOW	ABSORBED POWER		POWER SAVED	OPERATING TIME	TOTAL ENERGY SAVINGS
	CONSTANT SPEED PUMP	VARIABLE SPEED PUMP			
m^3/h	kW	kW	kW	(hours)	kWh
24	7,4	7,4	0,0	876	-
21	6,9	6,1	0,8	876	701
18	6,5	5,0	1,5	1752	2.628
14	5,6	3,8	1,8	1752	3.154
10	5,1	2,8	2,3	1752	4.030
YEARLY ENERGY SAVINGS (kWh)					10.512

sv-hydr-en_a_te

TYPICAL APPLICATIONS OF e-SV™ SERIES ELECTRIC PUMPS

WATER SUPPLY AND PRESSURE BOOSTING

- Pressure boosting in building, hotel, residential complexes.
- Pressure booster stations, supply of water networks.
- Booster packages.

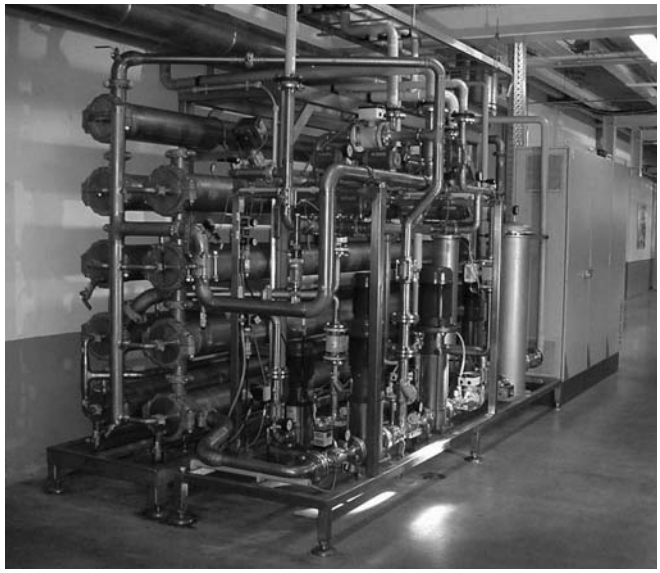

WATER TREATMENT

- Ultrafiltration systems.
- Reverse osmosis systems.
- Water softeners and de-mineralization.
- Distillation systems.
- Filtration.

LIGHT INDUSTRY

- Washing and cleaning plants (washing and degreasing of mechanical parts, car and truck wash tunnels, washing of electronic industry circuits).
- Commercial washers.
- Firefighting system pumps.

PHARMACEUTICAL AND FOOD & BEVERAGE INDUSTRIES

- Production plant where specific sanitary standards are required.

IRRIGATION AND AGRICULTURE

- Greenhouses.
- Humidifiers.
- Sprinkler irrigation.

HEATING, VENTILATION AND AIR CONDITIONING (HVAC)

- Cooling towers and systems.
- Temperature control systems.
- Refrigerators.
- Induction heating.
- Heat exchangers.
- Boilers, water recirculation and heating.

GOULDS WATER TECHNOLOGY
a xylem brand

e-SV™ SERIES
HYDRAULIC PERFORMANCE RANGE AT 60 Hz, 2 POLES

e-SV™	~ 3500 [rpm]	ISO 9906 - Annex A

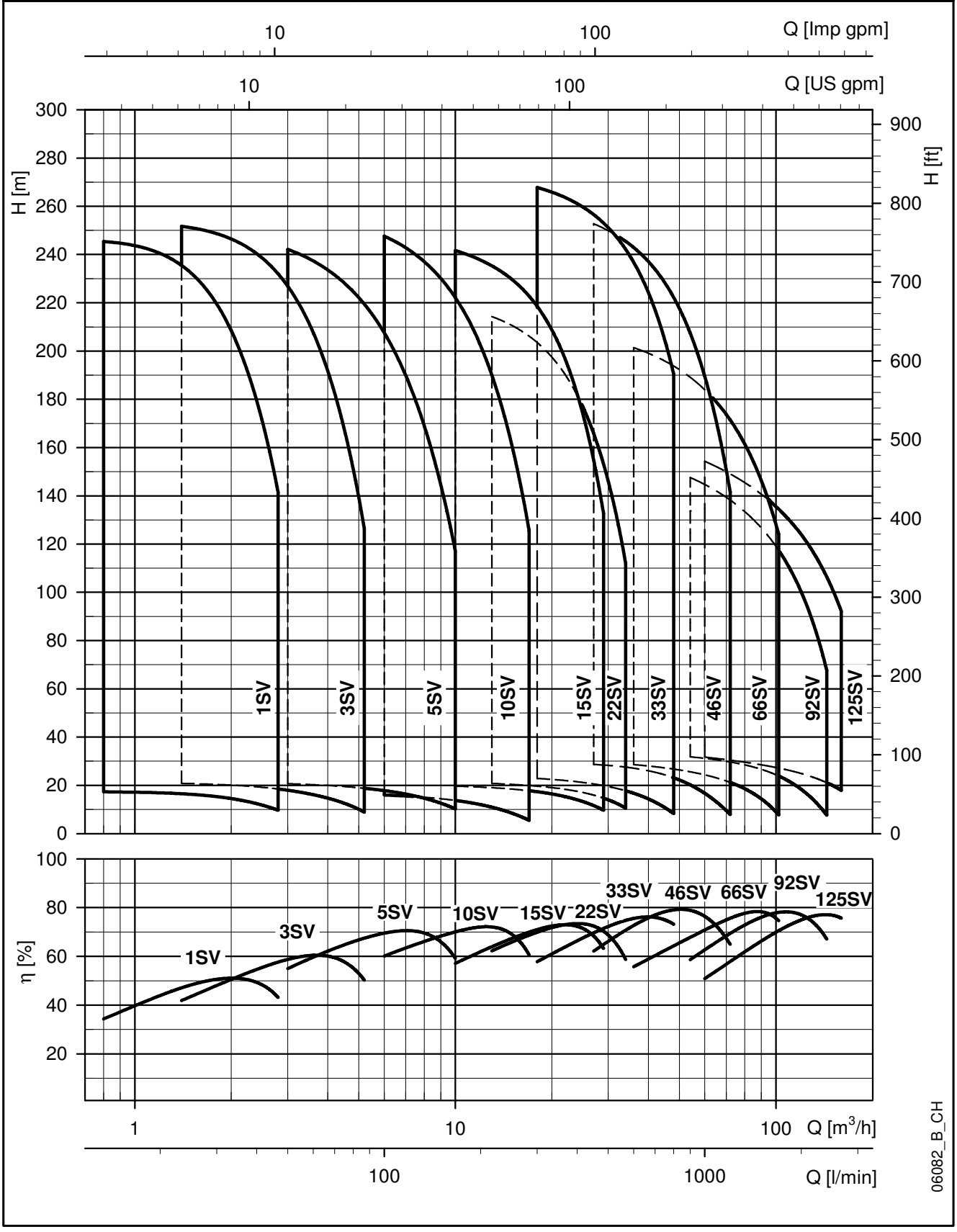

GOULDS WATER TECHNOLOGY
a xylem brand

1, 3, 5SV SERIES
HYDRAULIC PERFORMANCE TABLE AT 60 Hz, 2 POLES

PUMP TYPE	RATED POWER		Q = DELIVERY													
			l/min 0	13,34	20	23,4	30	35	46,6	50	60	70	86,6	100	120	166,67
			m^3/h 0	0,8	1,2	1,4	1,8	2,1	2,8	3,0	3,6	4,2	5,2	6,0	7,2	10,0
	kW	HP	H = TOTAL HEAD IN METRES OF COLUMN OF WATER													
1SV02	0,37	0,5	17,4	17,3	16,9	16,5	15,3	14,0	9,7							
1SV03	0,37	0,5	25,7	25,4	24,7	24,0	22,2	20,2	13,5							
1SV04	0,37	0,5	33,9	33,1	32,0	31,1	28,5	25,7	16,8							
1SV05	0,55	0,75	43,6	43,4	42,4	41,5	38,6	35,4	24,6							
1SV06	0,55	0,75	52,1	51,7	50,4	49,2	45,6	41,7	28,6							
1SV07	0,75	1	61,0	60,8	59,4	58,1	54,1	49,6	34,5							
1SV08	0,75	1	69,4	69,1	67,5	65,9	61,2	56,0	38,7							
1SV09	0,75	1	77,9	77,3	75,4	73,6	68,2	62,3	42,7							
1SV10	1,1	1,5	87,6	87,5	85,7	83,8	78,1	71,8	50,3							
1SV11	1,1	1,5	96,2	96,0	93,9	91,8	85,5	78,5	54,7							
1SV12	1,1	1,5	104,7	104,4	102,0	99,7	92,7	85,0	59,0							
1SV13	1,1	1,5	113,2	112,7	110,0	107,5	99,8	91,4	63,0							
1SV15	1,5	2	131,2	131,2	128,6	125,8	117,4	108,0	75,7							
1SV17	1,5	2	148,3	148,1	145,0	141,8	132,1	121,4	84,5							
1SV18	2,2	3	158,4	158,7	155,6	152,5	142,5	131,4	93,0							
1SV20	2,2	3	175,7	175,8	172,4	168,8	157,7	145,2	102,4							
1SV22	2,2	3	192,9	193,0	189,1	185,0	172,6	158,8	111,6							
1SV24	2,2	3	210,1	210,0	205,5	201,1	187,4	172,3	120,5							
1SV26	2,2	3	227,3	226,8	221,9	217,1	202,1	185,6	129,2							
1SV28	3	4	245,4	245,4	240,5	235,4	219,6	202,0	141,8							
3SV02	0,37	0,5	21,3			20,8	20,4	19,9	18,5	18,0	16,1	13,9	8,9			
3SV03	0,55	0,75	32,6			32,3	31,8	31,3	29,3	28,6	26,0	22,7	15,4			
3SV04	0,75	1	43,4			43,1	42,5	41,8	39,3	38,3	34,8	30,5	20,8			
3SV05	1,1	1,5	54,7			54,6	53,9	53,1	50,0	48,8	44,6	39,2	27,1			
3SV06	1,1	1,5	65,4			65,2	64,3	63,2	59,4	58,0	52,8	46,3	31,8			
3SV07	1,1	1,5	76,1			75,6	74,5	73,2	68,6	66,9	60,8	53,1	36,1			
3SV08	1,5	2	87,2			86,6	85,5	84,2	79,5	77,7	70,9	62,2	43,1			
3SV09	1,5	2	97,8			97,0	95,7	94,2	88,8	86,7	79,1	69,3	47,8			
3SV10	2,2	3	109,5			108,9	107,6	106,0	100,3	98,0	89,7	78,9	55,0			
3SV11	2,2	3	120,3			119,5	118,1	116,3	109,9	107,4	98,2	86,3	60,0			
3SV12	2,2	3	131,0			130,1	128,4	126,4	119,4	116,6	106,6	93,5	64,8			
3SV13	2,2	3	141,8			140,6	138,7	136,6	128,8	125,8	114,8	100,7	69,6			
3SV14	2,2	3	152,5			151,0	148,9	146,5	138,1	134,8	123,0	107,7	74,2			
3SV15	3	4	164,4			163,7	161,8	159,4	150,9	147,4	134,9	118,5	82,0			
3SV17	3	4	185,9			184,8	182,5	179,8	169,9	166,0	151,6	132,9	91,4			
3SV19	3	4	207,3			205,8	203,1	200,0	188,7	184,3	168,1	147,1	100,7			
3SV21	4	5,5	230,9			230,4	227,7	224,6	212,7	207,9	190,5	167,6	116,7			
3SV23	4	5,5	252,5			251,7	248,7	245,1	232,1	226,9	207,7	182,6	126,5			
5SV02	0,55	0,75	21,9							20,7	20,3	19,8	18,8	17,8	16,1	10,2
5SV03	0,75	1	32,7							30,9	30,3	29,5	28,1	26,6	24,0	15,2
5SV04	1,1	1,5	43,9							41,7	40,9	40,0	38,1	36,2	32,7	21,0
5SV05	1,5	2	55,0							52,3	51,4	50,2	47,9	45,5	41,2	26,8
5SV06	1,5	2	65,9							62,4	61,2	59,7	56,8	54,0	48,8	31,3
5SV07	2,2	3	76,5							74,0	72,7	71,0	67,6	64,2	57,8	37,0
5SV08	2,2	3	87,2							84,2	82,6	80,7	76,7	72,8	65,5	41,6
5SV09	2,2	3	97,8							94,3	92,5	90,3	85,7	81,2	72,9	46,0
5SV10	3	4	109,2							105,8	103,9	101,5	96,7	91,8	82,7	53,0
5SV11	3	4	119,9							116,0	113,9	111,3	105,9	100,4	90,4	57,7
5SV12	3	4	130,6							126,1	123,8	120,9	114,9	108,9	98,0	62,2
5SV13	4	5,5	142,5							138,2	135,6	132,4	125,7	119,1	107,0	68,1
5SV14	4	5,5	153,4							148,5	145,7	142,2	135,0	127,9	114,8	72,9
5SV15	4	5,5	164,2							158,8	155,8	152,0	144,3	136,6	122,5	77,6
5SV16	4	5,5	174,9							169,0	165,8	161,8	153,4	145,2	130,2	82,2
5SV17	5,5	7,5	186,4							180,5	177,2	173,0	164,3	155,7	139,9	89,0
5SV19	5,5	7,5	208,0							201,2	197,4	192,7	182,9	173,2	155,4	98,5
5SV21	5,5	7,5	229,6							221,7	217,4	212,2	201,3	190,4	170,8	107,9
5SV23	5,5	7,5	251,0							242,2	237,4	231,5	219,5	207,6	185,9	116,9

Performances in compliance with ISO 9906 - Annex A.

1-5sv-2p60_a_th

GOULDS WATER TECHNOLOGY
a xylem brand

10, 15, 22SV SERIES
HYDRAULIC PERFORMANCE TABLE AT 60 Hz, 2 POLES

PUMP TYPE	RATED POWER		Q = DELIVERY													
			l/min 0	100	120	140	166,7	190	216,67	283,3	320	350	483,3	500	530	566
			m^3/h 0	6,0	7,2	8,4	10,0	11,4	13,0	17,0	19,2	21,0	29,0	30,0	31,8	34,0
	kW	HP	H = TOTAL HEAD IN METRES OF COLUMN OF WATER													
10SV01	0,75	1	17,0	16,0	15,5	14,8	13,7	12,6	10,9	5,5						
10SV02	1,5	2	34,2	31,9	31,0	30,0	28,2	26,3	23,7	14,5						
10SV03	2,2	3	51,8	48,3	47,0	45,4	42,9	40,1	36,3	23,3						
10SV04	3	4	69,2	64,7	63,0	61,0	57,7	54,1	49,1	31,6						
10SV05	4	5,5	87,3	82,2	80,2	77,9	73,9	69,5	63,3	41,2						
10SV06	4	5,5	104,5	98,1	95,7	92,8	87,9	82,6	75,1	48,6						
10SV07	5,5	7,5	122,1	114,5	111,7	108,4	102,7	96,5	87,8	56,9						
10SV08	5,5	7,5	139,2	130,3	127,1	123,1	116,6	109,4	99,4	64,1						
10SV09	7,5	10	157,4	148,5	145,2	141,2	134,3	126,6	115,8	76,6						
10SV10	7,5	10	174,7	164,6	160,9	156,3	148,6	140,1	128,0	84,5						
10SV11	7,5	10	192,0	180,6	176,5	171,4	162,9	153,5	140,1	92,2						
10SV13	11	15	226,7	215,3	210,3	204,0	193,5	181,9	165,9	110,0						
10SV15	11	15	261,2	247,6	241,7	234,4	222,1	208,7	190,1	125,5						
15SV01	1,5	2	19,9				18,3	17,9	17,4	15,8	14,6	13,5	6,5			
15SV02	3	4	41,9				39,2	38,7	38,0	35,4	33,6	31,7	19,3			
15SV03	4	5,5	63,0				59,1	58,3	57,2	53,4	50,6	47,9	29,3			
15SV04	5,5	7,5	83,9				78,7	77,6	76,2	71,2	67,4	63,8	39,1			
15SV05	7,5	10	105,4				99,4	98,1	96,3	90,3	85,7	81,2	50,6			
15SV06	11	15	126,7				119,8	118,3	116,2	109,1	103,7	98,3	61,7			
15SV07	11	15	147,6				139,4	137,6	135,1	126,7	120,3	114,0	71,2			
15SV08	15	20	171,9				161,2	159,5	157,1	148,7	142,2	135,6	88,7			
15SV09	15	20	193,2				181,0	179,0	176,3	166,8	159,5	152,1	99,1			
15SV10	15	20	214,4				200,8	198,5	195,4	184,8	176,6	168,3	109,4			
15SV11	18,5	25	236,4				221,8	219,4	216,1	204,6	195,7	186,7	122,3			
15SV12	18,5	25	257,8				241,7	239,0	235,3	222,8	213,0	203,1	132,7			
22SV01	2,2	3	22,2						20,8	19,9	19,3	18,7	14,7	14,0	12,6	10,6
22SV02	4	5,5	44,5						41,6	39,9	38,7	37,5	29,5	28,1	25,2	21,3
22SV03	5,5	7,5	66,7						62,1	59,5	57,6	55,8	43,7	41,6	37,3	31,4
22SV04	7,5	10	89,0						85,0	81,6	79,1	76,7	60,1	57,2	51,5	43,6
22SV05	11	15	111,5						106,7	102,6	99,5	96,5	75,9	72,3	65,2	55,4
22SV06	11	15	133,5						127,5	122,4	118,6	114,9	90,1	85,8	77,2	65,4
22SV07	15	20	156,4						150,1	144,4	140,1	135,9	107,3	102,3	92,4	78,7
22SV08	15	20	178,6						171,0	164,4	159,5	154,7	121,9	116,2	104,8	89,1
22SV09	18,5	25	201,3						193,2	186,0	180,5	175,2	138,5	132,1	119,4	101,8
22SV10	18,5	25	223,5						214,3	206,2	200,1	194,1	153,2	146,1	131,9	112,3

Performances in compliance with ISO 9906 - Annex A.

10-22sv-2p60_b_th

GOULDS WATER TECHNOLOGY
a xylem brand

33, 46SV SERIES
HYDRAULIC PERFORMANCE TABLE AT 60 Hz, 2 POLES

PUMP TYPE	RATED POWER		Q = CAPACITY										
			l/min 0	300	350	400	450	550	700	800	900	1000	1200
			m^3/h 0	18	21	24	27	33	42	48	54	60	72
	kW	HP	H = TOTAL HEAD IN METRES OF COLUMN OF WATER										
33SV1/1A	3	4	24,5	22,8	22,2	21,5	20,6	18,2	13	8,3			
33SV1	5,5	7,5	34,5	33,1	32,7	32,2	31,6	30,1	26,6	23,2			
33SV2/2A	5,5	7,5	49,6	47,7	46,7	45,3	43,6	39	28,9	20			
33SV2/1A	7,5	10	59,6	56,5	55,5	54,3	52,8	48,9	40,2	32,2			
33SV2	11	15	69,4	66,8	66	65	64	61	54	47,3			
33SV3/2A	11	15	86	81,8	80	78	76	70	57	44,7			
33SV3/1A	11	15	94,7	90,4	89	87	85	80	68	56,9			
33SV3	15	20	104,2	100,2	99	98	96	91	81	71,1			
33SV4/2A	15	20	119,8	114,8	113	110	107	99	82	65			
33SV4/1A	15	20	128,9	123,7	122	120	117	110	94	79			
33SV4	18,5	25	138,3	132,9	131	129	127	121	107	93,8			
33SV5/2A	18,5	25	155,8	149,4	147	145	141	132	112	94,1			
33SV5/1A	22	30	163,9	157,5	155	153	150	142	123	105,3			
33SV5	22	30	173	166,2	164	162	159	151	134	117,3			
33SV6/2A	22	30	189	181,7	179	176	172	162	139	116			
33SV6/1A	30	40	199,2	191,9	190	187	183	174	152	130,4			
33SV6	30	40	208,5	200,9	199	196	192	183	163	142,8			
33SV7/2A	30	40	224,6	216,5	214	210	206	194	168	141,8			
33SV7/1A	30	40	233,9	225,4	223	219	215	204	179	154,2			
33SV7	30	40	243,3	234,3	232	228	225	214	190	166,6			
33SV8/2A	37	50	259,3	250	247	243	238	225	195	165,6			
33SV8/1A	37	50	268,7	258,9	256	252	247	235	206	178			
33SV8	37	50	278,1	267,8	265	261	257	245	217	190,4			
46SV1/1A	5,5	7,5	29,1				28,6	27,7	25,4	23,1	20,2	16,7	7,9
46SV1	7,5	10	39,9				36	34,2	31,6	29,6	27,1	24,2	16,4
46SV2/2A	11	15	56,7				58,8	58	54	50	45,2	39,1	24
46SV2/1A	11	15	67,8				64,8	63	59	55	50	44,3	29
46SV2	15	20	78,2				72,1	70	67	64	60	54,7	40,8
46SV3/2A	18,5	25	95,5				94,6	93	87	82	75	66	44,2
46SV3/1A	18,5	25	106,1				101	99	93	88	82	74	52,1
46SV3	18,5	25	117,2				108,1	106	100	95	89	82	61,5
46SV4/2A	22	30	134,1				130,3	127	120	113	103	92	62,7
46SV4/1A	30	40	144,2				137,3	134	127	120	111	101	73
46SV4	30	40	155,7				143,9	140	133	126	118	108	80
46SV5/2A	30	40	171,6				166,7	163	154	146	134	121	86
46SV5/1A	30	40	183,1				173,3	169	160	152	141	127	93
46SV5	30	40	194,6				179,9	176	166	158	147	134	100
46SV6/2A	37	50	210,5				202,7	198	188	177	164	147	105,9
46SV6/1A	37	50	222				209,3	205	194	183	170	154	112,9
46SV6	37	50	233,6				215,9	211	200	190	177	161	120,1
46SV7/2A	45	60	250,3				239,5	234	222	210	194	176	127,6
46SV7/1A	45	60	261,8				246,2	241	228	216	201	183	134,6
46SV7	45	60	273,4				252,8	247	234	222	208	190	141,7

Performances in compilance with ISO 9906 - Annex A.

33-46sv-2p60-en_a_th

GOULDS WATER TECHNOLOGY
a xylem brand

66, 92, 125SV SERIES
HYDRAULIC PERFORMANCE TABLE AT 60 Hz, 2 POLES

PUMP TYPE	RATED POWER		Q = CAPACITY										
			l/min 0	600	800	900	1200	1400	1600	1700	2000	2200	2400
			m^3/h 0	36	48	54	72	84	96	102	120	132	144
	kW	HP	H = TOTAL HEAD IN METRES OF COLUMN OF WATER										
66SV1/1A	7,5	10	31,4	28,6	26,7	25,6	21,2	17,0	11	7,8			
66SV1	11	15	43,8	40	37,9	36,8	33,1	29,9	25,9	23,4			
66SV2/2A	15	20	64,5	60,1	58	56	49,4	42	32,8	27			
66SV2/1A	18,5	25	74,9	69,7	67	65	58	51	42,3	37,1			
66SV2	18,5	25	85,4	79,5	76	74	66	60	52	47,7			
66SV3/2A	22	30	106,6	99,5	96	93	82	72	59	52,2			
66SV3/1A	30	40	117,4	110,3	106	103	92	82	70	63,7			
66SV3	30	40	127,8	120,3	115	112	101	92	80	74			
66SV4/2A	37	50	149,1	139,9	135	131	117	103	87	77,5			
66SV4/1A	37	50	159,2	150	144	141	126	113	97	88,1			
66SV4	37	50	169,3	160,2	154	150	136	123	108	98,6			
66SV5/2A	45	60	191,9	180,9	174	170	152	135	115	103,2			
66SV5/1A	45	60	202	191,2	184	180	162	146	125	113,6			
66SV5	45	60	212,2	201,4	194	189	172	156	136	124,1			
92SV1/1A	11	15	36,4			31,8	29,7	27,8	25,3	23,9	18,3	13,5	7,6
92SV1	15	20	49,5			41,7	37,7	35,3	33	31,9	28,1	24,7	19,9
92SV2/2A	18,5	25	69,9			64	60	57	52	50	39,6	31,1	21,1
92SV2/1A	22	30	83,6			74,2	69	65	60	58	49	41,5	32,1
92SV2	30	40	97,9			84,7	78	73	69	66	59	52	43,8
92SV3/2A	37	50	117,4			106,3	100	94	88	84	71	60	46,1
92SV3/1A	37	50	131,5			117,5	109	103	96	92	80	69	56,5
92SV3	45	60	144,9			127,8	118	111	104	101	90	81	68,4
92SV4/2A	45	60	163			147,6	138	131	122	117	100	86	67,8

Performances in compilance with ISO 9906 - Annex A.

66-92sv-2p60-en_a_th

PUMP TYPE	RATED POWER		Q = DELIVERY													
			l/min 0	600	700	800	900	1000	1200	1500	1700	1900	2000	2200	2400	2666
			m^3/h 0	36,0	42,0	48,0	54,0	60,0	72,0	90,0	102,0	114,0	120,0	132,0	144,0	160,0
	kW	HP	H = TOTAL HEAD IN METRES OF COLUMN OF WATER													
125SV1	15	20	40,1					31,7	30,4	28,5	27,2	25,7	24,9	23,1	21,1	17,9
125SV2/2A	22	30	73,0					61,7	59,6	56,3	53,8	51,1	49,6	46,3	42,6	36,9
125SV3/3B	30	40	101,9					85,3	82,2	77,1	73,3	69,0	66,6	61,5	55,5	46,3
125SV3	37	50	117,5					100,2	97,0	92,0	88,4	84,4	82,2	77,5	72,3	64,2
125SV4/4A	45	60	146,1					123,5	119,3	112,6	107,6	102,1	99,1	92,6	85,2	73,7
125SV5/5A	55	75	182,6					154,3	149,1	140,7	134,5	127,7	123,9	115,7	106,5	92,1

Performances in compliance with ISO 9906 - Annex A.

125sv-2p60_a_th

1SV SERIES
DIMENSIONS AND WEIGHTS AT 60Hz, 2 POLES

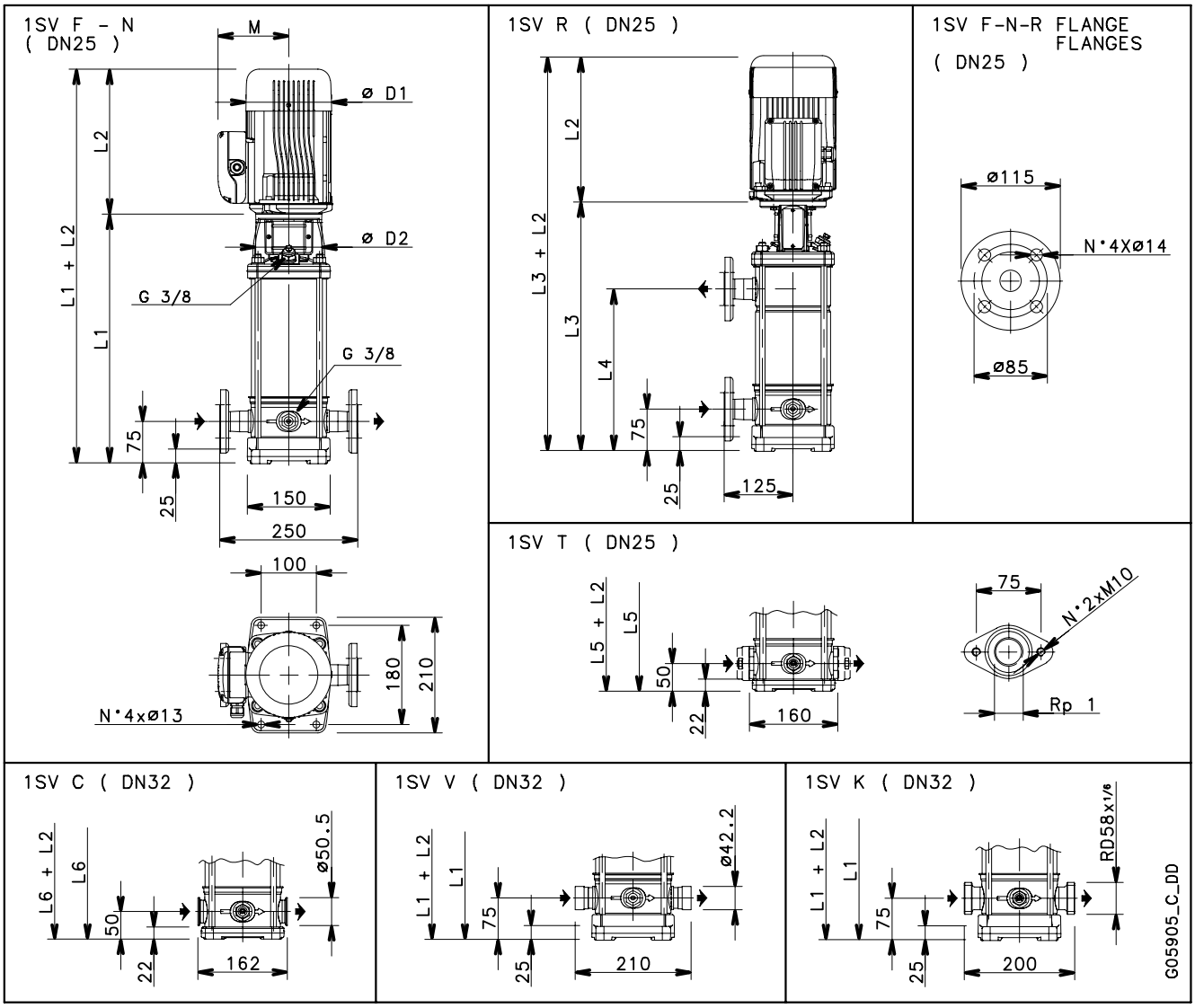

PUMP TYPE	MOTOR		DIMENSIONS (mm)													WEIGHT kg	
				L2						M		D1					ELECTRIC
	kW	SIZE	L1	1 ~	3 ~	L3	L4	L5	L6	1 ~	3 ~	1 ~	3 ~	D2		PUMP	PUMP
1SV02..	0,37	71	278	209	209	-	-	253	253	111	111	120	120	105		8,3	13,2
1SV03..	0,37	71	278	209	209	-	-	253	253	111	111	120	120	105		8,6	13,4
1SV04..	0,37	71	298	209	209	-	-	273	273	111	111	120	120	105		9	13,8
1SV05..	0,55	71	318	231	231	-	-	293	293	121	121	140	140	105		9,4	16,1
1SV06..	0,55	71	338	231	231	-	-	313	313	121	121	140	140	105		9,8	16,5
1SV07../D	0,75	80	368	226	263	368	207	343	343	121	129	140	155	120		10,6	20,2
1SV08../D	0,75	80	388	226	263	388	227	363	363	121	129	140	155	120		11	20,6
1SV09../D	0,75	80	408	226	263	408	247	383	383	121	129	140	155	120		11,4	21
1SV10../D	1,1	80	428	263	263	428	267	403	403	137	129	155	155	120		11,8	23,2
1SV11../D	1,1	80	448	263	263	448	287	423	423	137	129	155	155	120		12,2	23,6
1SV12../D	1,1	80	468	263	263	468	307	443	443	137	129	155	155	120		12,6	24
1SV13../D	1,1	80	488	263	263	488	327	463	463	137	129	155	155	120		13	24,4
1SV15../D	1,5	90	538	263	263	538	367	513	513	137	129	155	155	140		14,1	27
1SV17../D	1,5	90	578	263	263	578	407	553	553	137	129	155	155	140		14,9	28
1SV18..	2,2	90	598	298	298	598	427	573	573	151	134	174	174	140		15,3	33,5
1SV20..	2,2	90	638	298	298	638	467	-	613	151	134	174	174	140		16,1	34,3
1SV22..	2,2	90	678	298	298	678	507	-	653	151	134	174	174	140		16,9	35
1SV24..	2,2	90	718	298	298	718	547	-	693	151	134	174	174	140		17,7	35,8
1SV26..	2,2	90	758	298	298	758	587	-	733	151	134	174	174	140		18,5	36,6
1SV28..	3	100	808	-	298	808	627	-	783	-	134	-	174	140		19,7	40,7

1sv-2p60_c_td

GOULDS WATER TECHNOLOGY
a xylem brand

1SV SERIES
OPERATING CHARACTERISTICS AT 60Hz, 2 POLES

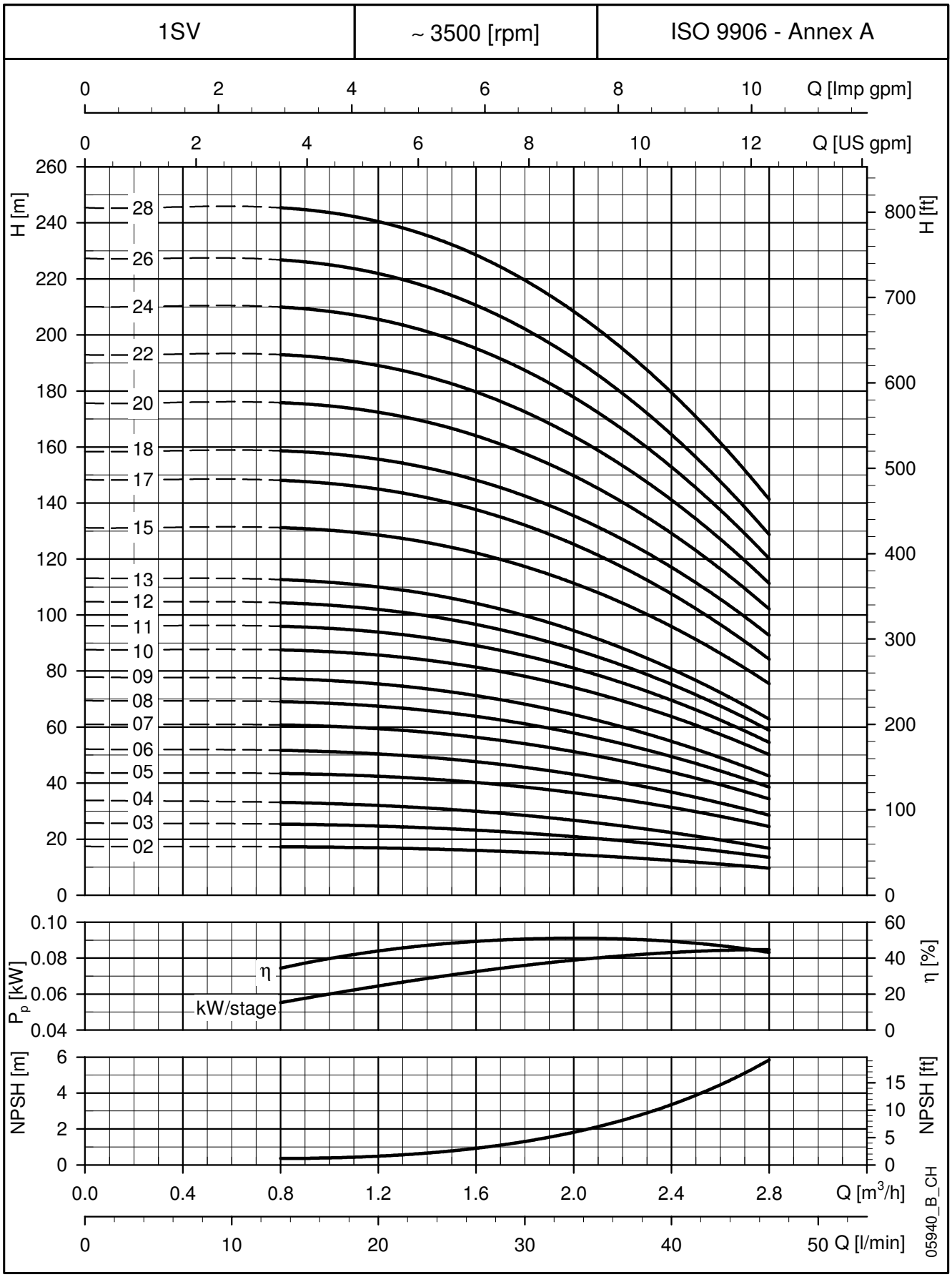

These performances are valid for liquids with density ρ = 1.0 Kg/dm³ and kinematic viscosity ν = 1 mm²/sec.

GOULDS WATER TECHNOLOGY
a xylem brand

3SV SERIES
DIMENSIONS AND WEIGHTS AT 60Hz, 2 POLES

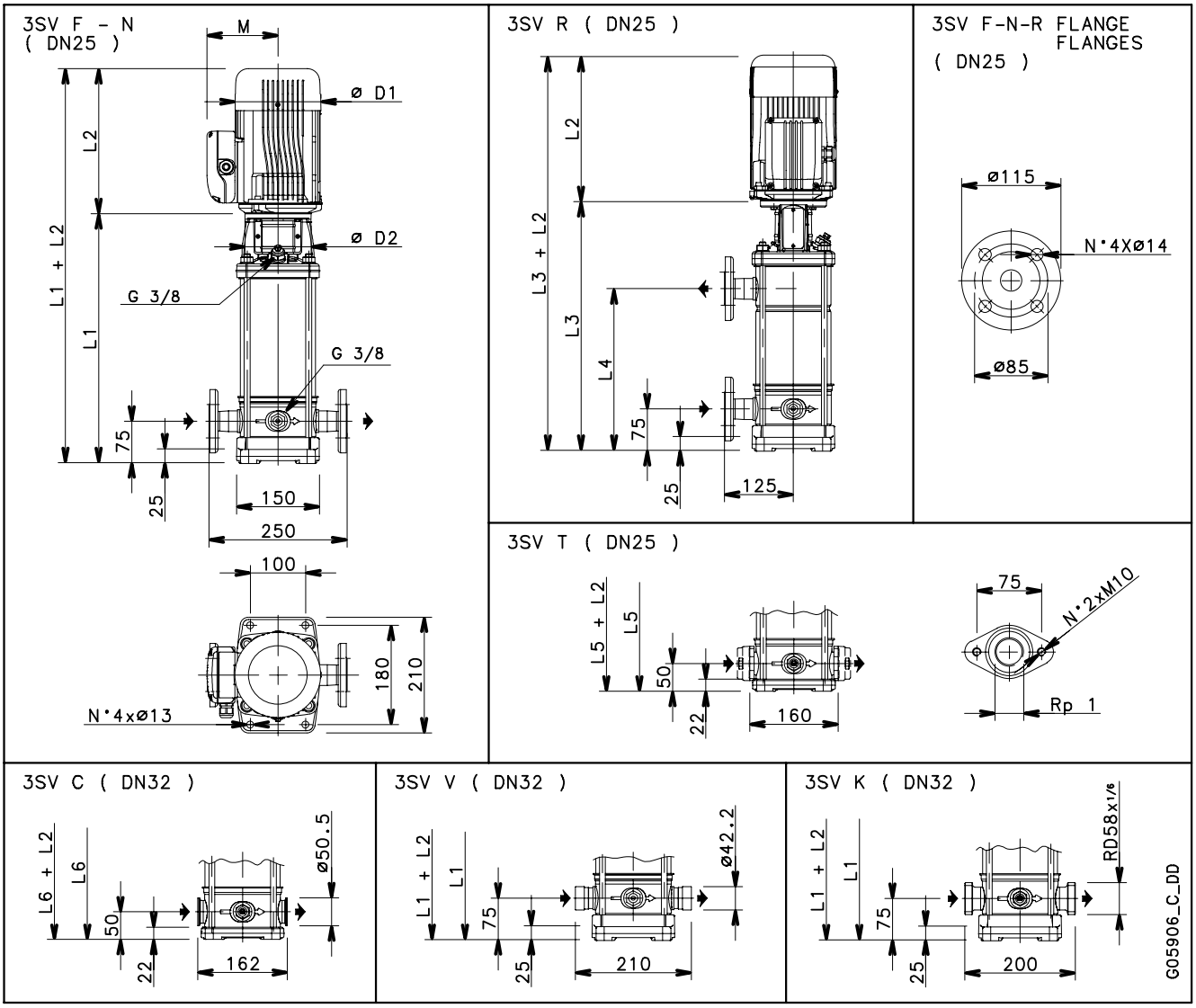

PUMP TYPE	MOTOR		DIMENSIONS (mm)													WEIGHT kg	
				L2						M		D1					ELECTRIC
	kW	SIZE	L1	1 ~	3 ~	L3	L4	L5	L6	1 ~	3 ~	1 ~	3 ~	D2	PUMP	PUMP
3SV02..	0,37	71	278	209	209	-	-	253	253	111	111	120	120	105	8,1	12,8
3SV03..	0,55	71	278	231	231	-	-	253	253	121	121	140	140	105	8,5	15,2
3SV04../D	0,75	80	308	226	263	-	-	283	283	121	129	140	155	120	9,3	18,9
3SV05../D	1,1	80	328	263	263	-	-	303	303	137	129	155	155	120	9,7	21,1
3SV06../D	1,1	80	348	263	263	-	-	323	323	137	129	155	155	120	10,1	21,5
3SV07../D	1,1	80	368	263	263	368	207	343	343	137	129	155	155	120	10,5	21,9
3SV08../D	1,5	90	398	263	263	398	227	373	373	137	129	155	155	140	11,2	24,5
3SV09../D	1,5	90	418	263	263	418	247	393	393	137	129	155	155	140	11,6	25
3SV10..	2,2	90	438	298	298	438	267	413	413	151	134	174	174	140	12	30,2
3SV11..	2,2	90	458	298	298	458	287	433	433	151	134	174	174	140	12,4	30,6
3SV12..	2,2	90	478	298	298	478	307	453	453	151	134	174	174	140	12,8	30,9
3SV13..	2,2	90	498	298	298	498	327	473	473	151	134	174	174	140	13,2	31,3
3SV14..	2,2	90	518	298	298	518	347	493	493	151	134	174	174	140	13,6	31,7
3SV15..	3	100	548	-	298	548	367	-	523	-	134	-	174	160	14,4	35,4
3SV17..	3	100	588	-	298	588	407	-	563	-	134	-	174	160	15,2	36,2
3SV19..	3	100	628	-	298	628	447	-	603	-	134	-	174	160	16	37
3SV21..	4	112	668	-	319	668	487	-	643	-	154	-	197	160	16,8	43,2
3SV23..	4	112	708	-	319	708	527	-	683	-	154	-	197	160	17,6	44

3sv-2p60_c_td

GOULDS WATER TECHNOLOGY
a xylem brand

3SV SERIES
OPERATING CHARACTERISTICS AT 60Hz, 2 POLES

3SV	~ 3500 [rpm]	ISO 9906 - Annex A

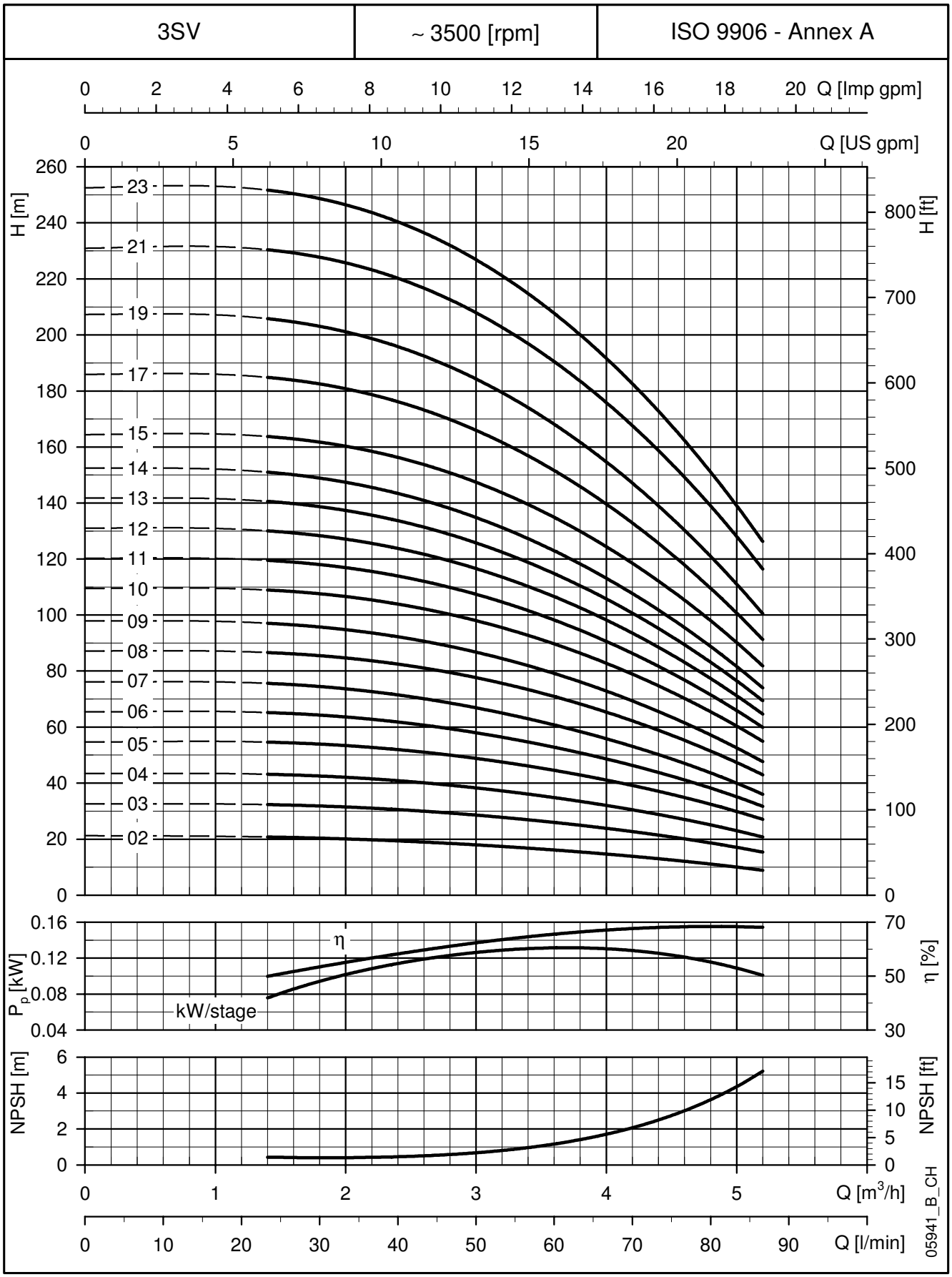

These performances are valid for liquids with density ρ = 1.0 Kg/dm³ and kinematic viscosity ν = 1 mm²/sec.

GOULDS WATER TECHNOLOGY
a xylem brand

5SV SERIES
DIMENSIONS AND WEIGHTS AT 60Hz, 2 POLES

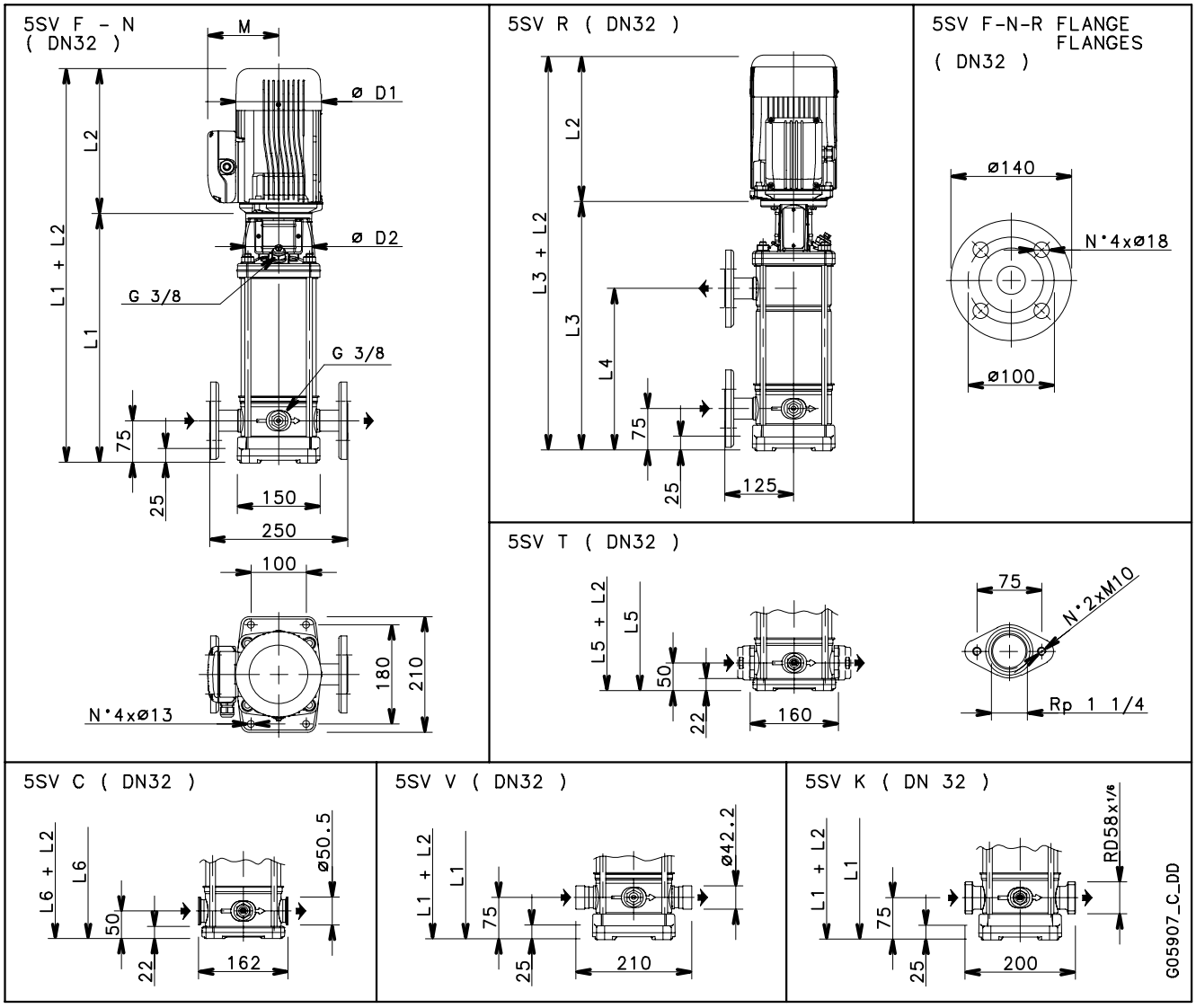

PUMP TYPE	MOTOR		DIMENSIONS (mm)													WEIGHT kg	
				L2						M		D1					ELECTRIC
	kW	SIZE	L1	1 ~	3 ~	L3	L4	L5	L6	1 ~	3 ~	1 ~	3 ~	D2		PUMP	PUMP
5SV02..	0,55	71	268	231	231	-	-	243	243	121	121	140	140	105		8,5	15,2
5SV03../D	0,75	80	303	226	263	-	-	278	278	121	129	140	155	120		9,4	19
5SV04../D	1,1	80	328	263	263	-	-	303	303	137	129	155	155	120		9,8	21,2
5SV05../D	1,5	90	363	263	263	-	-	338	338	137	129	155	155	140		10,6	24
5SV06../D	1,5	90	388	263	263	-	-	363	363	137	129	155	155	140		11,1	24,5
5SV07..	2,2	90	413	298	298	413	242	388	388	151	134	174	174	140		11,6	29,8
5SV08..	2,2	90	438	298	298	438	267	413	413	151	134	174	174	140		12,1	30,2
5SV09..	2,2	90	463	298	298	463	292	438	438	151	134	174	174	140		12,5	30,7
5SV10..	3	100	498	-	298	498	317	473	473	-	134	-	174	160		13,5	34,4
5SV11..	3	100	523	-	298	523	342	498	498	-	134	-	174	160		13,9	34,9
5SV12..	3	100	548	-	298	548	367	523	523	-	134	-	174	160		14,4	35,4
5SV13..	4	112	573	-	319	573	392	548	548	-	154	-	197	160		14,9	41,2
5SV14..	4	112	598	-	319	598	417	573	573	-	154	-	197	160		15,3	41,7
5SV15..	4	112	623	-	319	623	442	-	598	-	154	-	197	160		15,8	42,2
5SV16..	4	112	648	-	319	648	467	-	623	-	154	-	197	160		16,3	42,6
5SV17..	5,5	132	693	-	375	693	492	-	668	-	168	-	214	300		20,7	58,2
5SV19..	5,5	132	743	-	375	743	542	-	718	-	168	-	214	300		21,6	59,2
5SV21..	5,5	132	793	-	375	793	592	-	768	-	168	-	214	300		22,6	60,1
5SV23..	5,5	132	843	-	375	843	642	-	818	-	168	-	214	300		23,5	61,1

5sv-2p60_c_td

GOULDS WATER TECHNOLOGY
a xylem brand

5SV SERIES
OPERATING CHARACTERISTICS AT 60Hz, 2 POLES

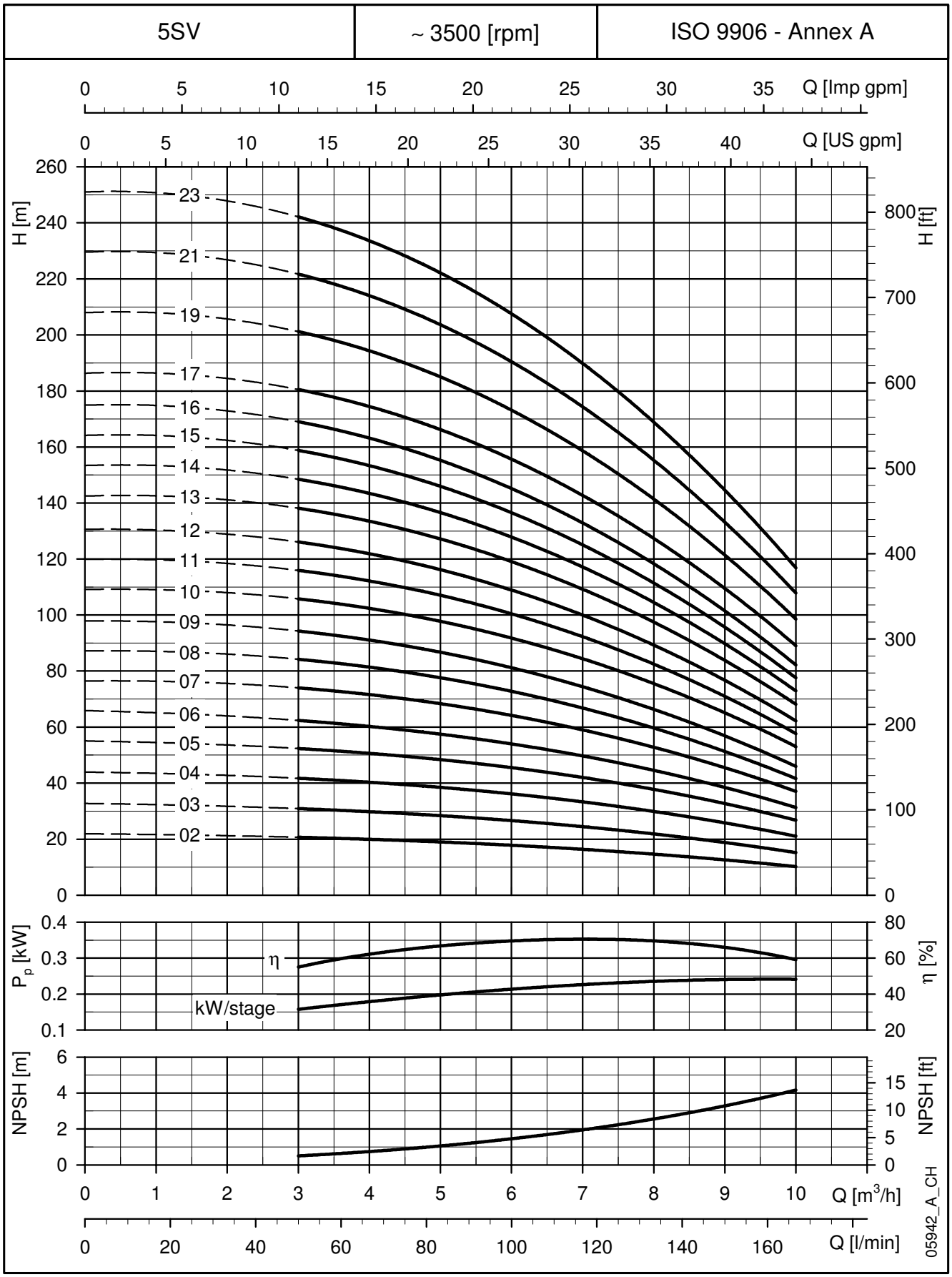

These performances are valid for liquids with density ρ = 1.0 Kg/dm³ and kinematic viscosity ν = 1 mm²/sec.

10SV SERIES
DIMENSIONS AND WEIGHTS AT 60Hz, 2 POLES

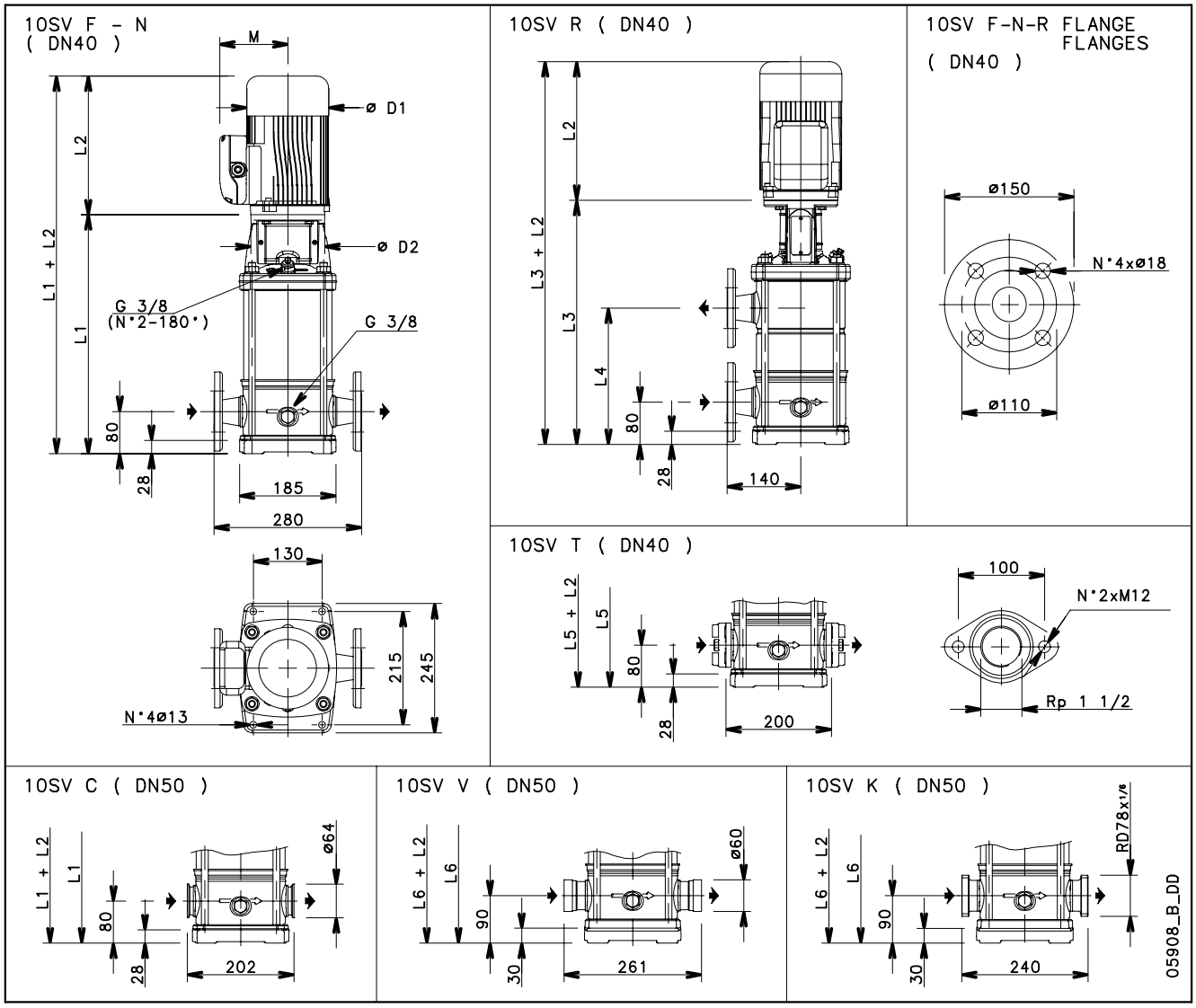

PUMP TYPE	MOTOR		DIMENSIONS (mm)													WEIGHT kg	
				L2						M		D1					ELECTRIC
	kW	SIZE	L1	1 ~	3 ~	L3	L4	L5	L6	1 ~	3 ~	1 ~	3 ~	D2	PUMP	PUMP
10SV01../D	0,75	80	357	226	263	-	-	357	367	121	129	140	155	120	14,3	24
10SV02../D	1,5	90	367	263	263	-	-	367	377	137	129	155	155	140	15,6	29
10SV03..	2,2	90	399	298	298	-	-	399	409	151	134	174	174	140	16,6	34,7
10SV04..	3	100	441	-	298	-	-	441	451	-	134	-	174	160	18,4	39,4
10SV05..	4	112	473	-	319	473	259	473	483	-	154	-	197	160	19,3	45,7
10SV06..	4	112	505	-	319	505	291	505	515	-	154	-	197	160	20,3	46,6
10SV07..	5,5	132	604	-	375	604	323	604	614	-	168	-	214	300	26	63,5
10SV08..	5,5	132	636	-	375	636	355	636	646	-	168	-	214	300	26,9	64,5
10SV09..	7,5	132	668	-	367	668	387	668	678	-	191	-	256	300	27,9	83,6
10SV10..	7,5	132	700	-	367	700	419	-	710	-	191	-	256	300	28,8	84,5
10SV11..	7,5	132	732	-	367	732	451	-	742	-	191	-	256	300	29,7	85,5
10SV13..	11	160	826	-	428	826	515	-	836	-	191	-	256	350	34,4	105
10SV15..	11	160	890	-	428	890	579	-	900	-	191	-	256	350	36,3	107

10sv-2p60_c_td

GOULDS WATER TECHNOLOGY
a xylem brand

10SV SERIES
OPERATING CHARACTERISTICS AT 60Hz, 2 POLES

10SV	~ 3500 [rpm]	ISO 9906 - Annex A

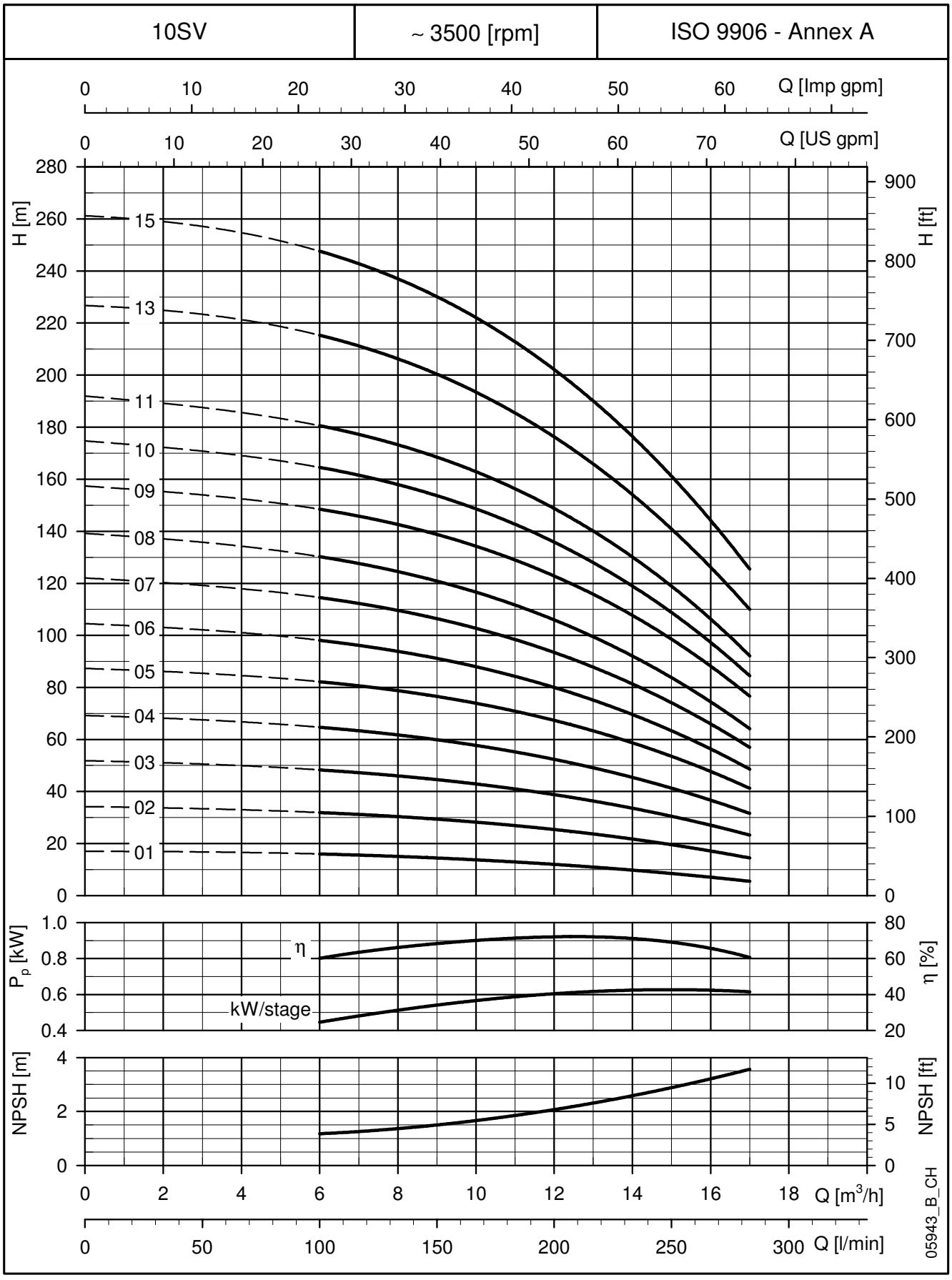

These performances are valid for liquids with density ρ = 1.0 Kg/dm³ and kinematic viscosity ν = 1 mm²/sec.

GOULDS WATER TECHNOLOGY
a xylem brand

15SV SERIES
DIMENSIONS AND WEIGHTS AT 60Hz, 2 POLES

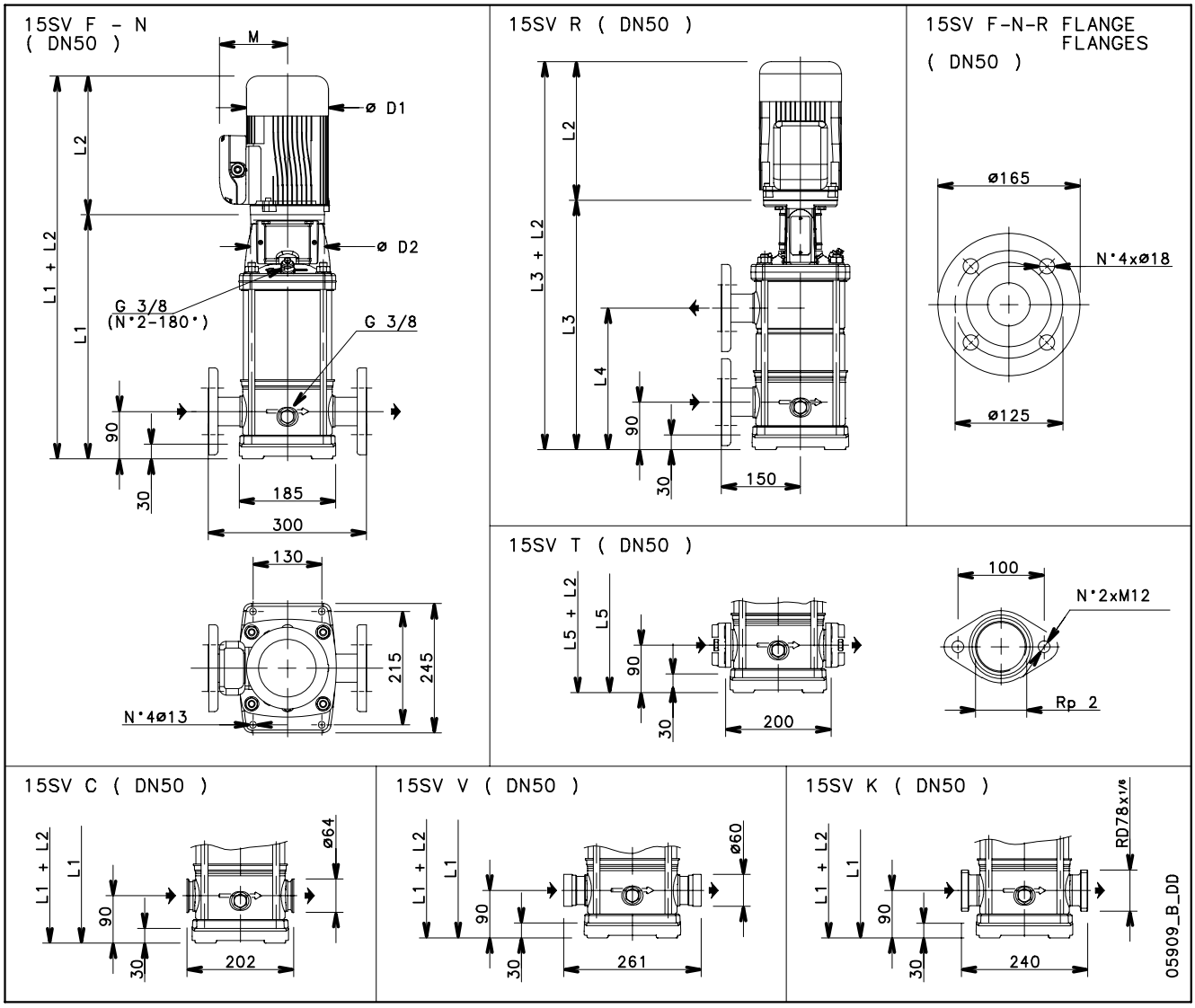

PUMP TYPE	MOTOR		DIMENSIONS (mm)												WEIGHT kg	
				L2					M		D1					ELECTRIC
	kW	SIZE	L1	1 ~	3 ~	L3	L4	L5	1 ~	3 ~	1 ~	3 ~	D2	PUMP	PUMP
15SV01../D	1,5	90	409	263	263	-	-	409	137	129	155	155	140	15,4	29
15SV02..	3	100	419	-	298	-	-	419	-	134	-	174	160	17,7	38,7
15SV03..	4	112	467	-	319	-	-	467	-	154	-	197	160	19	45,4
15SV04..	5,5	132	582	-	375	582	301	582	-	168	-	214	300	25,2	62,7
15SV05..	7,5	132	630	-	367	630	349	630	-	191	-	256	300	26,5	82,3
15SV06..	11	160	708	-	428	708	397	708	-	191	-	256	350	30,6	101
15SV07..	11	160	756	-	428	756	445	756	-	191	-	256	350	32	103
15SV08..	15	160	804	-	494	804	493	-	-	240	-	313	350	33,3	136
15SV09..	15	160	852	-	494	852	541	-	-	240	-	313	350	34,6	137
15SV10..	15	160	900	-	494	900	589	-	-	240	-	313	350	36	138
15SV11..	18,5	160	948	-	494	948	637	-	-	240	-	313	350	37,3	148
15SV12..	18,5	160	996	-	494	996	685	-	-	240	-	313	350	38,6	150

15sv-2p60_c_td

15SV SERIES
OPERATING CHARACTERISTICS AT 60Hz, 2 POLES

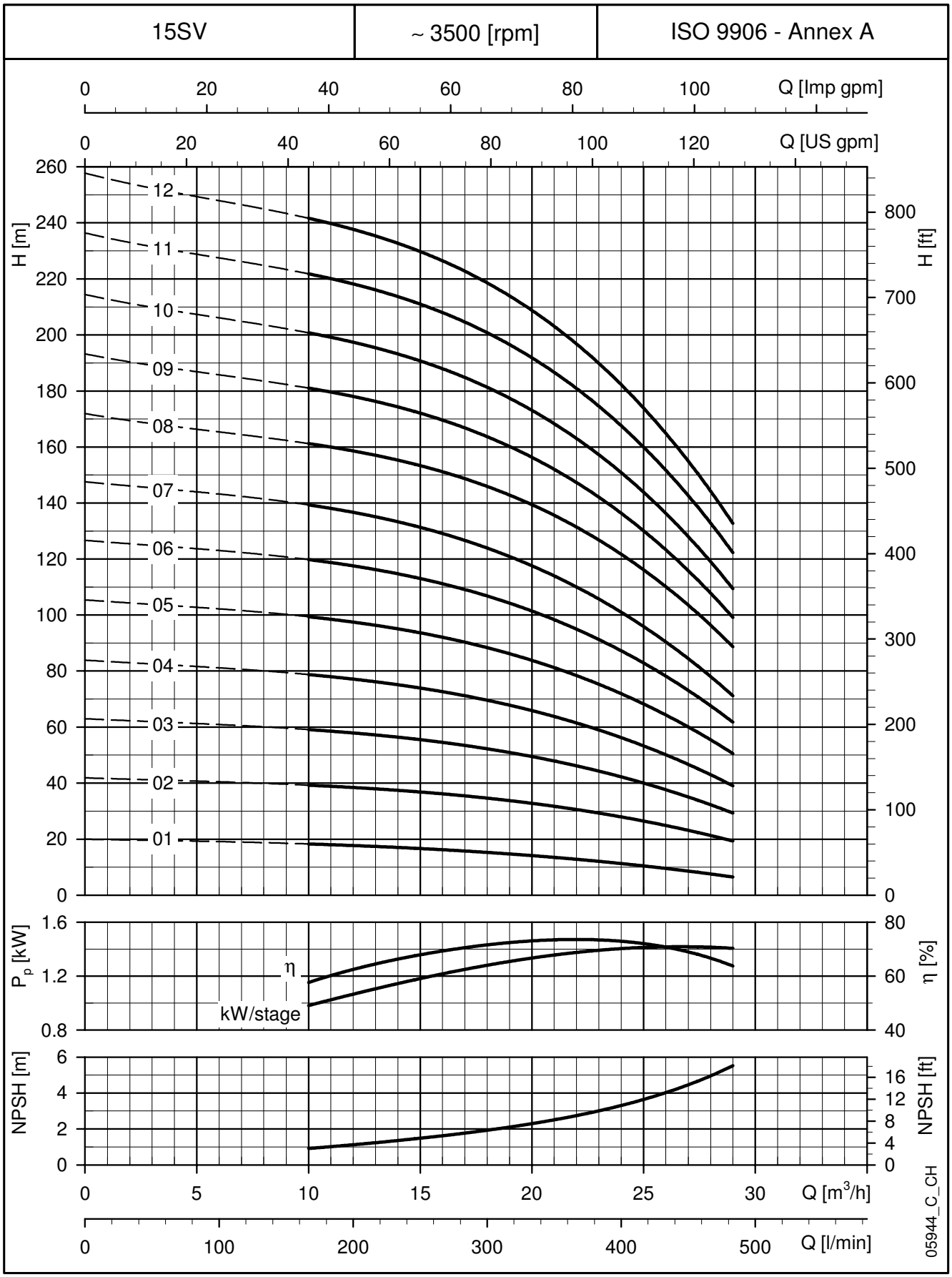

These performances are valid for liquids with density ρ = 1.0 Kg/dm³ and kinematic viscosity ν = 1 mm²/sec.

GOULDS WATER TECHNOLOGY
a xylem brand

22SV SERIES
DIMENSIONS AND WEIGHTS AT 60Hz, 2 POLES

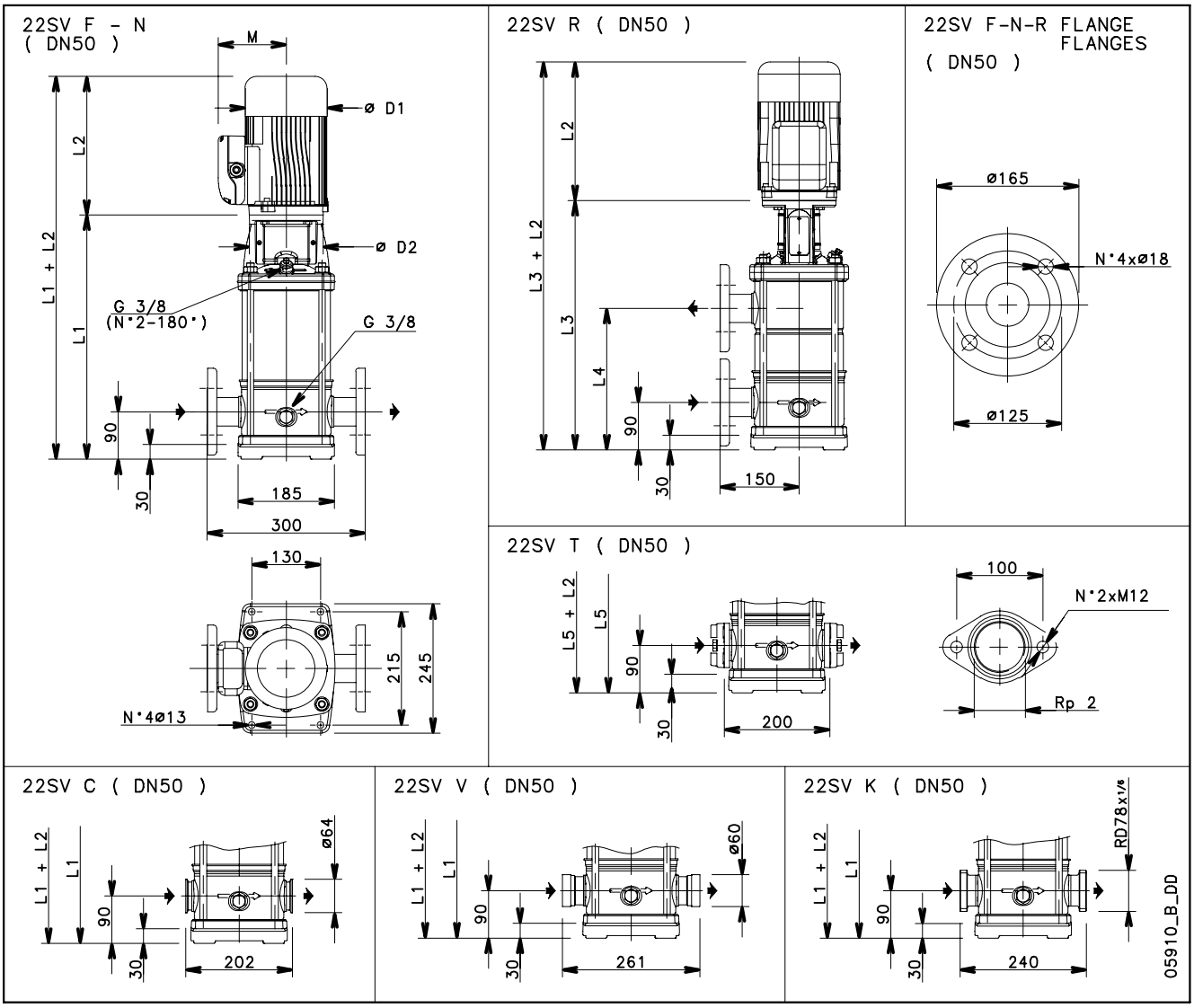

PUMP TYPE	MOTOR		DIMENSIONS (mm)												WEIGHT kg	
				L2					M		D1					ELECTRIC
	kW	SIZE	L1	1 ~	3 ~	L3	L4	L5	1 ~	3 ~	1 ~	3 ~	D2		PUMP	PUMP
22SV01..	2,2	90	409	298	298	-	-	409	151	134	174	174	140		15,9	34,1
22SV02..	4	112	419	-	319	-	-	419	-	154	-	197	160		18,1	44,5
22SV03..	5,5	132	534	-	375	-	-	534	-	168	-	214	300		24,3	61,8
22SV04..	7,5	132	582	-	367	582	301	582	-	191	-	256	300		25,6	81,4
22SV05..	11	160	660	-	428	660	349	660	-	191	-	256	350		29,8	100
22SV06..	11	160	708	-	428	708	397	708	-	191	-	256	350		31,1	102
22SV07..	15	160	756	-	494	756	445	756	-	240	-	313	350		32,4	135
22SV08..	15	160	804	-	494	804	493	-	-	240	-	313	350		33,8	136
22SV09..	18,5	160	852	-	494	852	541	-	-	240	-	313	350		35,1	146
22SV10..	18,5	160	900	-	494	900	589	-	-	240	-	313	350		36,4	148

22sv-2p60_c_td

GOULDS WATER TECHNOLOGY
a xylem brand

22SV SERIES
OPERATING CHARACTERISTICS AT 60Hz, 2 POLES

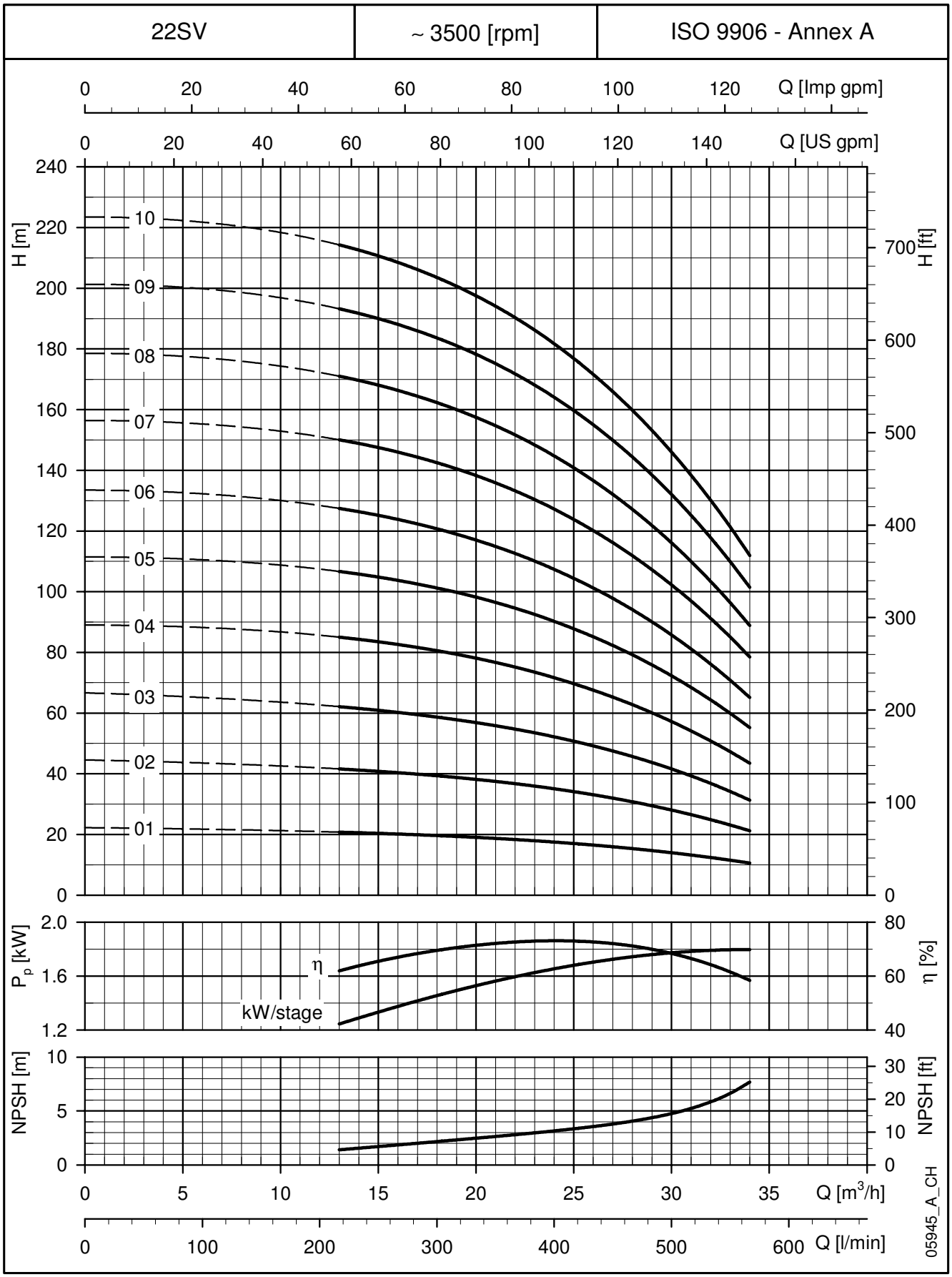

These performances are valid for liquids with density ρ = 1.0 Kg/dm³ and kinematic viscosity ν = 1 mm²/sec.

GOULDS WATER TECHNOLOGY
a xylem brand

33SV SERIES
DIMENSIONS AND WEIGHTS AT 60 Hz, 2 POLES

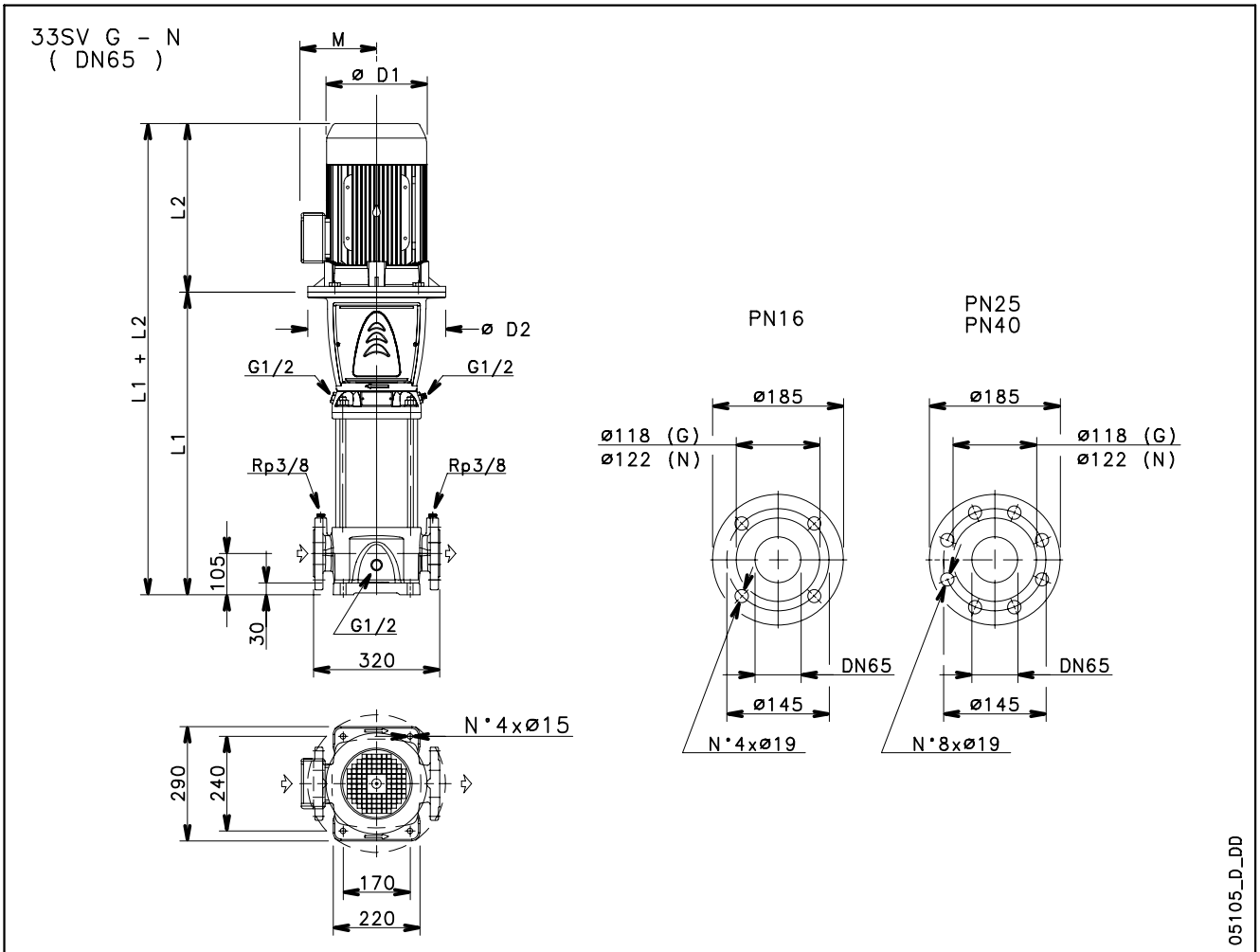

PUMP TYPE	MOTOR		DIMENSIONS (mm)						WEIGHT kg	
	kW	SIZE	L1	L2	D1	D2	M	PN	PUMP	ELECTRIC PUMP
33SV1/1A..	3	100	489	298	174	160	134	16	52	73
33SV1..	5,5	132	509	375	214	300	168	16	57	95
33SV2/2A..	5,5	132	584	375	214	300	168	16	61	99
33SV2/1A..	7,5	132	584	367	256	300	191	16	61	117
33SV2..	11	160	619	428	256	350	191	16	65	136
33SV3/2A..	11	160	694	428	256	350	191	16	69	140
33SV3/1A..	11	160	694	428	256	350	191	16	69	140
33SV3..	15	160	694	494	313	350	240	16	69	171
33SV4/2A..	15	160	769	494	313	350	240	16	73	175
33SV4/1A..	15	160	769	494	313	350	240	25	73	175
33SV4..	18,5	160	769	494	313	350	240	25	73	184
33SV5/2A..	18,5	160	844	494	313	350	240	25	77	188
33SV5/1A..	22	180	844	494	313	350	240	25	78	200
33SV5..	22	180	844	494	313	350	240	25	78	200
33SV6/2A..	22	180	919	494	313	350	240	25	82	204
33SV6/1A..	30	200	919	657	402	400	317	25	89	304
33SV6..	30	200	919	657	402	400	317	25	89	304
33SV7/2A..	30	200	994	657	402	400	317	25	92	307
33SV7/1A..	30	200	994	657	402	400	317	25	92	307

PUMP TYPE	MOTOR		DIMENSIONS (mm)						WEIGHT kg	
	kW	SIZE	L1	L2	D1	D2	M	PN	PUMP	ELECTRIC PUMP
33SV7..	30	200	994	657	402	400	317	25	92	307
33SV8/2A..	37	200	1069	657	402	400	317	40	101	331
33SV8/1A..	37	200	1069	657	402	400	317	40	101	331
33SV8..	37	200	1069	657	402	400	317	40	101	331

33sv-2p60_c_td

GOULDS WATER TECHNOLOGY
a xylem brand

33SV SERIES
OPERATING CHARACTERISTICS AT 60 Hz, 2 POLES

33SV	~ 3500 [rpm]	ISO 9906 - Annex A

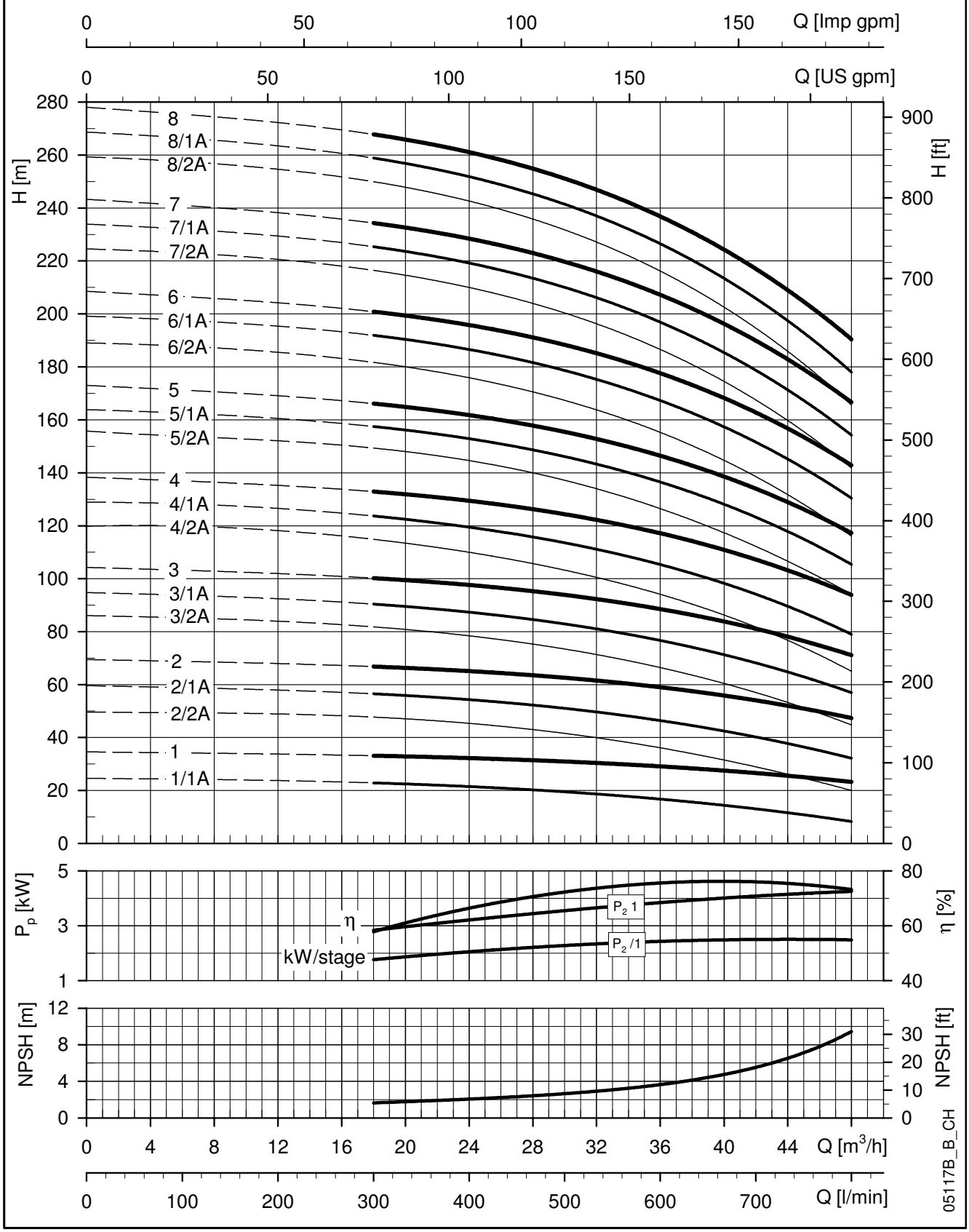

These performances are valid for liquids with density ρ = 1.0 Kg/dm³ and kinematic viscosity ν = 1 mm²/sec.

46SV SERIES
DIMENSIONS AND WEIGHTS AT 60 Hz, 2 POLES

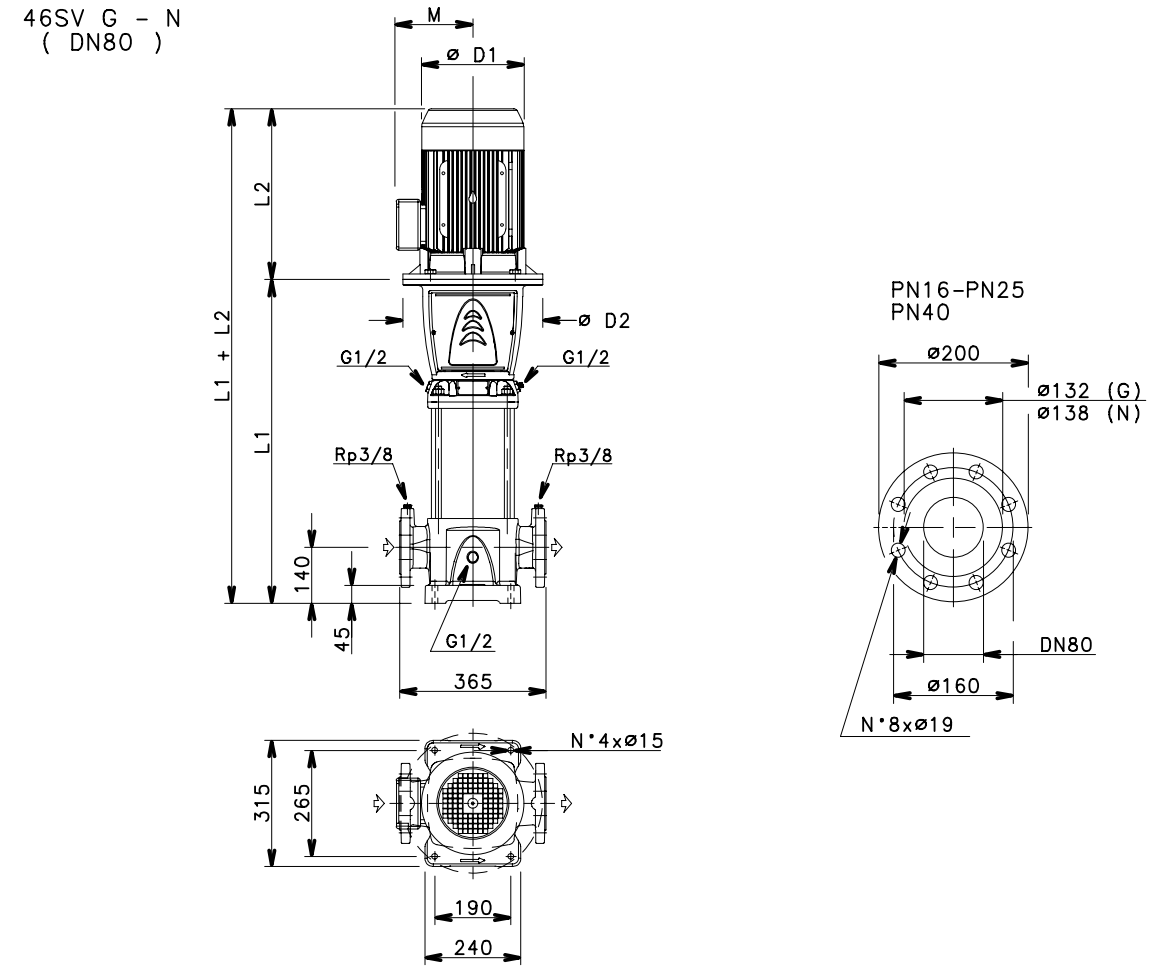

PUMP TYPE	MOTOR		DIMENSIONS (mm)						WEIGHT kg	
										ELECTRIC
	kW	SIZE	L1	L2	D1	D2	M	PN	PUMP	PUMP
46SV1/1A..	5,5	132	549	375	214	300	168	16	63	101
46SV1..	7,5	132	549	367	256	300	191	16	63	119
46SV2/2A..	11	160	659	428	256	350	191	16	70	141
46SV2/1A..	11	160	659	428	256	350	191	16	70	141
46SV2..	15	160	659	494	313	350	240	16	70	172
46SV3/2A..	18,5	160	734	494	313	350	240	16	74	185
46SV3/1A..	18,5	160	734	494	313	350	240	16	74	185
46SV3..	18,5	160	734	494	313	350	240	16	74	185
46SV4/2A..	22	180	809	494	313	350	240	16	79	201
46SV4/1A..	30	200	809	657	402	400	317	16	86	301
46SV4..	30	200	809	657	402	400	317	16	86	301
46SV5/2A..	30	200	884	657	402	400	317	25	90	305
46SV5/1A..	30	200	884	657	402	400	317	25	90	305
46SV5..	30	200	884	657	402	400	317	25	90	305
46SV6/2A..	37	200	959	657	402	400	317	25	94	324
46SV6/1A..	37	200	959	657	402	400	317	25	94	324
46SV6..	37	200	959	657	402	400	317	25	94	324
46SV7/2A..	45	225	1034	746	455	450	384	40	105	461
46SV7/1A..	45	225	1034	746	455	450	384	40	105	461

PUMP TYPE	MOTOR		DIMENSIONS (mm)						WEIGHT kg	
										ELECTRIC
	kW	SIZE	L1	L2	D1	D2	M	PN	PUMP	PUMP
46SV7..	45	225	1034	746	455	450	384	40	105	461

46sv-2p60_a_td

GOULDS WATER TECHNOLOGY
a xylem brand

46SV SERIES
OPERATING CHARACTERISTICS AT 60 Hz, 2 POLES

46SV	~ 3500 [rpm]	ISO 9906 - Annex A

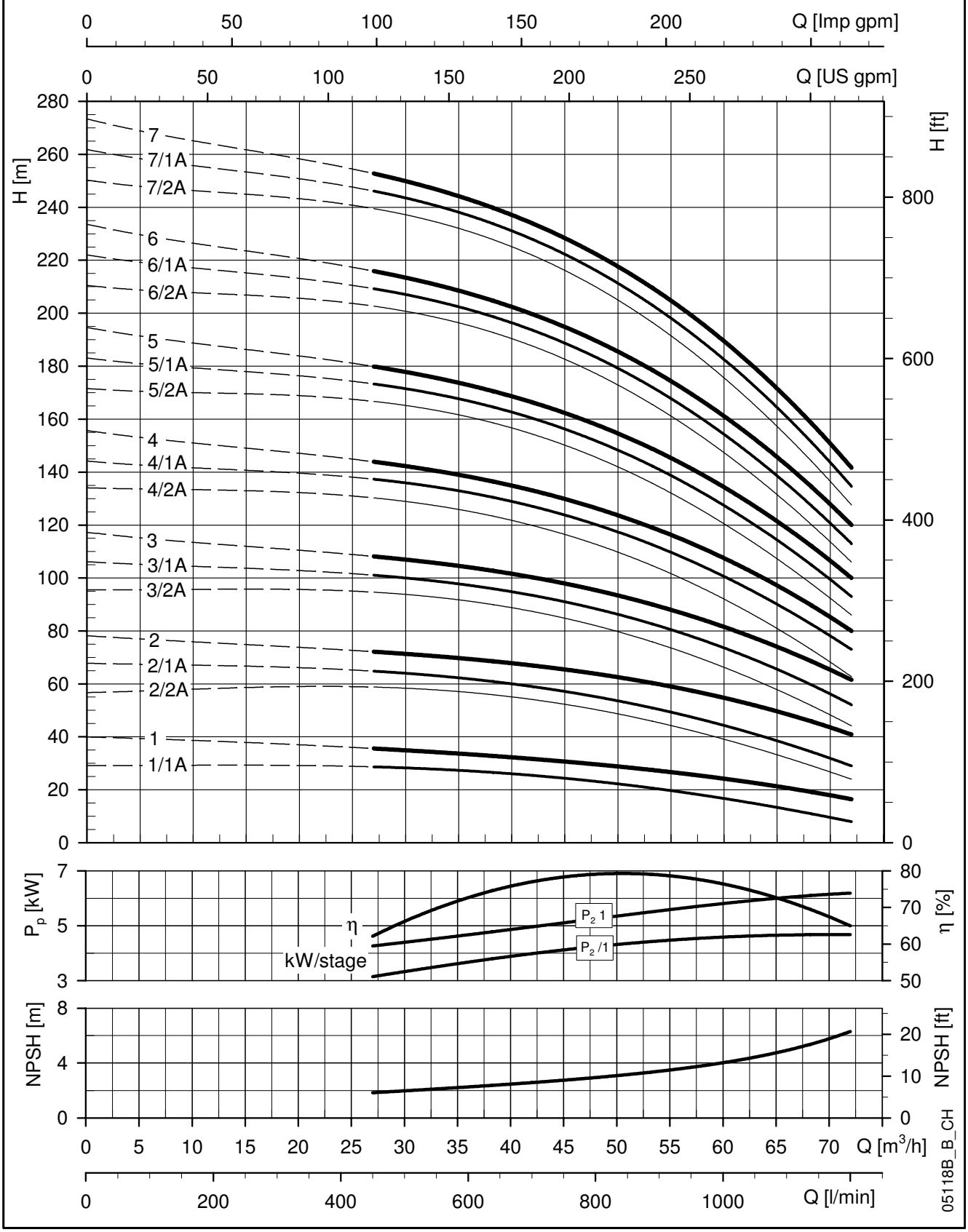

These performances are valid for liquids with density ρ = 1.0 Kg/dm³ and kinematic viscosity ν = 1 mm²/sec.

66SV SERIES
DIMENSIONS AND WEIGHTS AT 60 Hz, 2 POLES

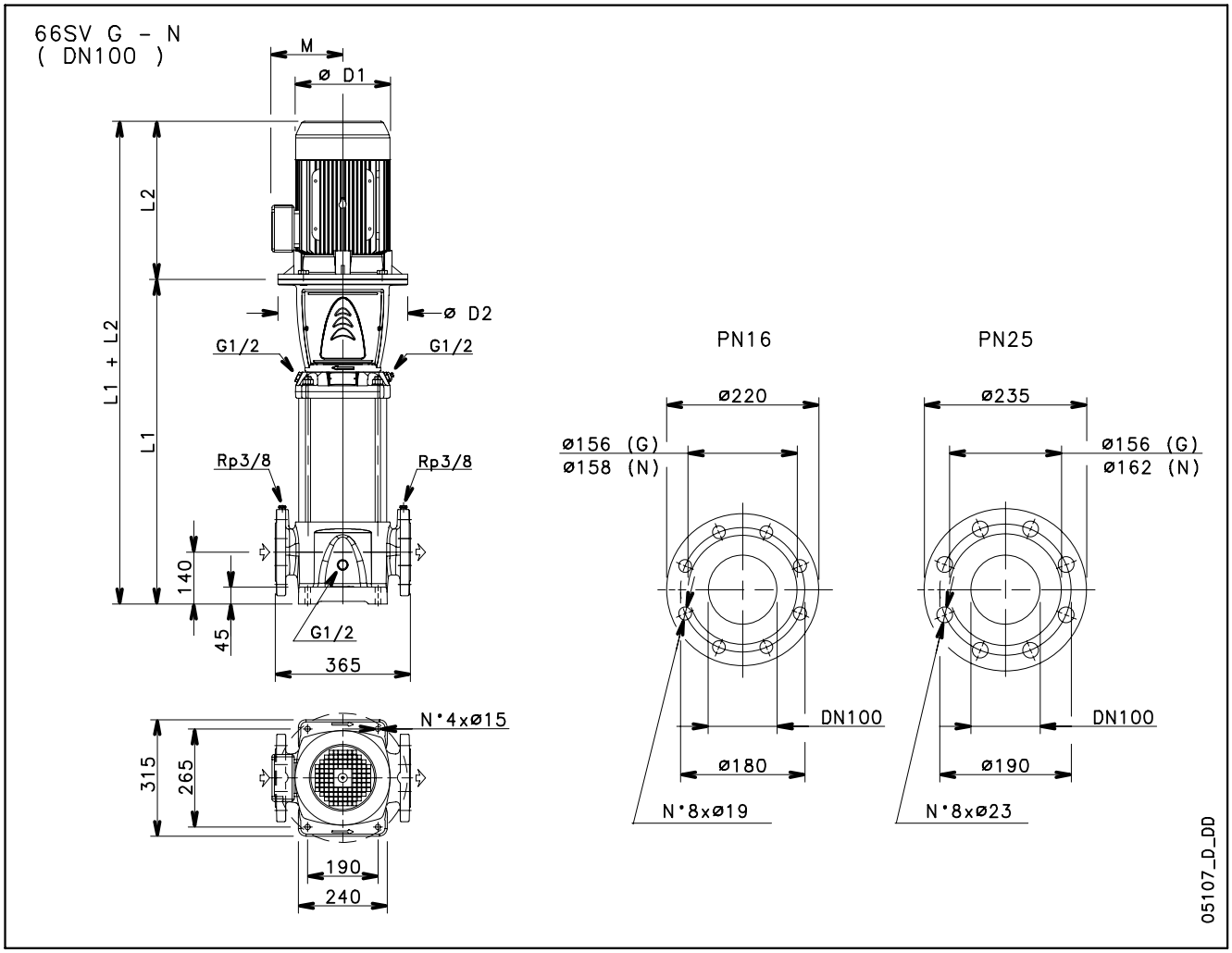

PUMP TYPE	MOTOR		DIMENSIONS (mm)						WEIGHT kg	
	kW	SIZE	L1	L2	D1	D2	M	PN	PUMP	ELECTRIC PUMP
66SV1/1A..	7,5	132	574	367	256	300	191	16	72	128
66SV1..	11	160	609	428	256	350	191	16	76	147
66SV2/2A..	15	160	699	494	313	350	240	16	81	183
66SV2/1A..	18,5	160	699	494	313	350	240	16	81	192
66SV2..	18,5	160	699	494	313	350	240	16	81	192
66SV3/2A..	22	180	789	494	313	350	240	16	87	209
66SV3/1A..	30	200	789	657	402	400	317	16	94	309
66SV3..	30	200	789	657	402	400	317	16	94	309
66SV4/2A..	37	200	879	657	402	400	317	16	100	330
66SV4/1A..	37	200	879	657	402	400	317	25	102	332
66SV4..	37	200	879	657	402	400	317	25	102	332
66SV5/2A..	45	225	969	746	455	450	384	25	111	467
66SV5/1A..	45	225	969	746	455	450	384	25	111	467
66SV5..	45	225	969	746	455	450	384	25	111	467

66sv-2p60_a_td

GOULDS WATER TECHNOLOGY
a xylem brand

66SV SERIES
OPERATING CHARACTERISTICS AT 60 Hz, 2 POLES

66SV	~ 3500 [rpm]	ISO 9906 - Annex A

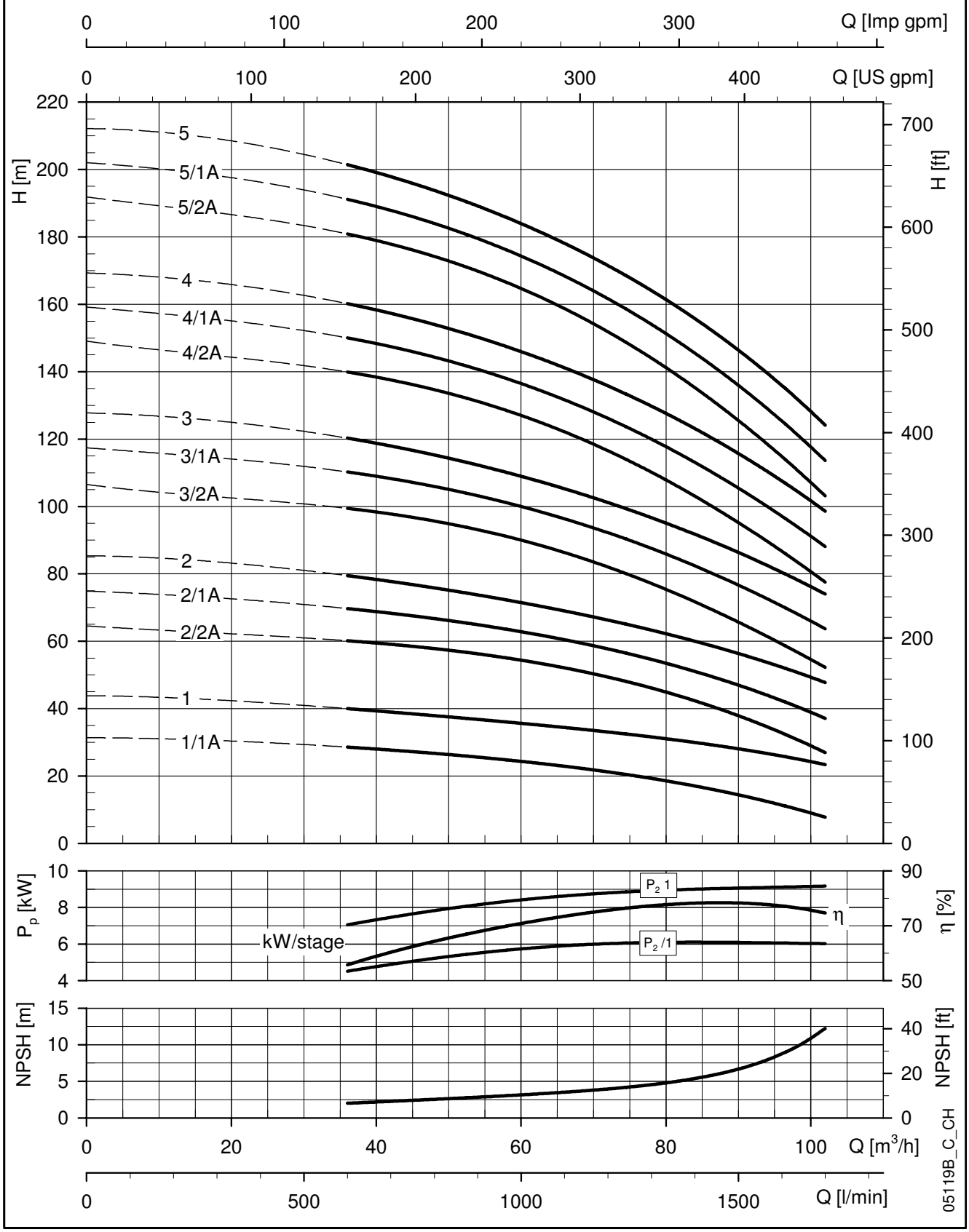

These performances are valid for liquids with density ρ = 1.0 Kg/dm³ and kinematic viscosity ν = 1 mm²/sec.

92SV SERIES
DIMENSIONS AND WEIGHTS AT 60 Hz, 2 POLES

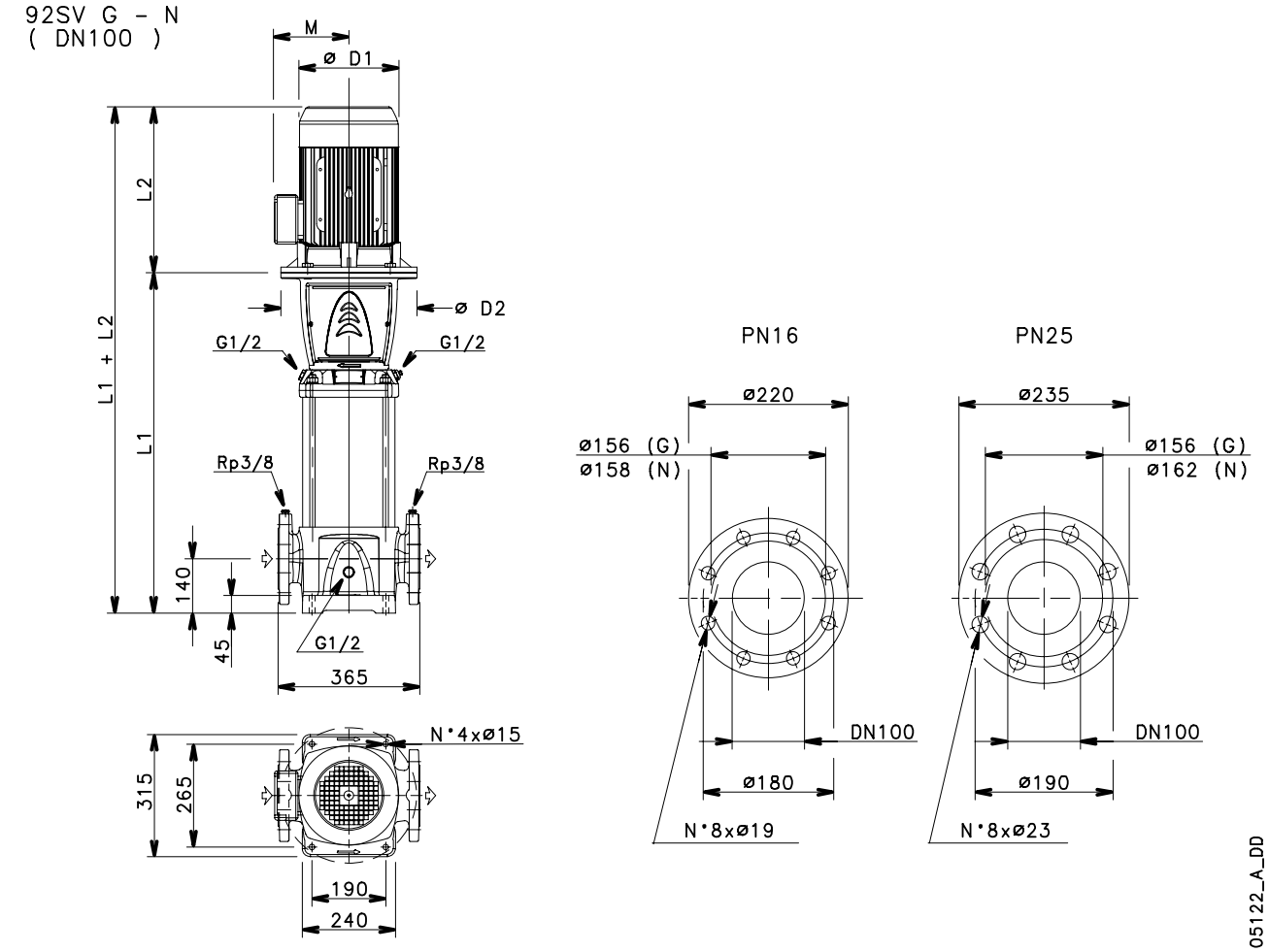

PUMP TYPE	MOTOR		DIMENSIONS (mm)						WEIGHT kg	
	kW	SIZE	L1	L2	D1	D2	M	PN	PUMP	ELECTRIC PUMP
92SV1/1A..	11	160	609	428	256	350	191	16	75	146
92SV1..	15	160	609	494	313	350	240	16	75	177
92SV2/2A..	18,5	160	699	494	313	350	240	16	80	191
92SV2/1A..	22	180	699	494	313	350	240	16	82	204
92SV2..	30	200	699	657	402	400	317	16	89	304
92SV3/2A..	37	200	789	657	402	400	317	16	94	324
92SV3/1A..	37	200	789	657	402	400	317	16	94	324
92SV3..	45	225	789	746	455	450	384	16	97	453
92SV4/2A..	45	225	879	746	455	450	384	16	103	459

92sv-2p60_a_td

GOULDS WATER TECHNOLOGY
a xylem brand

92SV SERIES
OPERATING CHARACTERISTICS AT 60 Hz, 2 POLES

92SV	~ 3500 [rpm]	ISO 9906 - Annex A

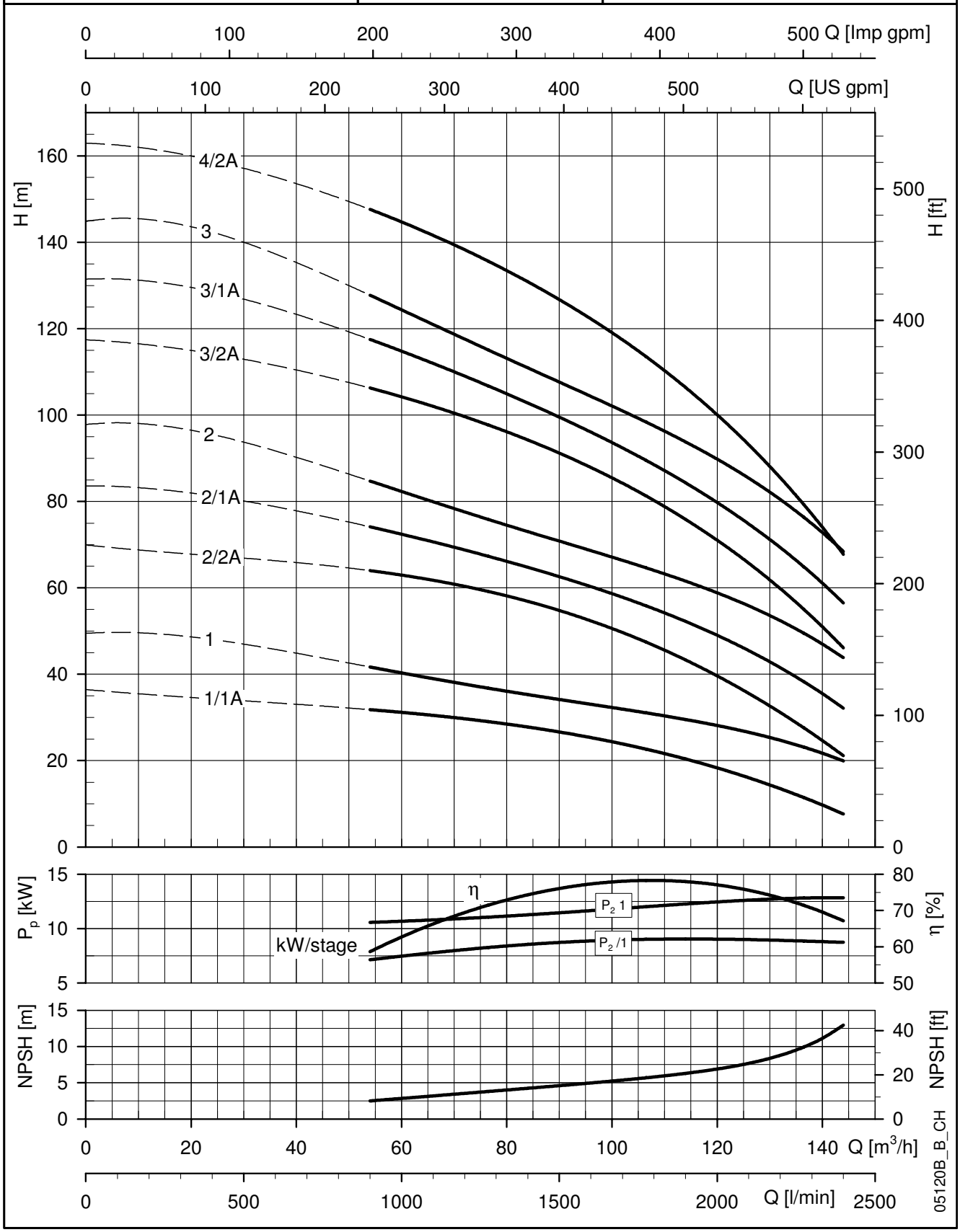

These performances are valid for liquids with density $\rho = 1.0$ Kg/dm^3 and kinematic viscosity $\nu = 1$ mm^2/sec.

125SV SERIES
DIMENSIONS AND WEIGHTS AT 60 Hz, 2 POLES

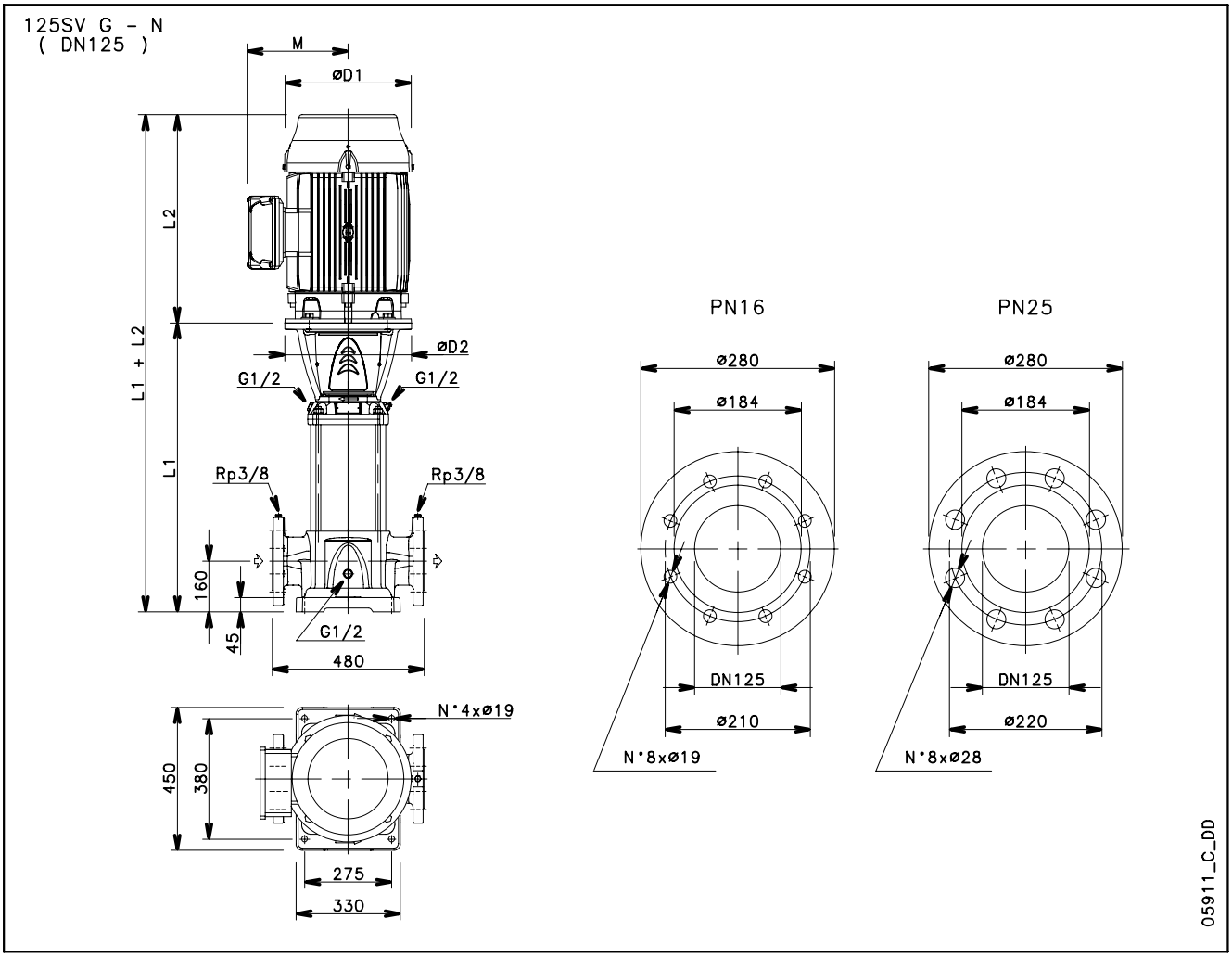

PUMP TYPE	MOTOR		DIMENSIONS (mm)						WEIGHT kg	
	kW	SIZE	L1	L2	D1	D2	M	PN	PUMP	ELECTRIC PUMP
125SV1..	15	160	728	494	313	350	240	16	120	222
125SV2/2A..	22	180	878	494	313	350	240	16	132	253
125SV3/3B..	30	200	1028	657	402	400	317	16	149	364
125SV3..	37	200	1028	657	402	400	317	16	150	380
125SV4/4A..	45	225	1178	746	455	450	384	16	164	520
125SV5/5A..	55	250	1358	825	486	550	402	25	189	639

125sv-2p60_b_td

GOULDS WATER TECHNOLOGY
a xylem brand

125SV SERIES
OPERATING CHARACTERISTICS AT 60 Hz, 2 POLES

125SV	~ 3500 [rpm]	ISO 9906 - Annex A

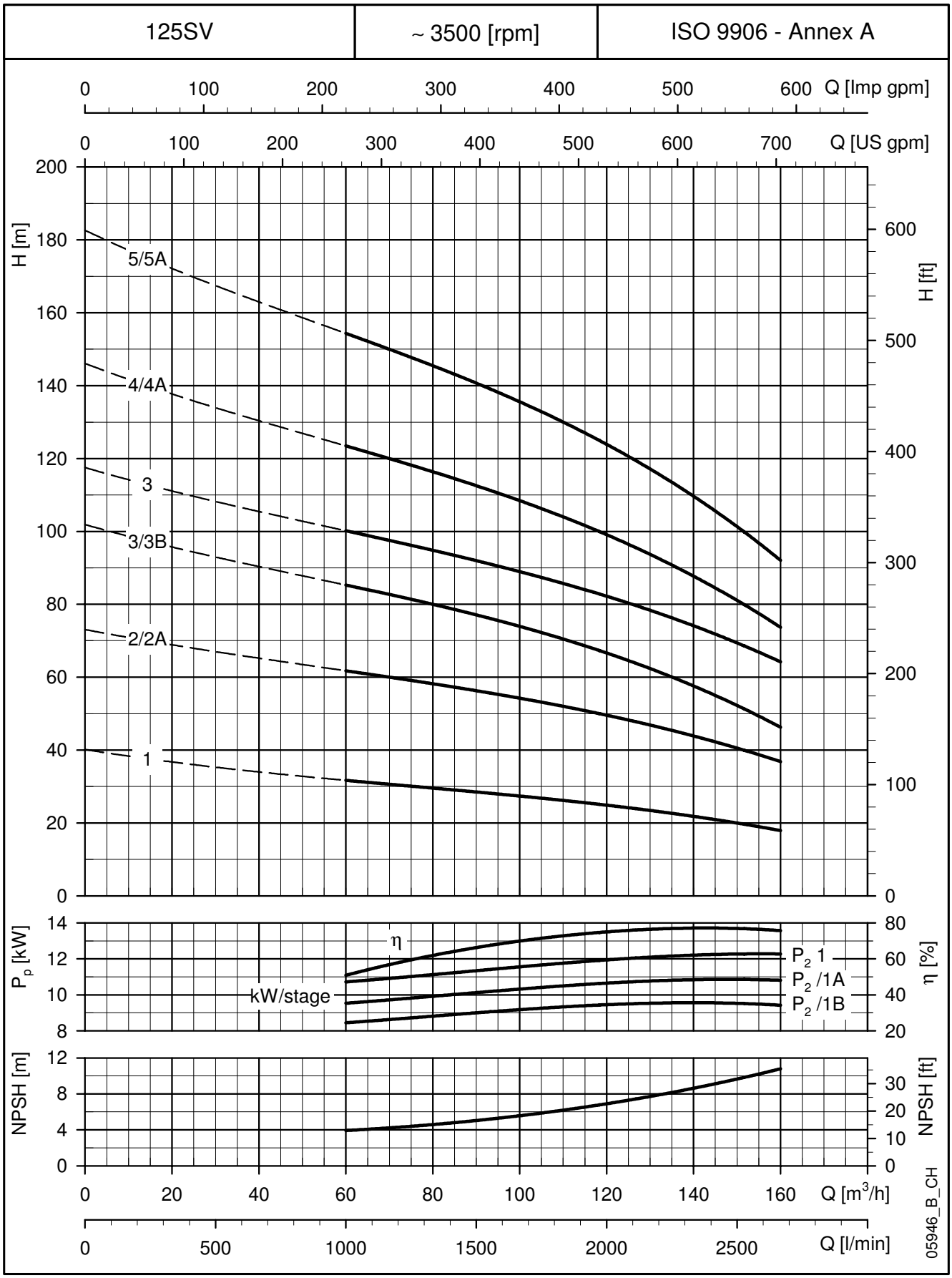

These performances are valid for liquids with density ρ = 1.0 Kg/dm³ and kinematic viscosity ν = 1 mm²/sec.

ACCESSORIES

Dimensions of counterflanges 52

Dimensions of Victaulic®, Clamp couplings 53

DIMENSIONS OF OVAL COUNTERFLANGES (T SV)

PUMP TYPE	DN	ø C	DIMENSIONS (mm) A	B	D	H	HOLES ø F	N°	PN
1-3SVT	25	Rp 1	75	12	100	22	11	2	16
5SVT	32	Rp 1¼	75	12	100	22	11	2	16
10SVT	40	Rp 1½	100	15	132	25	14	2	16
15-22SVT	50	Rp 2	100	15	132	25	14	2	16

1-22sv-ctf-ovali-en_a_td

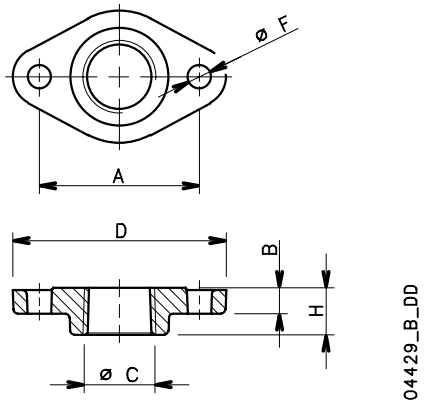

Standard supply (included with the pump)
- AISI 304L stainless steel (T versions).

DIMENSIONS OF ROUND THREADED COUNTERFLANGES (F, N, R, G SV) ACCORDING TO EN 1092-1

PUMP TYPE	DN	ø C	DIMENSIONS (mm) ø A	B	ø D	H	HOLES ø F	N°	PN
1-3SV	25	Rp 1	85	10	115	16	14	4	25
5SV	32	Rp 1¼	100	13	140	16	18	4	25
10SV	40	Rp 1½	110	14	150	19	18	4	25
15-22SV	50	Rp 2	125	16	165	24	18	4	25
33SV	65	Rp 2½	145	16	185	23	18	4	16
46SV	80	Rp 3	160	17	200	27	18	8	16
66SV-92SV	100	Rp 4	180	18	220	31	18	8	16

1-92sv-ctf-tonde-f-en_a_td

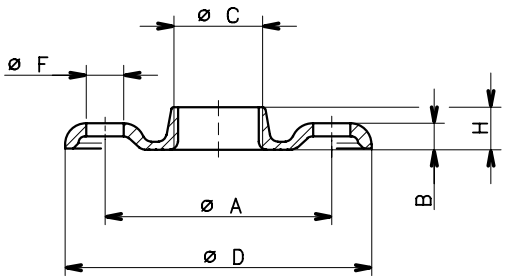

Round counterflanges Kit available on request:
Kit containing 2 counterflanges with bolts and gaskets.
- threaded, galvanized steel (F, R, G versions).
- threaded, AISI 316L stainless steel (N versions).

DIMENSIONS OF WELD-ON ROUND COUNTERFLANGES (G, N SV) ACCORDING TO EN 1092-1

PUMP TYPE	DN	ø C	DIMENSIONS (mm) ø A	B	ø D	HOLES ø F	N°	PN
33SV	65	77	145	18	185	18	4	16
46SV	80	90	160	20	200	18	8	16
66SV-92SV	100	115,5	180	22	220	18	8	16
125SV	125	141	210	24	250	18	8	16
33SV	65	77	145	24	185	18	8	25-40
46SV	80	90	160	26	200	18	8	25-40
66SV-92SV	100	115,5	190	26	235	22	8	25-40
125SV	125	141	220	28	270	25	8	25-40

33-125sv-ctf-tonde-s-en_a_td

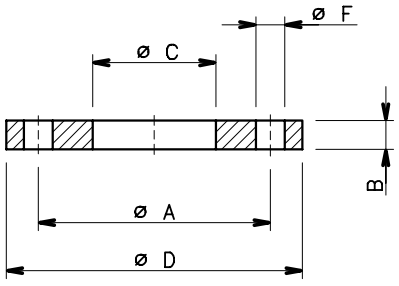

Round counterflanges Kit available on request:
Kit containing 2 counterflanges with bolts and gaskets.
- weld-on counterflanges, galvanized steel (G versions).
- weld-on counterflanges, AISI 316L stainless steel (N versions).

DIMENSIONS OF VICTAULIC® COUPLINGS (V SV)

WELD-ON SLEEVES

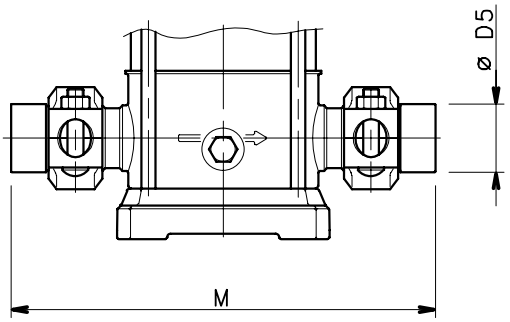

THREADED SLEEVES

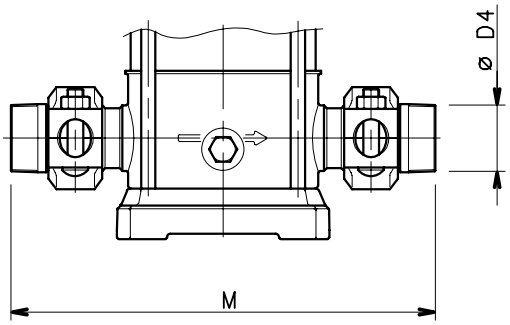

PUMP TYPE	ø D4	DIMENSIONS (mm) ø D5	M
1-3-5SV V	R 1¼	42,2	320
10-15-22SV V	R 2	60,3	378

1-22sv-giunti-vict-en_a_td

04427_B_DD

Victaulic® couplings kit available on request:
Victaulic® coupling with AISI 316L stainless steel weld-on or threaded sleeve, plus EPDM or FPM gasket.
Kits are available for the single version (1 coupling) or double version (2 couplings).

DIMENSIONS OF CLAMP COUPLINGS (C SV)

WELD-ON SLEEVES

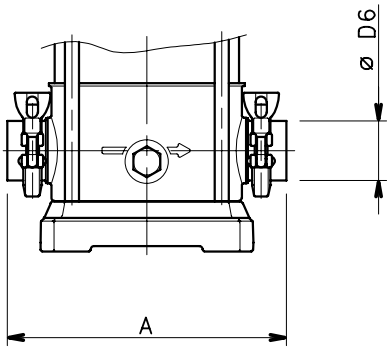

THREADED SLEEVES

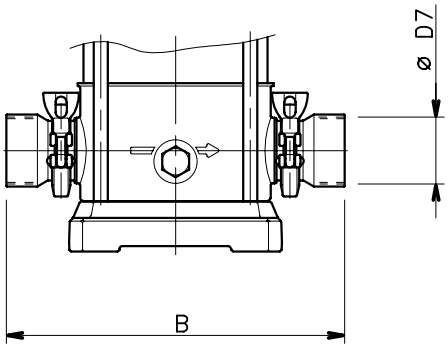

PUMP TYPE	DIMENSIONS (mm) A	B	ø D6	ø D7
1-3-5SV C	208	245	35	Rp 1¼
10-15-22SV C	248	301	53	Rp 2

1-22sv-giunti-clamp-en_a_td

04426_B_DD

Clamp couplings kit available on request:
Kit containing 2 Clamp couplings with AISI 316L stainless steel weld-on or threaded sleeve, plus EPDM or FPM gasket. Coupling shape and dimensions according to DIN 32676.

OTHER ACCESSORIES:

- **Dry running sensor**
Optical sensor for detecting the lack of water in order to prevent damage deriving from dry running.
This accessory can be applied at the filling tap.

- **i-ALERT™**
Patented i-ALERT™ monitor continuously measures vibration to support optimum performance.
Available **on request** on pumps < 7,5 kW (10 HP).

GOULDS WATER TECHNOLOGY
a xylem brand

SPECIAL VERSIONS ON REQUEST

More and more customers require specific solutions for satisfying particular application requirements.
To meet their needs, Goulds offers a series of variants for personalising the e-SV™ pumps.

- **High Pressure (50/60 Hz)**
  Water treatment industry - washing and cleaning
  - Versatile range
  - Long lasting performances
  - Easy installation and maintenance

- **Low NPSH (50/60 Hz)**
  Solving cavitation issues in installation
  - Consistent operation
  - Long lasting performances
  - Easy installation

- **High Temperature**
  Electric pumps for high temperature applications
  - **H** versions for temperature values up to 150°C
  - **B** "BOILER"versions for temperature values up to 180°C

- **e-SVH - e-SV™ with HYDROVAR®**
  An evolution of e-SV™ special version toward a variable speed intelligent system

- **4-POLE Version (50/60 Hz)**
  Silencious operation
  - Low level of noise
  - Wide range of performances
  - Increased performance with Hydrovar®

- **Reducing Footprint (50/60 Hz)**
  Space saving in installation
  - Compact design
  - Versatile design
  - High level performances

- **Passivated and electro-polished version**
  All e-SV™ pump components are passivated and electro-polished in order to reduce the risk of corrosion and to comply with specific hygiene requirements.

- **Horizontal Version (50/60 Hz)**
  Installation in reduced vertical space or in sismic area
  - Reduced vertical space
  - Easy installation

- **Motors**
  Wide range of high efficiency motors
  - 50 and 60 Hz
  - Wide range of voltages
  - Wide range of standard options

- **Protection sensor against dry running**
  Sensor for detecting the lack of liquid

- **i-ALERT™ - Conditional Monitoring**
  Reduce life cycle cost by increasing Mean Time between Failures (MTBF)

- **Certificates**
  List of the main tests and certificates available for e-SV™

- **Accessories**
  Wide range of accessories for connection and installation

- **Version with stainless steel base**
  The SV pump can be supplied with a stainless steel base for applications in aggressive conditions.

For more information, please see e-SV™ Special Versions catalogue.

GOULDS WATER TECHNOLOGY
a xylem brand

TECHNICAL APPENDIX

NPSH

The minimum operating values that can be reached at the pump suction end are limited by the onset of cavitation.

Cavitation is the formation of vapour-filled cavities within liquids where the pressure is locally reduced to a critical value, or where the local pressure is equal to, or just below the vapour pressure of the liquid.

The vapour-filled cavities flow with the current and when they reach a higher pressure area the vapour contained in the cavities condenses. The cavities collide, generating pressure waves that are transmitted to the walls. These, being subjected to stress cycles, gradually become deformed and yield due to fatigue. This phenomenon, characterized by a metallic noise produced by the hammering on the pipe walls, is called incipient cavitation.

The damage caused by cavitation may be magnified by electrochemical corrosion and a local rise in temperature due to the plastic deformation of the walls. The materials that offer the highest resistance to heat and corrosion are alloy steels, especially austenitic steel. The conditions that trigger cavitation may be assessed by calculating the total net suction head, referred to in technical literature with the acronym NPSH (Net Positive Suction Head).

The NPSH represents the total energy (expressed in m.) of the liquid measured at suction under conditions of incipient cavitation, excluding the vapour pressure (expressed in m.) that the liquid has at the pump inlet.

To find the static height hz at which to install the machine under safe conditions, the following formula must be verified:

hp + hz ≥ (NPSHr + 0.5) + hf + hpv ①

where:

hp is the absolute pressure applied to the free liquid surface in the suction tank, expressed in m. of liquid; hp is the quotient between the barometric pressure and the specific weight of the liquid.

hz is the suction lift between the pump axis and the free liquid surface in the suction tank, expressed in m.; hz is negative when the liquid level is lower than the pump axis.

hf is the flow resistance in the suction line and its accessories, such as: fittings, foot valve, gate valve, elbows, etc.

hpv is the vapour pressure of the liquid at the operating temperature, expressed in m. of liquid. hpv is the quotient between the Pv vapour pressure and the liquid's specific weight.

0,5 is the safety factor.

The maximum possible suction head for installation depends on the value of the atmospheric pressure (i.e. the elevation above sea level at which the pump is installed) and the temperature of the liquid.

To help the user, with reference to water temperature (4° C) and to the elevation above sea level, the following tables show the drop in hydraulic pressure head in relation to the elevation above sea level, and the suction loss in relation to temperature.

Water temperature (°C)	20	40	60	80	90	110	120
Suction loss (m)	0,2	0,7	2,0	5,0	7,4	15,4	21,5

Elevation above sea level (m)	500	1000	1500	2000	2500	3000
Suction loss (m)	0,55	1,1	1,65	2,2	2,75	3,3

Friction loss is shown in the tables at pages 58-59 of this catalogue. To reduce it to a minimum, especially in cases of high suction head (over 4-5 m.) or within the operating limits with high flow rates, we recommend using a suction line having a larger diameter than that of the pump's suction port.
It is always a good idea to position the pump as close as possible to the liquid to be pumped.

Make the following calculation:

Liquid: water at ~15°C $\gamma = 1$ kg/dm³
Flow rate required: 25 m³/h
Head for required delivery: 70 m.
Suction lift: 3,5 m.
The selection is an 33SVG075T pump whose NPSH required value is, at 25 m³/h, di 2 m.

For water at 15 °C

hp = Pa / γ = 10,33m, hpv = Pv / γ = 0,174m (0,01701 bar)

The Hf flow resistance in the suction line with foot valves is ~ 1,2 m.
By substituting the parameters in formula ① with the numeric values above, we have:

$10,33 + (-3,5) \geq (2 + 0,5) + 1,2 + 0,17$

from which we have: $6,8 > 3,9$

The relation is therefore verified.

VAPOUR PRESSURE
VAPOUR PRESSURE ps AND ρ DENSITY OF WATER TABLE

t	T	ps	ρ
°C	K	bar	kg/dm^3
0	273,15	0,00611	0,9998
1	274,15	0,00657	0,9999
2	275,15	0,00706	0,9999
3	276,15	0,00758	0,9999
4	277,15	0,00813	1,0000
5	278,15	0,00872	1,0000
6	279,15	0,00935	1,0000
7	280,15	0,01001	0,9999
8	281,15	0,01072	0,9999
9	282,15	0,01147	0,9998
10	283,15	0,01227	0,9997
11	284,15	0,01312	0,9997
12	285,15	0,01401	0,9996
13	286,15	0,01497	0,9994
14	287,15	0,01597	0,9993
15	288,15	0,01704	0,9992
16	289,15	0,01817	0,9990
17	290,15	0,01936	0,9988
18	291,15	0,02062	0,9987
19	292,15	0,02196	0,9985
20	293,15	0,02337	0,9983
21	294,15	0,24850	0,9981
22	295,15	0,02642	0,9978
23	296,15	0,02808	0,9976
24	297,15	0,02982	0,9974
25	298,15	0,03166	0,9971
26	299,15	0,03360	0,9968
27	300,15	0,03564	0,9966
28	301,15	0,03778	0,9963
29	302,15	0,04004	0,9960
30	303,15	0,04241	0,9957
31	304,15	0,04491	0,9954
32	305,15	0,04753	0,9951
33	306,15	0,05029	0,9947
34	307,15	0,05318	0,9944
35	308,15	0,05622	0,9940
36	309,15	0,05940	0,9937
37	310,15	0,06274	0,9933
38	311,15	0,06624	0,9930
39	312,15	0,06991	0,9927
40	313,15	0,07375	0,9923
41	314,15	0,07777	0,9919
42	315,15	0,08198	0,9915
43	316,15	0,09639	0,9911
44	317,15	0,09100	0,9907
45	318,15	0,09582	0,9902
46	319,15	0,10086	0,9898
47	320,15	0,10612	0,9894
48	321,15	0,11162	0,9889
49	322,15	0,11736	0,9884
50	323,15	0,12335	0,9880
51	324,15	0,12961	0,9876
52	325,15	0,13613	0,9871
53	326,15	0,14293	0,9862
54	327,15	0,15002	0,9862

t	T	ps	ρ
°C	K	bar	kg/dm^3
55	328,15	0,15741	0,9857
56	329,15	0,16511	0,9852
57	330,15	0,17313	0,9846
58	331,15	0,18147	0,9842
59	332,15	0,19016	0,9837
60	333,15	0,1992	0,9832
61	334,15	0,2086	0,9826
62	335,15	0,2184	0,9821
63	336,15	0,2286	0,9816
64	337,15	0,2391	0,9811
65	338,15	0,2501	0,9805
66	339,15	0,2615	0,9799
67	340,15	0,2733	0,9793
68	341,15	0,2856	0,9788
69	342,15	0,2984	0,9782
70	343,15	0,3116	0,9777
71	344,15	0,3253	0,9770
72	345,15	0,3396	0,9765
73	346,15	0,3543	0,9760
74	347,15	0,3696	0,9753
75	348,15	0,3855	0,9748
76	349,15	0,4019	0,9741
77	350,15	0,4189	0,9735
78	351,15	0,4365	0,9729
79	352,15	0,4547	0,9723
80	353,15	0,4736	0,9716
81	354,15	0,4931	0,9710
82	355,15	0,5133	0,9704
83	356,15	0,5342	0,9697
84	357,15	0,5557	0,9691
85	358,15	0,5780	0,9684
86	359,15	0,6011	0,9678
87	360,15	0,6249	0,9671
88	361,15	0,6495	0,9665
89	362,15	0,6749	0,9658
90	363,15	0,7011	0,9652
91	364,15	0,7281	0,9644
92	365,15	0,7561	0,9638
93	366,15	0,7849	0,9630
94	367,15	0,8146	0,9624
95	368,15	0,8453	0,9616
96	369,15	0,8769	0,9610
97	370,15	0,9094	0,9602
98	371,15	0,9430	0,9596
99	372,15	0,9776	0,9586
100	373,15	1,0133	0,9581
102	375,15	1,0878	0,9567
104	377,15	1,1668	0,9552
106	379,15	1,2504	0,9537
108	381,15	1,3390	0,9522
110	383,15	1,4327	0,9507
112	385,15	1,5316	0,9491
114	387,15	1,6362	0,9476
116	389,15	1,7465	0,9460
118	391,15	1,8628	0,9445

t	T	ps	ρ
°C	K	bar	kg/dm^3
120	393,15	1,9854	0,9429
122	395,15	2,1145	0,9412
124	397,15	2,2504	0,9396
126	399,15	2,3933	0,9379
128	401,15	2,5435	0,9362
130	403,15	2,7013	0,9346
132	405,15	2,867	0,9328
134	407,15	3,041	0,9311
136	409,15	3,223	0,9294
138	411,15	3,414	0,9276
140	413,15	3,614	0,9258
145	418,15	4,155	0,9214
155	428,15	5,433	0,9121
160	433,15	6,181	0,9073
165	438,15	7,008	0,9024
170	433,15	7,920	0,8973
175	448,15	8,924	0,8921
180	453,15	10,027	0,8869
185	458,15	11,233	0,8815
190	463,15	12,551	0,8760
195	468,15	13,987	0,8704
200	473,15	15,550	0,8647
205	478,15	17,243	0,8588
210	483,15	19,077	0,8528
215	488,15	21,060	0,8467
220	493,15	23,198	0,8403
225	498,15	25,501	0,8339
230	503,15	27,976	0,8273
235	508,15	30,632	0,8205
240	513,15	33,478	0,8136
245	518,15	36,523	0,8065
250	523,15	39,776	0,7992
255	528,15	43,246	0,7916
260	533,15	46,943	0,7839
265	538,15	50,877	0,7759
270	543,15	55,058	0,7678
275	548,15	59,496	0,7593
280	553,15	64,202	0,7505
285	558,15	69,186	0,7415
290	563,15	74,461	0,7321
295	568,15	80,037	0,7223
300	573,15	85,927	0,7122
305	578,15	92,144	0,7017
310	583,15	98,70	0,6906
315	588,15	105,61	0,6791
320	593,15	112,89	0,6669
325	598,15	120,56	0,6541
330	603,15	128,63	0,6404
340	613,15	146,05	0,6102
350	623,15	165,35	0,5743
360	633,15	186,75	0,5275
370	643,15	210,54	0,4518
374,15	647,30	221,20	0,3154

G-at_npsh_b_sc

TABLE OF FLOW RESISTANCE IN 100 m OF STRAIGHT CAST IRON PIPELINE (HAZEN-WILLIAMS FORMULA C=100)

FLOW RATE			NOMINAL DIAMETER in mm and inches																
m^3/h	l/min		15	20	25	32	40	50	65	80	100	125	150	175	200	250	300	350	400
			1/2"	3/4"	1"	1 1/4"	1 1/2"	2	2 1/2"	3"	4"	5"	6"	7"	8"	10"	12"	14"	16"
0,6	10	v	0,94	0,53	0,34	0,21	0,13												
		hr	16	3,94	1,33	0,40	0,13												
0,9	15	v	1,42	0,80	0,51	0,31	0,20												
		hr	33,9	8,35	2,82	0,85	0,29												
1,2	20	v	1,89	1,06	0,68	0,41	0,27	0,17											
		hr	57,7	14,21	4,79	1,44	0,49	0,16											
1,5	25	v	2,36	1,33	0,85	0,52	0,33	0,21											
		hr	87,2	21,5	7,24	2,18	0,73	0,25											
1,8	30	v	2,83	1,59	1,02	0,62	0,40	0,25											
		hr	122	30,1	10,1	3,05	1,03	0,35											
2,1	35	v	3,30	1,86	1,19	0,73	0,46	0,30											
		hr	162	40,0	13,5	4,06	1,37	0,46											
2,4	40	v		2,12	1,36	0,83	0,53	0,34	0,20										
		hr		51,2	17,3	5,19	1,75	0,59	0,16										
3	50	v		2,65	1,70	1,04	0,66	0,42	0,25										
		hr		77,4	26,1	7,85	2,65	0,89	0,25										
3,6	60	v		3,18	2,04	1,24	0,80	0,51	0,30										
		hr		108	36,6	11,0	3,71	1,25	0,35										
4,2	70	v		3,72	2,38	1,45	0,93	0,59	0,35										
		hr		144	48,7	14,6	4,93	1,66	0,46										
4,8	80	v		4,25	2,72	1,66	1,06	0,68	0,40										
		hr		185	62,3	18,7	6,32	2,13	0,59										
5,4	90	v			3,06	1,87	1,19	0,76	0,45	0,30									
		hr			77,5	23,3	7,85	2,65	0,74	0,27									
6	100	v			3,40	2,07	1,33	0,85	0,50	0,33									
		hr			94,1	28,3	9,54	3,22	0,90	0,33									
7,5	125	v			4,25	2,59	1,66	1,06	0,63	0,41									
		hr			142	42,8	14,4	4,86	1,36	0,49									
9	150	v				3,11	1,99	1,27	0,75	0,50	0,32								
		hr				59,9	20,2	6,82	1,90	0,69	0,23								
10,5	175	v				3,63	2,32	1,49	0,88	0,58	0,37								
		hr				79,7	26,9	9,07	2,53	0,92	0,31								
12	200	v				4,15	2,65	1,70	1,01	0,66	0,42								
		hr				102	34,4	11,6	3,23	1,18	0,40								
15	250	v				5,18	3,32	2,12	1,26	0,83	0,53	0,34							
		hr				154	52,0	17,5	4,89	1,78	0,60	0,20							
18	300	v					3,98	2,55	1,51	1,00	0,64	0,41							
		hr					72,8	24,6	6,85	2,49	0,84	0,28							
24	400	v					5,31	3,40	2,01	1,33	0,85	0,54	0,38						
		hr					124	41,8	11,66	4,24	1,43	0,48	0,20						
30	500	v					6,63	4,25	2,51	1,66	1,06	0,68	0,47						
		hr					187	63,2	17,6	6,41	2,16	0,73	0,30						
36	600	v						5,10	3,02	1,99	1,27	0,82	0,57	0,42					
		hr						88,6	24,7	8,98	3,03	1,02	0,42	0,20					
42	700	v						5,94	3,52	2,32	1,49	0,95	0,66	0,49					
		hr						118	32,8	11,9	4,03	1,36	0,56	0,26					
48	800	v						6,79	4,02	2,65	1,70	1,09	0,75	0,55					
		hr						151	42,0	15,3	5,16	1,74	0,72	0,34					
54	900	v						7,64	4,52	2,99	1,91	1,22	0,85	0,62					
		hr						188	52,3	19,0	6,41	2,16	0,89	0,42					
60	1000	v							5,03	3,32	2,12	1,36	0,94	0,69	0,53				
		hr							63,5	23,1	7,79	2,63	1,08	0,51	0,27				
75	1250	v							6,28	4,15	2,65	1,70	1,18	0,87	0,66				
		hr							96,0	34,9	11,8	3,97	1,63	0,77	0,40				
90	1500	v							7,54	4,98	3,18	2,04	1,42	1,04	0,80				
		hr							134	48,9	16,5	5,57	2,29	1,08	0,56				
105	1750	v							8,79	5,81	3,72	2,38	1,65	1,21	0,93				
		hr							179	65,1	21,9	7,40	3,05	1,44	0,75				
120	2000	v								6,63	4,25	2,72	1,89	1,39	1,06	0,68			
		hr								83,3	28,1	9,48	3,90	1,84	0,96	0,32			
150	2500	v								8,29	5,31	3,40	2,36	1,73	1,33	0,85			
		hr								126	42,5	14,3	5,89	2,78	1,45	0,49			
180	3000	v									6,37	4,08	2,83	2,08	1,59	1,02	0,71		
		hr									59,5	20,1	8,26	3,90	2,03	0,69	0,28		
210	3500	v									7,43	4,76	3,30	2,43	1,86	1,19	0,83		
		hr									79,1	26,7	11,0	5,18	2,71	0,91	0,38		
240	4000	v									8,49	5,44	3,77	2,77	2,12	1,36	0,94		
		hr									101	34,2	14,1	6,64	3,46	1,17	0,48		
300	5000	v										6,79	4,72	3,47	2,65	1,70	1,18		
		hr										51,6	21,2	10,0	5,23	1,77	0,73		
360	6000	v										8,15	5,66	4,16	3,18	2,04	1,42		
		hr										72,3	29,8	14,1	7,33	2,47	1,02		
420	7000	v											6,61	4,85	3,72	2,38	1,65	1,21	
		hr											39,6	18,7	9,75	3,29	1,35	0,64	
480	8000	v											7,55	5,55	4,25	2,72	1,89	1,39	
		hr											50,7	23,9	12,49	4,21	1,73	0,82	
540	9000	v											8,49	6,24	4,78	3,06	2,12	1,56	1,19
		hr											63,0	29,8	15,5	5,24	2,16	1,02	0,53
600	10000	v												6,93	5,31	3,40	2,36	1,73	1,33
		hr												36,2	18,9	6,36	2,62	1,24	0,65

The hr values must be multiplied by:
0,71 for galvanized or painted steel pipes
0,54 for stainless steel or copper pipes
0,47 for PVC or PE pipes

G-at-pct-en_a_th

hr = flow resistance for 100 m of straight pipeline (m)
V = water speed (m/s)

FLOW RESISTANCE
TABLE OF FLOW RESISTANCE IN BENDS, VALVES AND GATES

The flow resistance is calculated using the equivalent pipeline length method according to the table below:

ACCESSORY TYPE	DN											
	25	32	40	50	65	80	100	125	150	200	250	300
	Equivalent pipeline length (m)											
45° bend	0,2	0,2	0,4	0,4	0,6	0,6	0,9	1,1	1,5	1,9	2,4	2,8
90° bend	0,4	0,6	0,9	1,1	1,3	1,5	2,1	2,6	3,0	3,9	4,7	5,8
90° smooth bend	0,4	0,4	0,4	0,6	0,9	1,1	1,3	1,7	1,9	2,8	3,4	3,9
Union tee or cross	1,1	1,3	1,7	2,1	2,6	3,2	4,3	5,3	6,4	7,5	10,7	12,8
Gate	-	-	-	0,2	0,2	0,2	0,4	0,4	0,6	0,9	1,1	1,3
Non return valve	1,1	1,5	1,9	2,4	3,0	3,4	4,7	5,9	7,4	9,6	11,8	13,9

G-a-pcv-en_a_th

The table is valid for the Hazen Williams coefficient C=100 (cast iron pipework);
for steel pipework, multiply the values by 1,41;
for stainless steel, copper and coated cast iron pipework, multiply the values by 1,85;
When the **equivalent pipeline length** has been determined, the flow resistance is obtained from the table of flow resistance.
The values given are guideline values which are bound to vary slightly according to the model, especially for gate valves and non-return valves, for which it is a good idea to check the values supplied by manufacturers.

VOLUMETRIC CAPACITY

Litres per minute l/min	Cubic metres per hour m^3/h	Cubic feet per hour ft^3/h	Cubic feet per minute ft^3/min	Imp. gal. per minute Imp. gal/min	US gal. per minute Us gal./min
1,0000	0,0600	2,1189	0,0353	0,2200	**0,2642**
16,6667	**1,0000**	35,3147	0,5886	3,6662	4,4029
0,4719	0,0283	**1,0000**	0,0167	0,1038	**0,1247**
28,3168	1,6990	60,0000	**1,0000**	6,2288	7,4805
4,5461	0,2728	9,6326	0,1605	**1,0000**	1,2009
3,7854	0,2271	8,0208	0,1337	0,8327	**1,0000**

PRESSURE AND HEAD

Newton per square metre N/m^2	kilo Pascal kPa	bar bar	Pound force per square inch psi	metre of water m H_2O	millimetre of mercury mm Hg
1,0000	0,0010	1×10^{-5}	1.45×10^{-4}	1.02×10^{-4}	**0,0075**
1000,0000	**1,0000**	0,0100	0,1450	0,1020	7,5006
1×10^5	100,0000	**1,0000**	14,5038	10,1972	**750,0638**
6894,7570	6,8948	0,0689	**1,0000**	0,7031	**51,7151**
9806,6500	9,8067	0,0981	1,4223	**1,0000**	**73,5561**
133,3220	0,1333	0,0013	0,0193	0,0136	**1,0000**

LENGTH

millimetre mm	centimetre cm	metre m	inch in	foot ft	yard yd
1,0000	0,1000	0,0010	0,0394	0,0033	**0,0011**
10,0000	**1,0000**	0,0100	0,3937	0,0328	0,0109
1000,0000	100,0000	**1,0000**	39,3701	3,2808	**1,0936**
25,4000	2,5400	0,0254	**1,0000**	0,0833	0,0278
304,8000	30,4800	0,3048	12,0000	**1,0000**	**0,3333**
914,4000	91,4400	0,9144	36,0000	3,0000	**1,0000**

VOLUME

cubic metre m^3	litre litro	millilitre ml	imp. Gallon imp. gal.	US gallon US gal.	cubic foot ft^3
1,0000	1000,0000	1×10^6	219,9694	264,1720	**35,3147**
0,0010	**1,0000**	1000,0000	0,2200	0,2642	0,0353
1×10^{-6}	0,0010	**1,0000**	2.2×10^{-4}	2.642×10^{-4}	3.53×10^{-5}
0,0045	4,5461	4546,0870	**1,0000**	1,2009	0,1605
0,0038	3,7854	3785,4120	0,8327	**1,0000**	**0,1337**
0,0283	28,3168	28316,8466	6,2288	7,4805	**1,0000**

G-at_pp-en_a_sc

Xylem |'zīləm|

1) The tissue in plants that brings water upward from the roots;
2) a leading global water technology company.

We're 12,000 people unified in a common purpose: creating innovative solutions to meet our world's water needs. Developing new technologies that will improve the way water is used, conserved, and re-used in the future is central to our work. We move, treat, analyze, and return water to the environment, and we help people use water efficiently, in their homes, buildings, factories and farms. In more than 150 countries, we have strong, long-standing relationships with customers who know us for our powerful combination of leading product brands and applications expertise, backed by a legacy of innovation.

For more information on how Xylem can help you, go to xyleminc.com.

GOULDS WATER TECHNOLOGY
a xylem brand

Headquarters

XYLEM WATER SYSTEMS USA LLC
1 Goulds Drive
Auburn, NY 13021 - U.S.A.
Phone: +1 (800) 453-6777
Fax: +1 (888) 322-5877

Goulds is a registered trademark of Goulds Pumps.Inc and is used under license.
© 2012 Xylem Inc.