Bell & Gossett
a xylem brand

INSTRUCTION MANUAL
HS-619
REVISION B

Hoffman Specialty® Series 754 Self-Contained Pressure Reducing Regulator

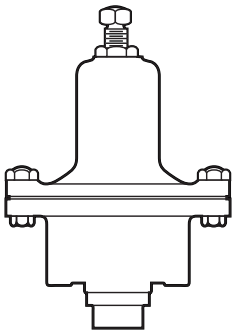

For Steam Service

Maximum Body Pressure 250 Psig (17.3 bar)
Maximum Temperature 406°F (208°C)

⚠ WARNING

- **Before using product, read and understand instructions.**
- **Save these instructions for future reference.**
- **All work must be performed by qualified personnel trained in the proper application, installation, and maintenance of steam systems in accordance with all applicable codes and ordinances.**
- **To prevent serious burns, wear heat resistant gloves when opening and closing steam valves, or handling hot equipment.**
- **To prevent serious burns, the internal pressure of the regulator must be 0 psi (0 bar) before servicing.**
- **Connect a pipe to the blow down valve in such a way as to prevent exposure and injury from discharge.**
- **To prevent property damage, personal injury, or death, cap off the gate valves if they are not connected to a drain and when they are not in use for test or pressure relief.**

Failure to follow this warning could cause property damage, personal injury or death.

IMPORTANT: To prevent system damage from water hammer or sudden shock, open supply valves slowly.

If you are uncertain about the product's adaptability for your application, please call the factory or authorized representative before using the product.

INSTALLATION

1. Determine where to install the regulator, based on the following requirements:

a. The regulator must be installed where it can be accessed for adjustment and repair.

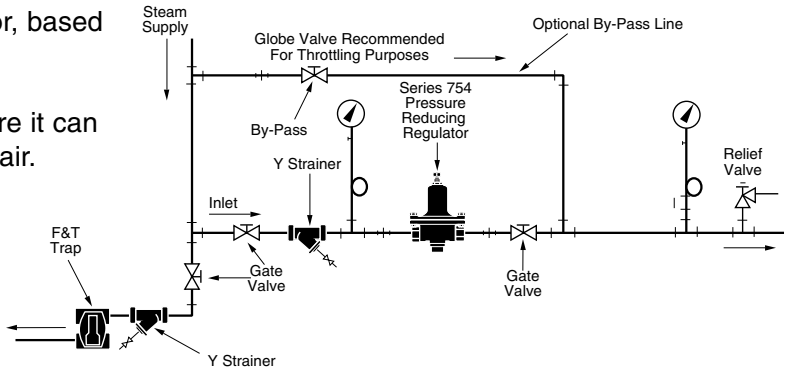

2. Install the following ahead of where the regulator will be installed.

a. A drip trap (A), Y-strainer (P) and gate valve (R). This insures dry steam.

b. A gate valve (C), Y-strainer (H), pressure gauge (D), and union (E) in the inlet piping (F).

c. Install a gate valve (G) in the Y-strainer (H) for blow down.

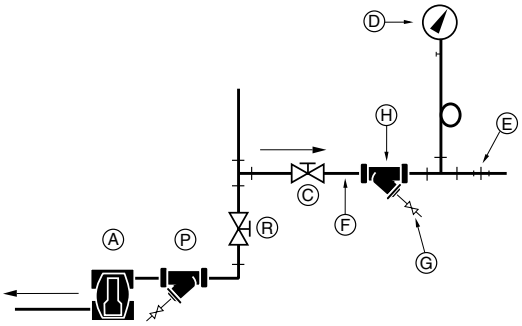

⚠ WARNING

- **To prevent serious burns, the internal pressure of the regulator must be 0 psi (0 bar) before servicing.**
- **Connect a pipe to the blow down valve in such a way as to prevent exposure and injury from discharge.**

Failure to follow this caution will cause personal injury.

3 a. Cap off the outlet pipe (J).

b. Open the Y-strainer's blow down gate valve (G).

c. Slowly turn steam on with full pressure for five (5) minutes to blow down the inlet pipe (F).

d. Turn off steam and allow pipe to cool.

e. Remove cap from the outlet pipe (J) and close the Y-strainer's blow down gate valve (G).

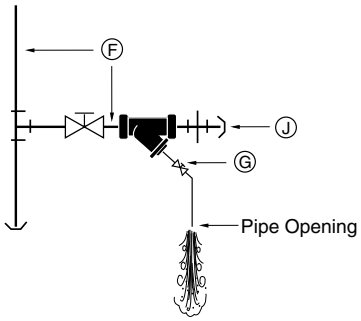

4 a. Position and install the Series 754 Regulator (B) with the adjusting screw (H) on top.

b. Install a union (E), a gate valve (J), and a pressure gauge (D) in the outlet piping (F).

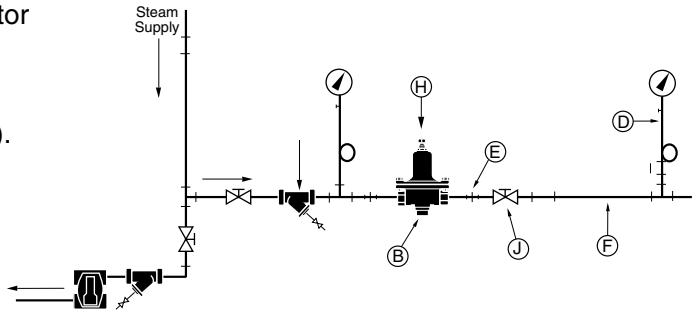

5. Optional
Install bypass line (K) with a globe valve (L), for manual regulation during servicing.

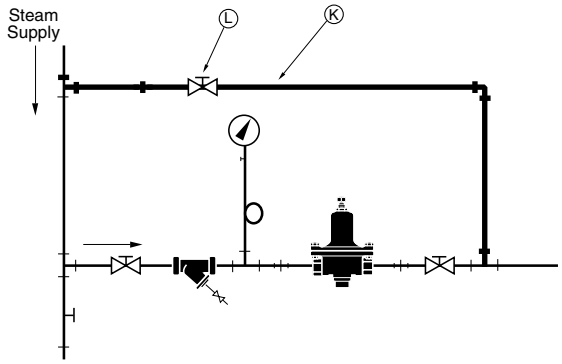

6. Install a steam pressure relief valve (M). Check to make sure that the set point is correct:

Systems	**Relief Valve Setting**
Up to 35 psig (2.4 bar)	At least 5 psi (.35 bar) higher than outlet pressure.
Over 35 psig (2.4 bar)	At least 10 psi higher than higher than outlet pressure.

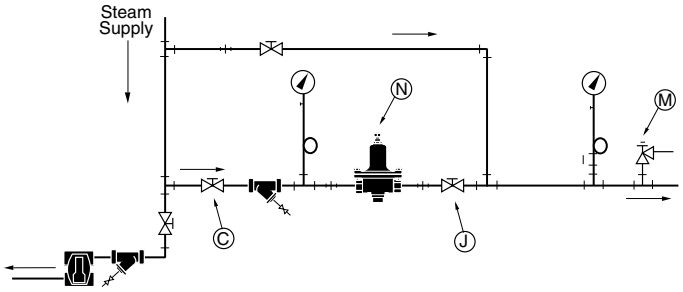

7. Check to make sure that the adjusting screw (N) is backed out counterclockwise to relieve spring tension. Slowly open gate valve (C) and observe for leaks.

8. Slowly open the outlet gate valve (J). Turn the adjusting screw (N) clockwise to increase pressure to the set point. Allow the system to stabilize. When set, tighten the regulating screw locknut.

INSTALLATION COMPLETE

MAINTENANCE SCHEDULE:

- Initially, every 2-3 days after start-up until system is clean.
- Every 6 months thereafter.

PROCEDURE:

⚠ WARNING

- **To prevent serious burns, the internal pressure of the regulator must be 0 psi (0 bar) before servicing.**

- **Connect a pipe to the blow down valve in such a way as to prevent exposure and injury from discharge.**

Failure to follow this caution will cause personal injury.

1. Inspect joints for leaks. Stop all leaks by tightening bolts.
2. Clean strainers by opening the Y-strainer's blow down gate valve and allowing full steam pressure to flow out for (2) two minutes. Then, close the valve.
3. If steam escapes from the vent hole in the spring housing area, replace the diaphragms.

TROUBLESHOOTING

We recommend replacing the Series 754 Regulator when parts no longer operate properly. A new regulator is more economical than repairing or replacing individual parts, and it will provide greater reliability.

Problem:

1. **Inadequate outlet pressure.**

   a. **Cause:** The regulator is not adjusted properly.

   Solution: Loosen the locknut on the adjusting screw and turn it counterclockwise.

   b. **Cause:** Dirt in the strainer.

   Solution: Open the Y-strainer's blow down gate valve and allow full steam pressure to flow for two minutes.

   c. **Cause:** Steam supply pressure is low.

   Solution: Correct boiler steam pressure problem.

   d. **Cause:** Dirt under the seat, or the seat is worn.

   Solution: Disassemble regulator and inspect, replace if necessary.

xylem
Let's Solve Water

Xylem Inc.
8200 N. Austin Avenue
Morton Grove, Illinois 60053
Phone: (847) 966-3700
Fax: (847) 965-8379
www.xyleminc.com/brands/bellgossett

Bell & Gossett is a trademark of Xylem Inc. or one of its subsidiaries.
© 2012 Xylem Inc. HS-619B October 2012 Part No. 511140