50 Hz

GDOC - GDIWA - GDOMO GDOMO GRI - GDN - GGDL Series

DRAINAGE AND SEWAGE
ELECTRIC PUMPS

GOULDS WATER TECHNOLOGY
a xylem brand

Cod. G91004441 Rev.C Ed.01/2018

GDOC - GDIWA - GGDOMO - GGDOMO GRI
GDN - GDL SERIES
HYDRAULIC PERFORMANCE RANGE AT 50 Hz

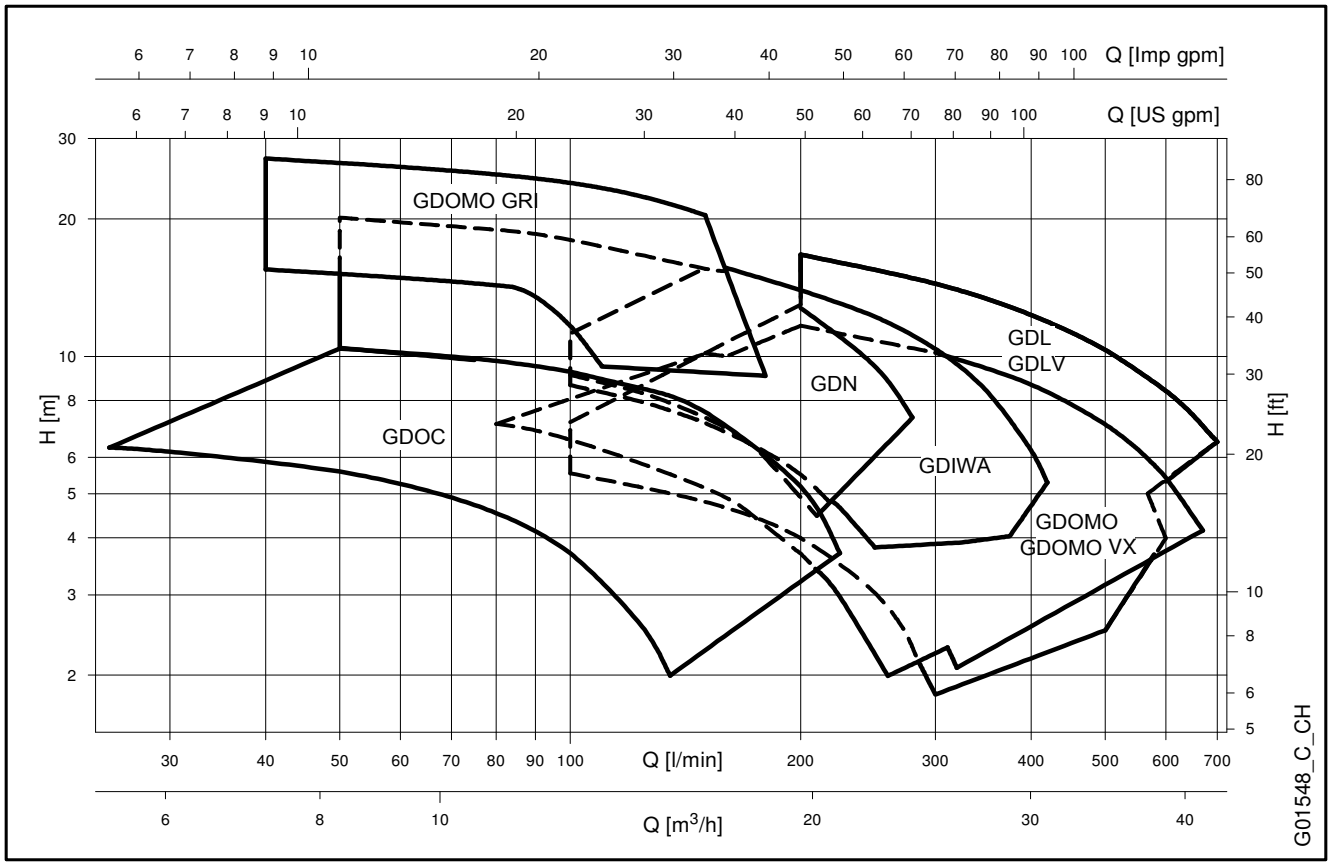

GOULDS WATER TECHNOLOGY
a xylem brand

CONTENTS

GDOC Series **5**

Series Specifications **5**

List of models and Table of Materials **7**

Operating Characteristics **8**

Dimensions and Weights **9**

GDIWA Series **11**

Series Specifications **11**

List of models and Table of Materials **13**

Mechanical seal **14**

Operating Characteristics **15**

Dimensions and Weights **16**

GGDOMO and GGDOMO GRI Series **19**

GGDOMO Series Specifications **19**

GDOMO GRI Series Specifications **20**

GDOMO Series List of models and Table of Materials **22**

GDOMO GRI Series List of models and Table of Materials **23**

GDOMO - GDOMO GRI Series Mechanical seal **24**

GDOMO Series Operating Characteristics **25**

GDOMO GRI Series Operating Characteristics **27**

GDOMO Series Dimensions and Weights **28**

GDOMO GRI Series Dimensions and Weights **31**

CONTENTS

GDN Series **33**

Series Specifications **33**

List of models and Table of Materials **35**

Mechanical seal **36**

Operating Characteristics **37**

Dimensions and Weights **38**

GDL Series **39**

Series Specifications **39**

List of models and Table of Materials **41**

Mechanical seal **43**

Operating Characteristics **45**

Dimensions and Weights **47**

Technical Appendix **49**

GOULDS WATER TECHNOLOGY
a xylem brand

Submersible Electric Pumps for drainage of clean and dirty water

GDOC pumps are versatile, corrosion-resistant and compact.
Three basic versions are available with 0,25 to 0,55 kW power.
A GDOC 7VX version with Vortex impeller is available.

GDOC Series

APPLICATIONS

- Emptying of residential sump pits, rainwater tanks or laundry drainage.
- Garden and lawn irrigation, with suction from rainwater tanks.
- Emergency draining of flooded basements and garages.
- Transfer of water from tanks and basins.

SPECIFICATIONS

- **Maximum liquid temperature**: **40°C.**
- **Dry motor** cooled by the pumped liquid.
- **Power cord**:
  - single-phase: with plug.
  - three-phase: without plug.
- **Insulation class 130°C (B)**.
- **IPX8 protection**.
- **Maximum immersion depth**: **5 m**.
- The **GDOC3** pump features a flow rate up to **135 l/min**, head up to **7 m**, and passes **suspended solids up to 10 mm** in diameter.
  Only available in single-phase version.
- The **GDOC7** pump features a flow rate up to **225 l/min**, head up to **11 m**, and passes **suspended solids up to 10 mm** in diameter.
- The **GDOC7VX** pump features a flow rate up to **175 l/min**, head up to **7 m**, and can hanGDLe liquids with **suspended solids up to 20 mm** in diameter.
- **Versions**:
  - Single-phase: 220-240V, 50Hz 2 poles.
  - Three-phase: 220-240V, 50Hz 2 poles.
    380-415V, 50Hz 2 poles.
- **The single-phase versions** feature:
  - **pre-assembled float switch** for automatic pump operation.
  - **built-in capacitor**.
  - **thermal overload protection** to stop pump supply in case of overheating.
- SG versions (single-phase without float switch), GW versions (single-phase with bell float switch), 60 Hz single-phase and three-phase versions, versions with various power cord lengths and various plugs are available on request.
- A "**shallow-suction device**", that can be mounted on both the GDOC3 and GDOC7 models, is available on request. It ensures the complete drainage of flooded floors (down to 3 mm from floor).

SOS KIT

The **SOS Kit** is available, for quick emergency dewatering of flooded basements, garages and residential buildings.
The kit is composed of:
- a single-phase **GDOC3** electric pump, equipped with float switch, 10 meters power cord with plug and a quick coupling already mounted for rapid hose connection.
- 6 meters long **flexible hose**,complete with quick coupling already mounted for rapid pump connection.
- **plastic box** that can be used to store the kit on a shelf when not in use, or as a strainer during operation.

GDOC SERIES
IDENTIFICATION CODE

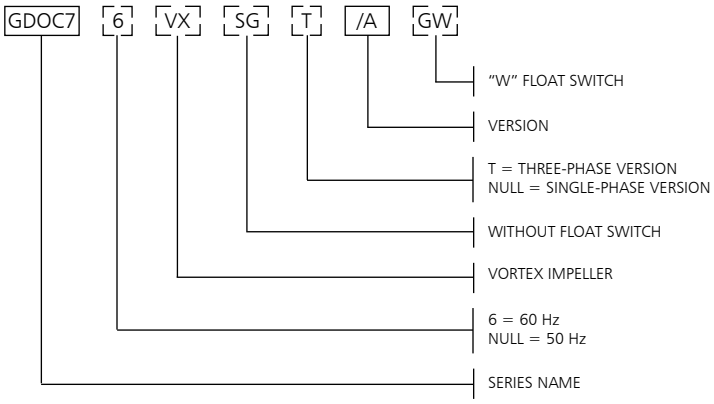

EXAMPLE : GDOC 7VX/A
GDOC 7 Series Electric pump, 50 Hz version,
Vortex impeller, single-phase, /A version.

SINGLE-PHASE RATING PLATE

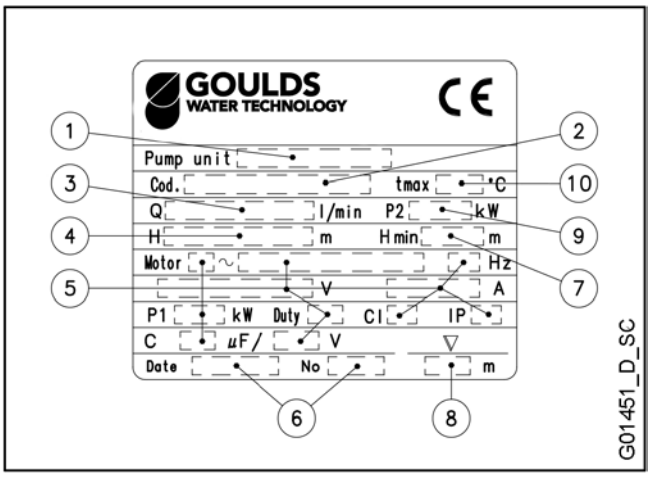

THREE-PHASE RATING PLATE

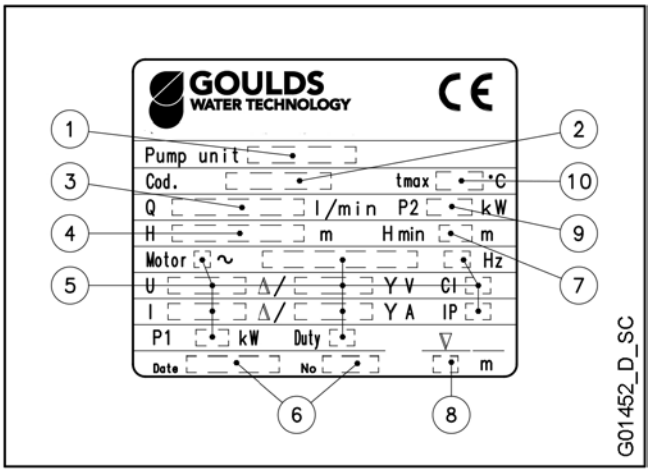

LEGEND

1 - Electric pump type

2 - Code

3 - Delivery range

4 - Head range

5 - Motor type

6 - Date of manufacture and serial number

7 - Minimum head

8 - Maximum immersion depth

9 - Rated output

10 - Maximum liquid temperature

GDOC SERIES
LIST OF MODELS AND TABLE OF MATERIALS

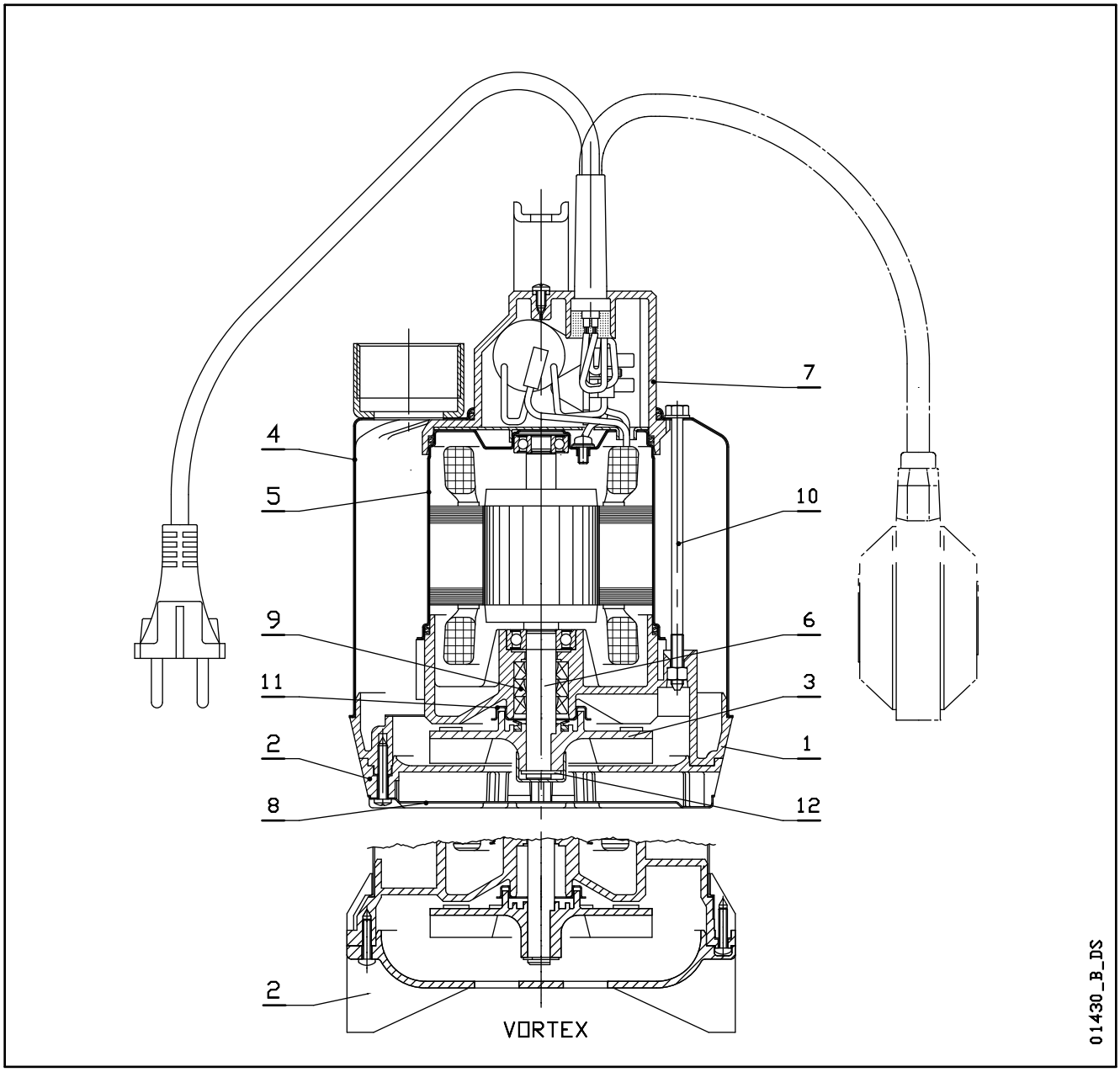

REF. N.	NAME	MATERIAL	REFERENCE STANDARDS	
			EUROPE	USA
1	Pump body	PPE + PS resin + 20 % GF		
2	Suction strainer	PPE + PS resin + 20 % GF		
	Lower support	PPE + PS resin + 20 % GF		
3	Impeller GDOC3	PPE + PS resin + 20 % GF		
	Impeller GDOC7 - GDOC7VX	PA 66 + 30 % GF		
4	External case	Stainless steel	EN 10088-1-X5CrNi18-10 (1.4301)	AISI 304
5	Internal motor casing	Stainless steel	EN 10088-1-X5CrNi18-10 (1.4301)	AISI 304
6	Shaft	Stainless steel	EN 10088-1-X12CrS13 (1.4005)	AISI 416
7	Head	PPE + PS resin + 20 % GF		
8	Lower cover	Stainless steel	EN 10088-1-X5CrNi18-10 (1.4301)	AISI 304
9	Elastomers	NBR		
10	Tie-rod and screws	Stainless steel	EN 10088-1-X5CrNi18-10 (1.4301)	AISI 304
11	Double wear ring	Stainless steel	EN 10088-1-X5CrNi18-10 (1.4301)	AISI 304
12	Impeller fixing ring	Stainless steel	EN 10088-1-X5CrNi18-10 (1.4301)	AISI 304

gdoc-en_c_tm

GOULDS WATER TECHNOLOGY
a xylem brand

GDOC SERIES
OPERATING CHARACTERISTICS AT 50 Hz

GDOC	~ 2850 [rpm]	ISO 9906:2012 - Grade 3B

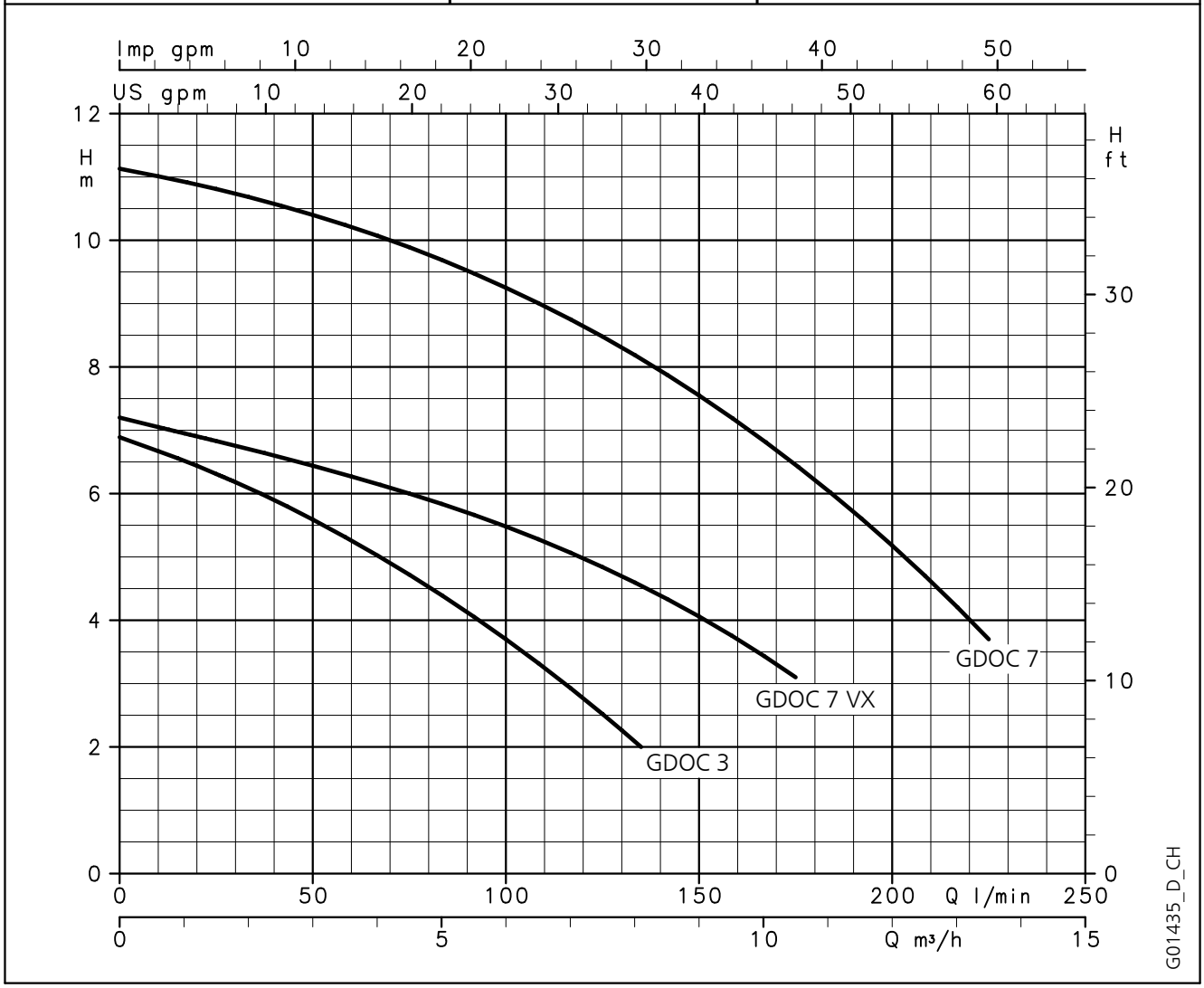

HYDRAULIC PERFORMANCE TABLE

PUMP TYPE	RATED POWER		Q = DELIVERY									
			l/min	0	25	50	75	100	125	135	175	225
			m³/h	0	1,5	3	4,5	6	7,5	8,1	10,5	13,5
	kW	HP	H = TOTAL HEAD METRES COLUMN OF WATER									
GDOC3	0,25	0,33		6,9	6,3	5,6	4,7	3,7	2,5	2,0		
GDOC7(T)	0,55	0,75		11,1	10,8	10,4	9,9	9,3	8,5	8,1	6,5	3,7
GDOC7VX(T)	0,55	0,75		7,2	6,8	6,4	6,0	5,5	4,8	4,5	3,1	

These performances are valid for liquids with density ρ = 1,0 kg/dm³ and kinematic viscosity ν = 1 mm²/s.

gdoc-2p50-en_b_th

ELECTRICAL DATA TABLE

PUMP TYPE SINGLE-PHASE	ABSORBED POWER* kW	ABSORBED CURRENT* 220-240 V A	CAPACITOR µF / 450 V
GDOC 3	0,31	1,43	6,3
GDOC 7	0,78	3,47	16
GDOC 7VX	0,66	2,96	16

PUMP TYPE THREE-PHASE	ABSORBED POWER* kW	ABSORBED CURRENT* 220-240 V A	ABSORBED CURRENT* 380-415 V A
-	-	-	-
GDOC 7T	0,79	2,82	1,63
GDOC 7VXT	0,66	2,68	1,55

*Maximum values within operating range

gdoc-2p50-en_a_te

GDOC SERIES
DIMENSIONS AND WEIGHTS

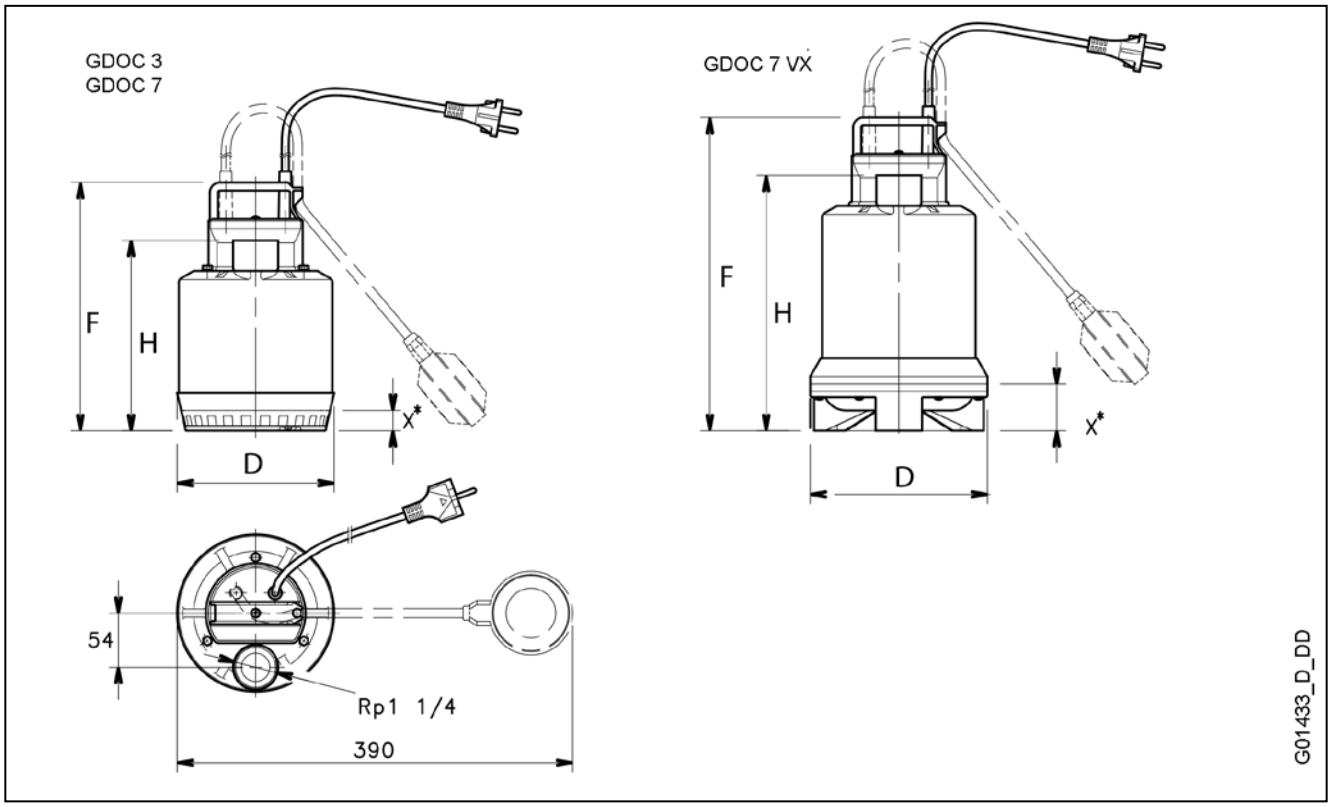

PUMP TYPE		DIMENSIONS (mm)				WEIGHT
		F	H	D	X*	kg
GDOC3	GDOC3 GW	245	188	155	20	4
GDOC7	GDOC7 GW	285	228	155	20	6
GDOC7VX	-	310	252	175	45	6

* Minimum liquid level.

gdoc_gdoc gw-2p50-en_a_td

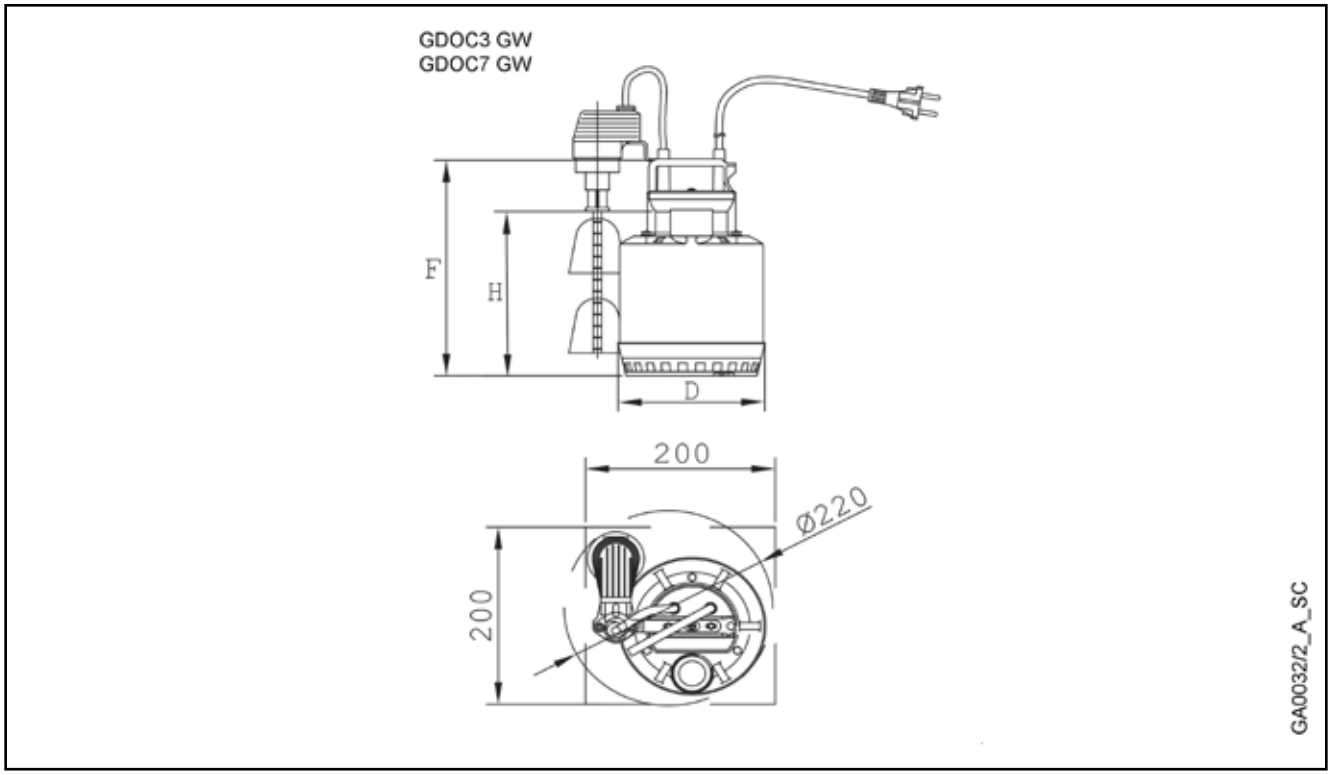

GDOC SERIES
INSTALLATION EXAMPLES

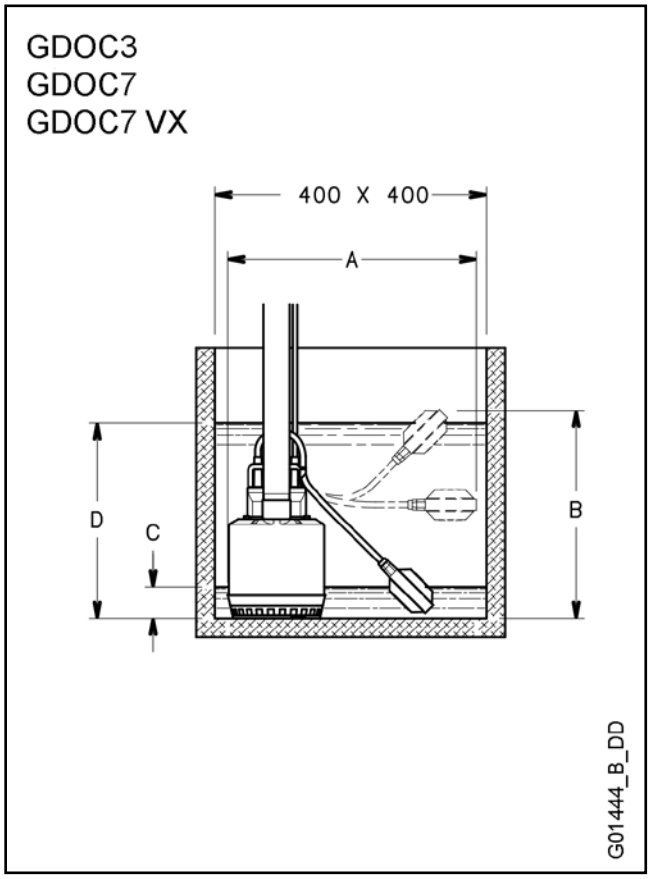

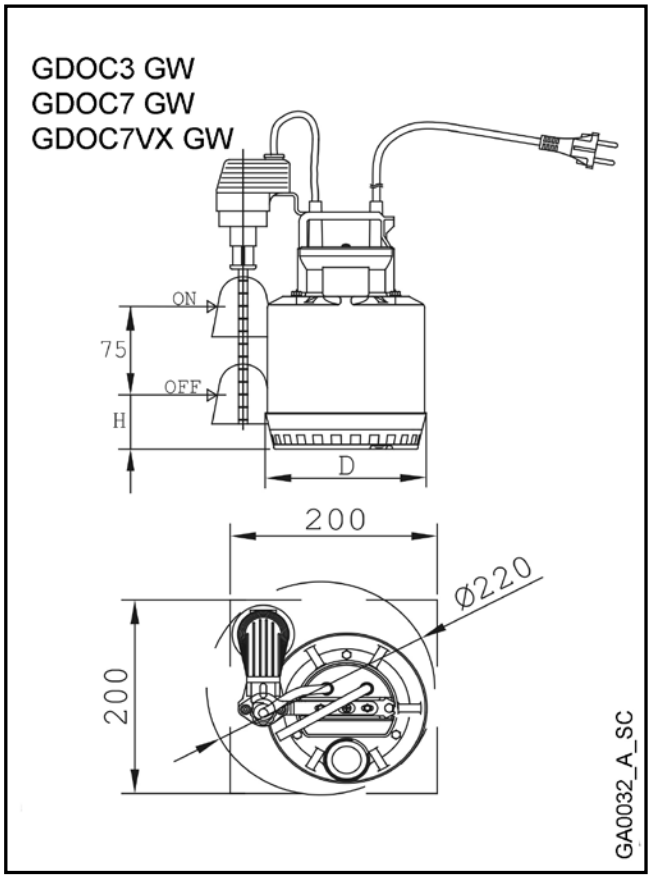

PUMP TYPE		DIMENSIONS (mm)		MINIMUM WATER LEVEL	MAXIMUM WATER LEVEL	MINIMUM WATER LEVEL
		A	B	C*	D*	H
GDOC3	GDOC3 GW	390	330	50	310	75
GDOC7	GDOC7 GW	390	370	90	350	75
GDOC7VX	-	390	395	115	375	125
-	GDOC7VX GW	390	370	90	350	100

* Indicative values depending on the float switch adjustment.

gdoc_gdocliv gw-2p50-en_a_td

ACCESSORIES

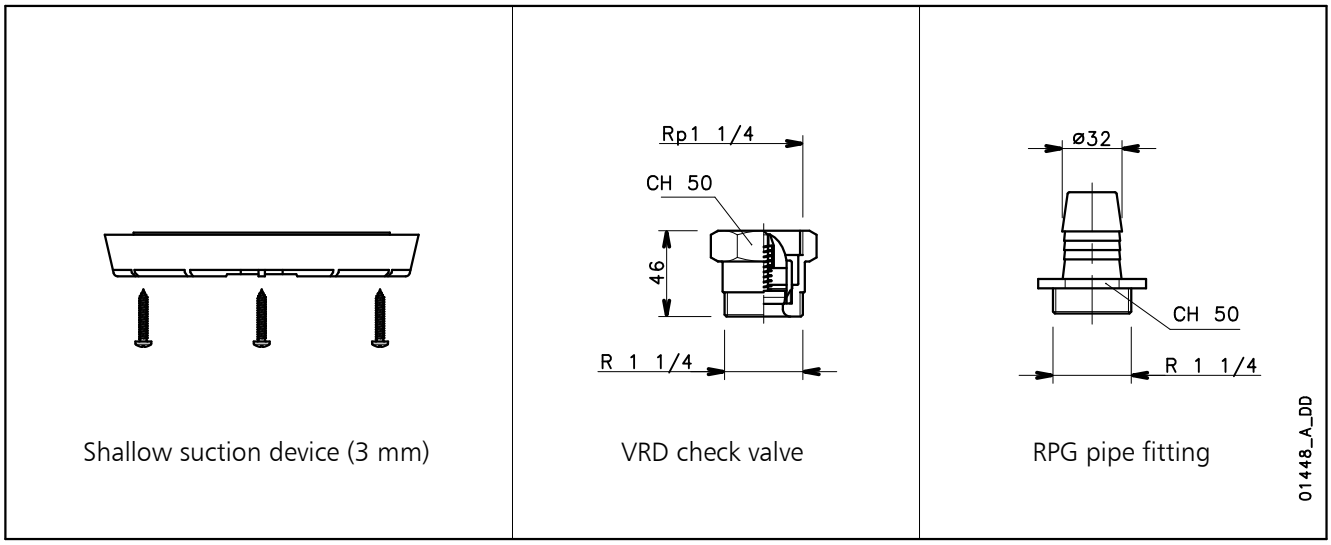

Shallow suction device (3 mm) | VRD check valve | RPG pipe fitting

GOULDS WATER TECHNOLOGY
a xylem brand

Submersible Electric Pumps for drainage of clean and slightly dirty water

GDIWA Series

Submersible pumps for clean and slightly dirty water manufactured in AISI 304 stainless steel. Head up to 20 metres, delivery up to 420 l/min (25,2 m^3/h). Four basic models with 0,55 to 1,5 kW.
DRIVELUB SEAL SYSTEM.
Diffuser plate coated with polyurethane for the maximum resistance to abrasion.

APPLICATIONS

- Draining of cellars, garages, basements.
- Draining of construction sites.
- Emptying of tanks and reservoirs.
- Lawn and garden irrigation.
- Pumping of domestic wastewater washing machines, showers, sinks.
- Emptying of tanks in industrial and ecological applications.

SPECIFICATIONS

- **Maximum liquid temperature**: **50°C**.
- **Open impeller**.
- Minimum level of pumped liquid: **25 mm**.
- **Maximum dimensions of suspended solids**: **8 mm**.
- **Dry motor** cooled by the pumped liquid.
- **Power cord**: **H07RN-F**, **10 m**.
  - single-phase: with plug.
  - three-phase: without plug.
- **Insulation class 155°C (F)**.
- **IPX8 protection**.
- **Maximum immersion depth**: **7 m**.
- **Versions**:
  - Single-phase: 220-240V, 50Hz 2 poles.
  - Three-phase: 220-240V, 50Hz 2 poles.
    380-415V, 50Hz 2 poles.
- **Motor power**:
  - Single-phase: **0,55 to 1,1 kW**.
  - Three-phase: **0,55 to 1,5 kW**.
- **The single-phase versions** feature:
  - **pre-assembled float switch** for automatic pump operation.
  - **built-in capacitor**.
  - **thermal overload protection** to stop pump supply in case of overheating.
- SG versions (single-phase without float switch), GT versions (single-phase with pre-assembled tube float switch), 60 Hz single-phase and three-phase versions, versions with various power cord lengths and various plugs are available on request.

DRIVELUB SEAL SYSTEM

- Watertight electric motor protected by multiple seal system with **oil chamber**. A **V-ring** and **silicon carbide mechanical seal** (extremely resistant to wear and abrasion), as well as a **lip seal** which is continuosly lubricated by the **DRIVELUB system**, provide an extreme barrier against infiltration.

GDIWA SERIES
IDENTIFICATION CODE

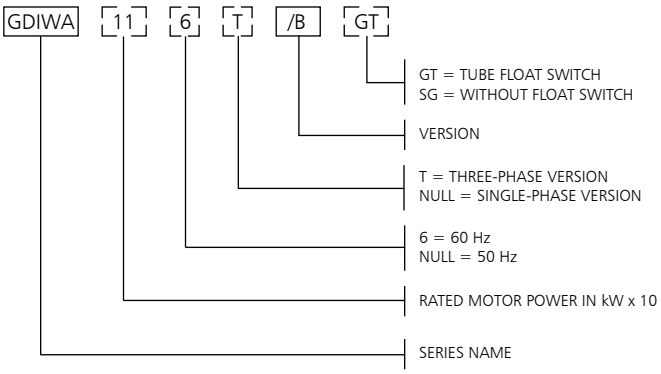

EXAMPLE : GDIWA 11/B
GDIWA Series Electric pump, rated motor power 1,1 kW,
50 Hz version, single-phase, /B version.

SINGLE-PHASE RATING PLATE

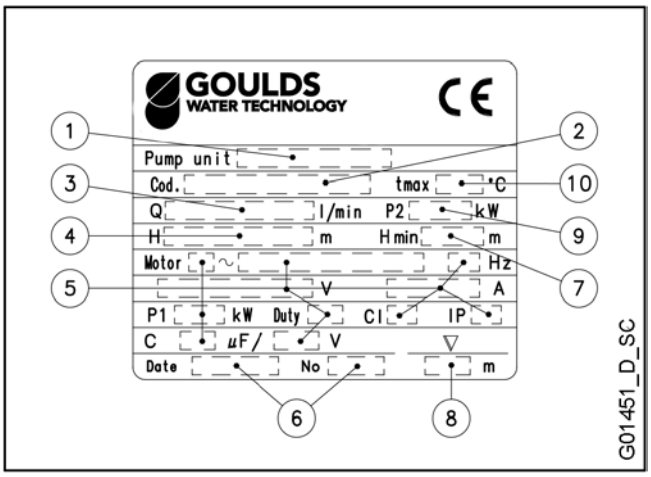

THREE-PHASE RATING PLATE

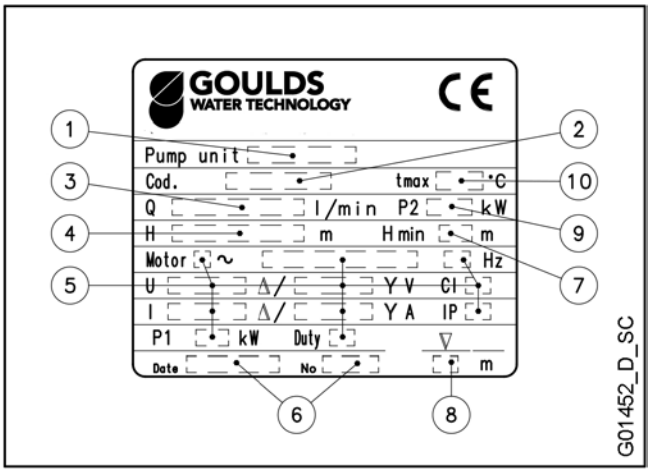

LEGEND

1 - Electric pump type

2 - Code

3 - Delivery range

4 - Head range

5 - Motor type

6 - Date of manufacture and serial number

7 - Minimum head

8 - Maximum immersion depth

9 - Rated output

10 - Maximum liquid temperature

GDIWA SERIES
LIST OF MODELS AND TABLE OF MATERIALS

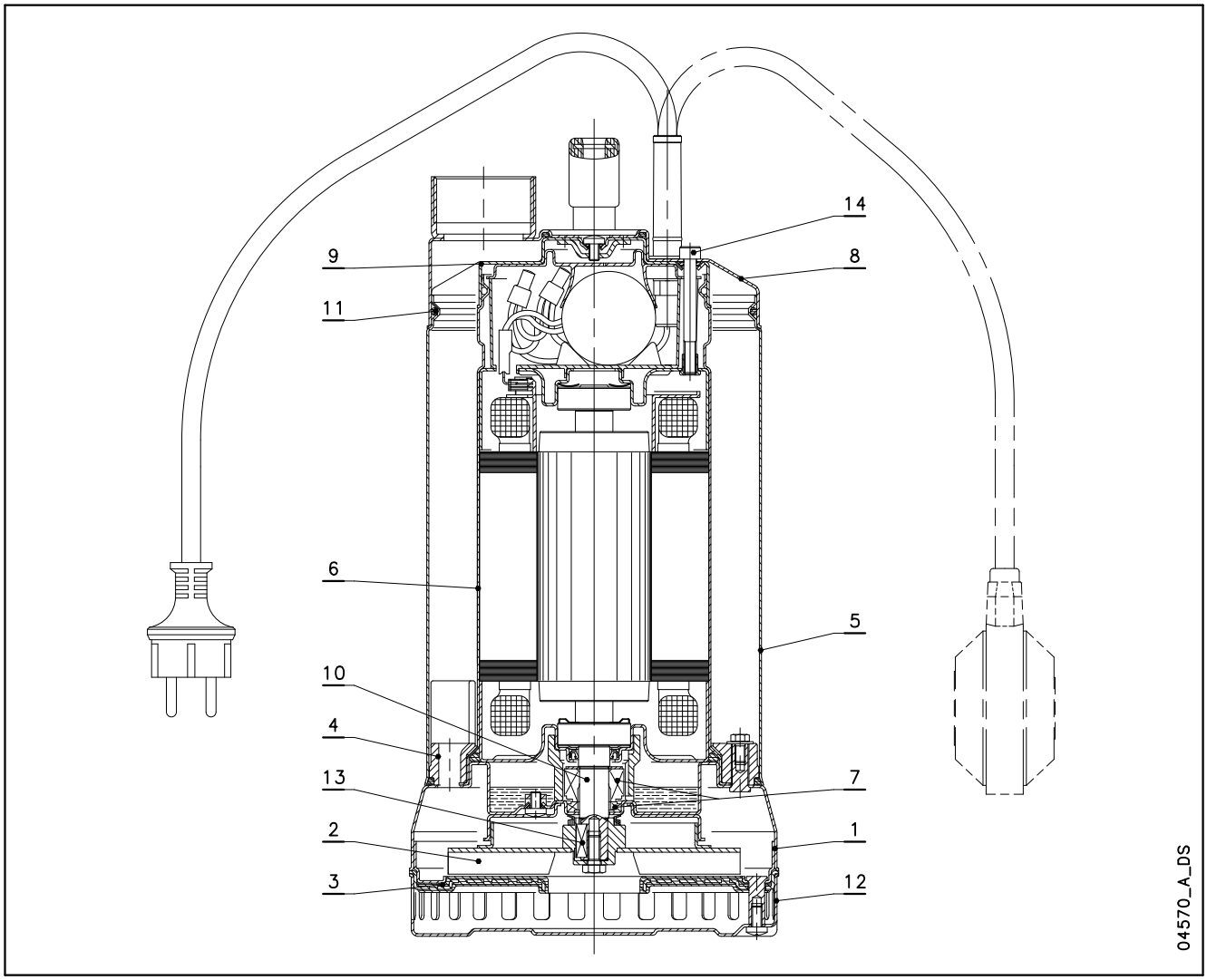

REF. N.	NAME	MATERIAL	REFERENCE STANDARDS	
			EUROPE	USA
1	Pump body	Stainless steel	EN 10088-1-X5CrNi18-10 (1.4301)	AISI 304
2	Impeller	Stainless steel	EN 10088-1-X5CrNi18-10 (1.4301)	AISI 304
3	Suction flange	Stainless steel	EN 10088-1-X5CrNi18-10 (1.4301)	AISI 304
		Thermoplastic polyurethane TPU		
4	Diffuser	PA 66 + 30 % GF		
5	Sleeve	Stainless steel	EN 10088-1-X5CrNi18-10 (1.4301)	AISI 304
6	Motor casing	Stainless steel	EN 10088-1-X5CrNi18-10 (1.4301)	AISI 304
7	Mechanical seal	Silicon carbide / Silicon carbide / NBR (standard version)		
8	Cover	Stainless steel	EN 10088-1-X5CrNi18-10 (1.4301)	AISI 304
9	Upper cover	Stainless steel	EN 10088-1-X5CrNi18-10 (1.4301)	AISI 304
10	Shaft end	Stainless steel	EN 10088-1-X5CrNi18-10 (1.4301)	AISI 304
11	Elastomers	NBR (standard version)		
12	Strainer	Stainless steel	EN 10088-1-X5CrNi18-10 (1.4301)	AISI 304
13	Key	Stainless steel	EN 10088-1-X5CrNiMo17-12-2 (1.4401)	AISI 316
14	Screws	Stainless steel	EN 10088-1-X5CrNi18-10 (1.4301)	AISI 304

diwa-en_b_tm

GDIWA SERIES
MECHANICAL SEAL

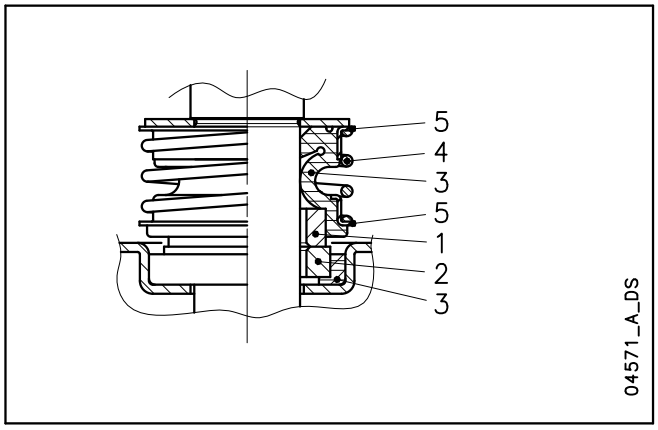

LIST OF MATERIALS

POSITION 1 - 2	POSITION 3	POSITION 4 - 5
Q1 : Silicon carbide	P : NBR	G : AISI 316
	V : FPM	

diwa_ten-mec-en_a_tm

SEAL TYPES

TYPE	POSITION					TEMPERATURE (°C)
	1	2	3	4	5	
	ROTATING ASSEMBLY	FIXED ASSEMBLY	ELASTOMERS	SPRINGS	OTHER COMPONENTS	
STANDARD MECHANICAL SEAL						
Q_1Q_1PGG	Q_1	Q_1	P	G	G	0 +50
OTHER MECHANICAL SEAL TYPES						
Q_1Q_1VGG	Q_1	Q_1	V	G	G	0 +50

diwa_tipi-ten-mec-en_b_tc

GOULDS WATER TECHNOLOGY
a xylem brand

GDIWA SERIES
OPERATING CHARACTERISTICS AT 50 Hz

GDIWA	~ 2850 [rpm]	ISO 9906:2012 - Grade 3B

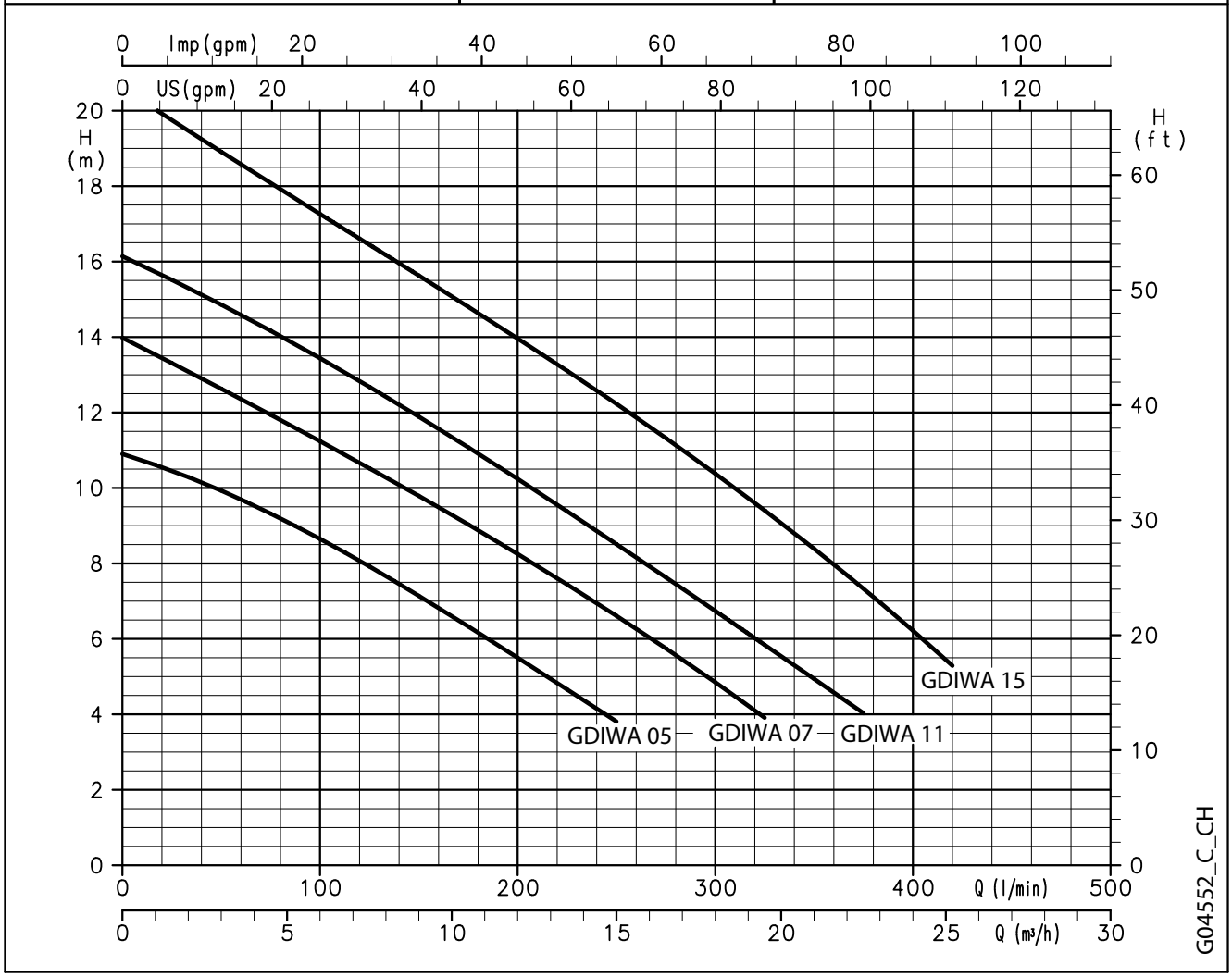

HYDRAULIC PERFORMANCE TABLE

PUMP TYPE	RATED POWER		Q = DELIVERY											
			l/min	0	100	125	150	175	200	225	250	300	325	375	420
			m³/h	0	6	7,5	9	10,5	12	13,5	15	18	19,5	22,5	25,2
	kW	HP	H = TOTAL HEAD METRES COLUMN OF WATER												
GDIWA 05(T)	0,55	0,75	10,9	8,6	7,9	7,1	6,3	5,5	4,7	3,8				
GDIWA 07(T)	0,75	1	14,0	11,2	10,5	9,8	9,0	8,3	7,4	6,6	4,8	3,9		
GDIWA 11(T)	1,1	1,5	16,1	13,4	12,7	11,9	11,1	10,2	9,4	8,5	6,7	5,8	4,0	
GDIWA 15T	1,5	2	20,6	17,3	16,4	15,6	14,8	14,0	13,1	12,2	10,4	9,4	7,3	5,3

These performances are valid for liquids with density r = 1,0 kg/dm³ and kinematic viscosity n = 1 mm²/s.

gdiwa-2p50-en_a_th

ELECTRICAL DATA TABLE

PUMP TYPE SINGLE-PHASE	ABSORBED POWER* kW	ABSORBED CURRENT* 220-240 V A	CAPACITOR µF / 450 V
GDIWA 05	0,79	3,92	16
GDIWA 07	1,25	6,20	22
GDIWA 11	1,53	6,83	30
-	-	-	-

PUMP TYPE THREE-PHASE	ABSORBED POWER* kW	ABSORBED CURRENT* 220-240 V A	ABSORBED CURRENT* 380-415 V A
GDIWA 05T	0,72	2,56	1,48
GDIWA 07T	1,2	4,26	2,46
GDIWA 11T	1,44	4,64	2,68
GDIWA 15T	2,05	6,74	3,89

*Maximum values within operating range

gdiwa-2p50-en_a_te

GDIWA SERIES
DIMENSIONS AND WEIGHTS

GDIWA

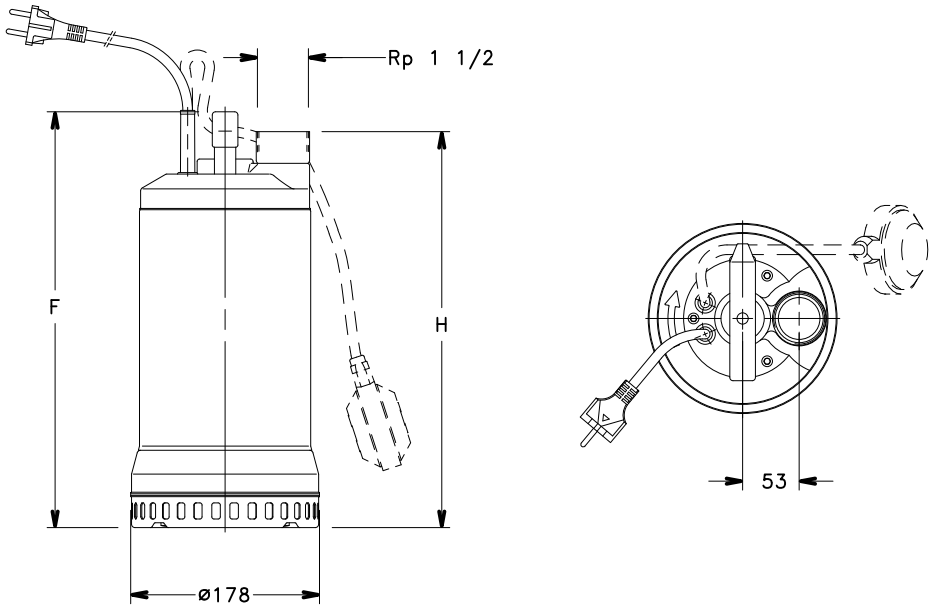

G04551_D_DD

PUMP TYPE SINGLE-PHASE		DIMENSIONS (mm)		WEIGHT
		F	H	kg
GDIWA05	GDIWA05 GT	348	330	12
GDIWA07	GDIWA07 GT	393	375	14,3
GDIWA11	GDIWA11 GT	393	375	17
-	-	-	-	-

PUMP TYPE THREE-PHASE	DIMENSIONS (mm)		WEIGHT
	F	H	kg
GDIWA05T	348	330	11
GDIWA07T	363	345	13
GDIWA11T	393	375	15
GDIWA15T	393	375	16,5

gdiwa-2p50-en_b_td

GDIWA GT

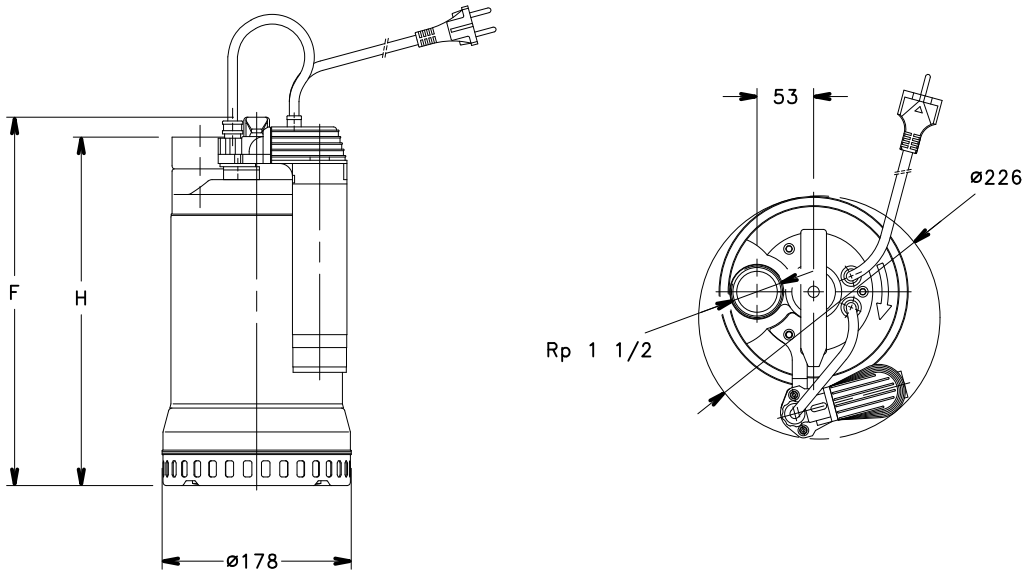

G04559_A_DD

GDIWA SERIES
INSTALLATION EXAMPLES

GDIWA

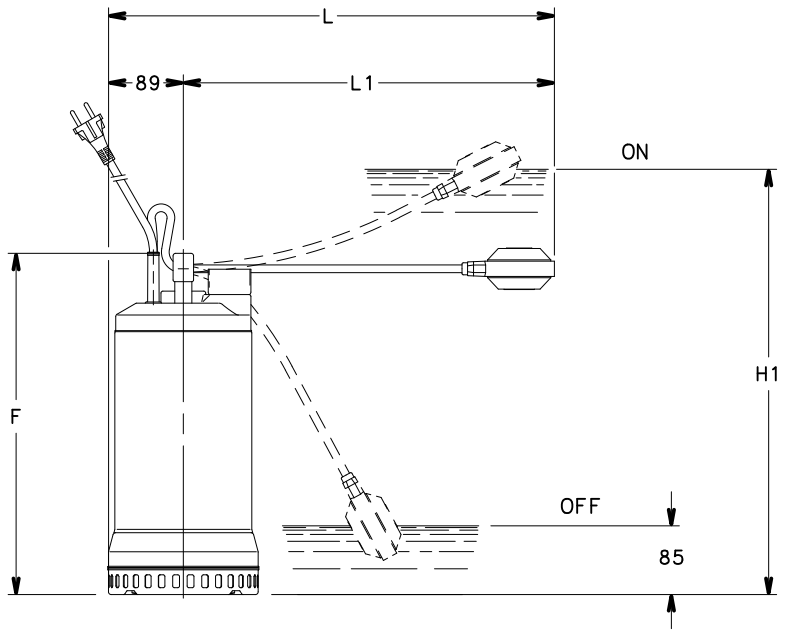

PUMP TYPE		DIMENSIONS (mm)				
		F	L	L1	H1	H2
GDIWA05	GDIWA05 GT	348	459	370	430	180
GDIWA07	GDIWA07 GT	393	504	415	490	180
GDIWA11	GDIWA11 GT	393	524	435	490	180

gdiwaliv-2p50-en_d_td

GDIWA GT

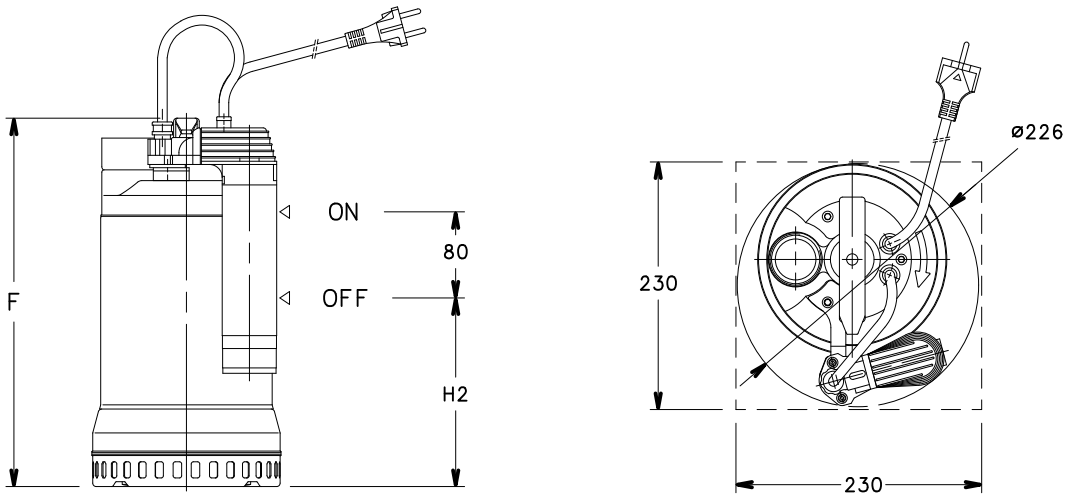

Submersible Electric Pumps for drainage of dirty water

The GDOMO series electric pumps are available with **twin-channel** or **vortex** impeller (GDOMO VX). Designed to hanGDLe liquids with suspended solids up to 50 mm in diameter (35 mm for GDOMO 7 and GDOMO 7VX).
Four basic models with 0,55 to 1,5 kW.
DRIVELUB SEAL SYSTEM.

GDOMO Series

APPLICATIONS

- Pumping of effluent (VX model hanGDLes also suspended filaments).
- Emptying of septic tanks and residential sumps.
- Draining of flooded basements and garages.

SPECIFICATIONS

- **Maximum liquid temperature**: **35°C** with fully submerged pump.
- **Dry motor**.
- **Power cord**: **H07RN-F**
  - single-phase: with plug.
  - three-phase: without plug.
- **Insulation class 155°C (F)**.
- **IPX8 protection**.
- **Maximum immersion depth**: **5 m**.
- **Versions**:
  - Single-phase: 220-240V, 50Hz 2 poles.
  - Three-phase: 220-240V, 50Hz 2 poles.
    380-415V, 50Hz 2 poles.
- **Motor power**:
  - single-phase: **0,55 to 1,1 kW**.
  - three-phase: **0,55 to 1,5 kW**.
- **The single-phase versions** feature:
  - **pre-assembled float switch** for automatic pump operation.
  - **built-in capacitor**.
  - **thermal overload protection** to stop pump supply in case of overheating.
- The **GDOMO 7** and **GDOMO 7VX** models feature:
  - **Rp 1"1/2 threaded delivery port** (female gas).
  - hanGDLing of liquids with suspended **solids up to 35 mm** in diameter.
  - **fiberglass-reinforced technopolymer impeller** (GDOMO S7 and GDOMO S7VX models with stainless steel impeller are also available).
- The **GDOMO 10-15-20** and **GDOMO 10-15-20 VX** models feature:
  - **Rp 2" threaded delivery port** female gas (can be turned into a flanged version if an optional accessory is installed).
  - hanGDLing of liquids with suspended **solids up to 50 mm** in diameter.
  - **stainless steel twin-channel or vortex impeller**.

DRIVELUB SEAL SYSTEM

- Watertight electric motor protected by multiple seal system with **oil chamber**. A **V-ring** and **silicon carbide mechanical seal** (extremely resistant to wear and abrasion), as well as a **lip seal** which is continuosly lubricated by the **DRIVELUB system**, provide an extreme barrier against infiltration.

Submersible Electric Pumps for drainage of dirty water equipped with grinder system

The GDOMO GRI series electric pumps are equipped with an extremely efficient and highly reliable grinder system.
The grinder is able to macerate all the solids present in the sewage and to pass it through small discharge pipes (25 mm diameter).
GDOMO GRI is available in the 1,1 kW and 1,5 kW power.
DRIVELUB SEAL SYSTEM.

GDOMO GRI Series

APPLICATIONS

- Pumping of sewage with suspended solids.
- Emptying of septic tanks and residential sumps.
- Draining of flooded areas.
- Pumping water from a pressurized sewer network.

SPECIFICATIONS

- **Maximum liquid temperature**: **35°C** with fully submerged pump.
- **Dry motor**.
- **Power cord**: **H07RN-F**
  - single-phase: with plug.
  - three-phase: without plug.
- **Insulation class 155°C (F)**.
- **IPX8 protection**.
- **Maximum immersion depth**: **5 m**.
- **Versions**:
  - Single-phase: 220-240V, 50Hz 2 poles.
  - Three-phase: 220-240V, 50Hz 2 poles.
    380-415V, 50Hz 2 poles.
- **Motor power**:
  - **1,1 kW** single-phase and three-phase.
  - **1,5 kW** single-phase and three-phase.
- **The single-phase versions** feature:
  - **pre-assembled float switch** for automatic pump operation.
  - **built-in capacitor (only for 1,1 kW).**
  - **thermo-amperometric overload protection** to stop pump supply in case of overheating.
- **GDOMO GRI** pumps feature:
  - **Rp 1" threaded delivery port (female gas)** for 1,1kW (11/A).
  - **Rp 1"1/4 threaded delivery port (female gas)** for 1,1kW (11/HF) and 1,5kW (15).
  - technopolymer PBT **Impeller**.
  - high resistance stainless steel **grinder**.

- **DRIVELUB SEAL SYSTEM**
  Watertight electric motor protected by multiple seal system with **oil chamber**. A **V-ring** and **silicon carbide mechanical seal** (extremely resistant to wear and abrasion), as well as a **lip seal** which is continuosly lubricated by the **DRIVELUB system**, provide an extreme barrier against infiltration.

GDOMO SERIES IDENTIFICATION CODE

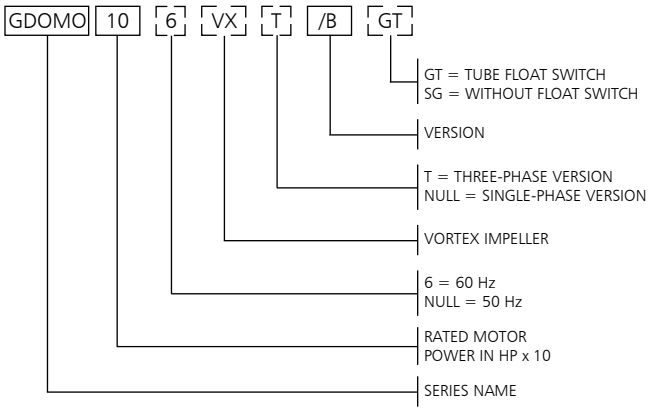

EXAMPLE : GDOMO 10/B
GDOMO Series Electric pump, rated motor power 1 HP,
50 Hz version, single-phase, /B version.

GDOMO GRI SERIES IDENTIFICATION CODE

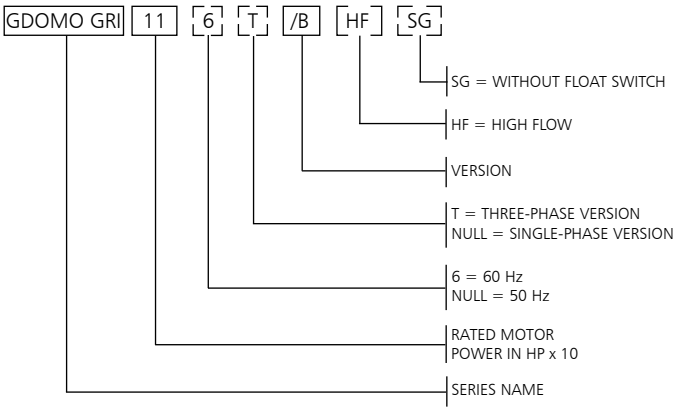

EXAMPLE : GDOMO GRI 11
GDOMO GRI (grinder) Series Electric pump,
rated motor power 1,1 kW, 50 Hz version, single-phase.

SINGLE-PHASE RATING PLATE

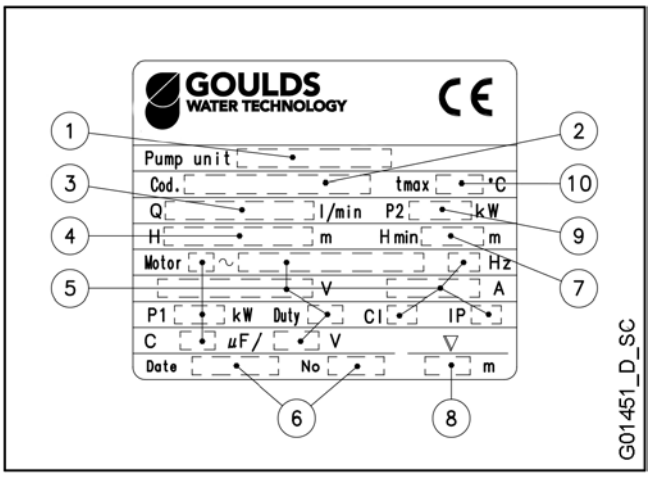

THREE-PHASE RATING PLATE

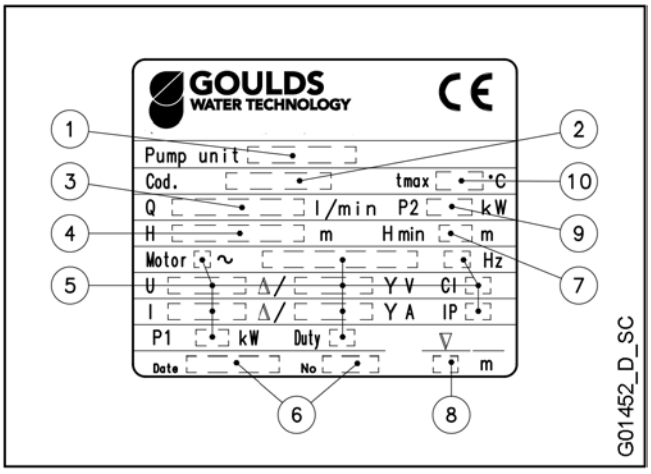

LEGEND

1 - Electric pump type

2 - Code

3 - Delivery range

4 - Head range

5 - Motor type

6 - Date of manufacture and serial number

7 - Minimum head

8 - Maximum immersion depth

9 - Rated output

10 - Maximum liquid temperature

GDOMO SERIES
LIST OF MODELS AND TABLE OF MATERIALS

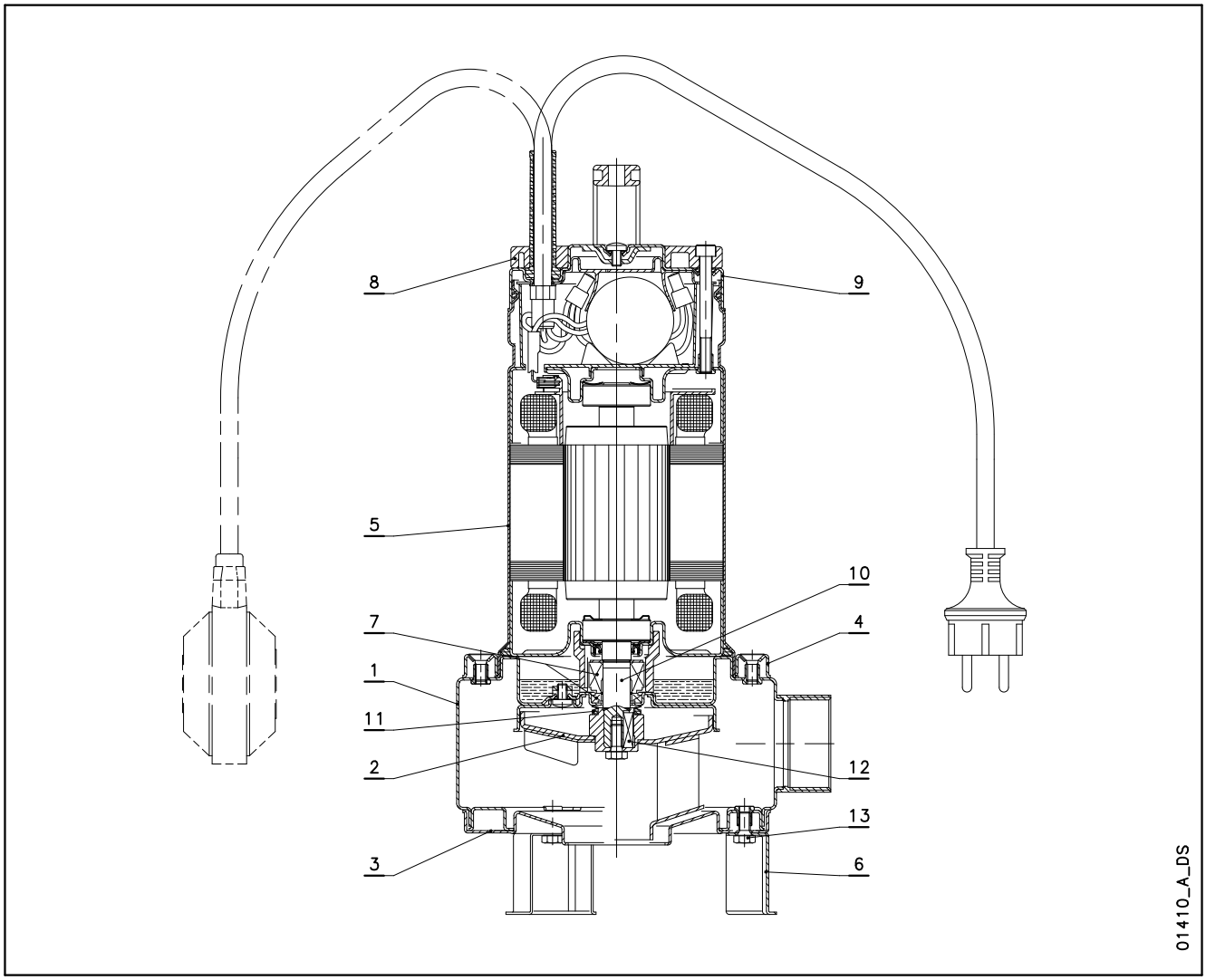

REF. N.	NAME	MATERIAL	REFERENCE STANDARDS	
			EUROPE	USA
1	Pump body	Stainless steel	EN 10088-1-X5CrNi18-10 (1.4301)	AISI 304
2	Impeller	PA 66 + 30 % GF		
		Stainless steel	EN 10088-1-X5CrNi18-10 (1.4301)	AISI 304
3	Suction flange	Stainless steel	EN 10088-1-X5CrNi18-10 (1.4301)	AISI 304
4	Fixing ring	Stainless steel	EN 10088-1-X5CrNi18-10 (1.4301)	AISI 304
5	Motor casing	Stainless steel	EN 10088-1-X5CrNi18-10 (1.4301)	AISI 304
6	Support foot	Stainless steel	EN 10088-1-X5CrNi18-10 (1.4301)	AISI 304
7	Mechanical seal	Silicon carbide / Silicon carbide / NBR (standard version)		
8	Handle	PA 66 + 30 % GF		
9	Upper cover	Stainless steel	EN 10088-1-X5CrNi18-10 (1.4301)	AISI 304
10	Shaft end	Stainless steel	EN 10088-1-X5CrNi18-10 (1.4301)	AISI 304
11	Elastomers	NBR (standard version)		
12	Key	Stainless steel	EN 10088-1-X5CrNiMo17-12-2 (1.4401)	AISI 316
13	Screws	Stainless steel	EN 10088-1-X5CrNi18-10 (1.4301)	AISI 304

domo-en_b_tm

GDOMO GRI SERIES
LIST OF MODELS AND TABLE OF MATERIALS

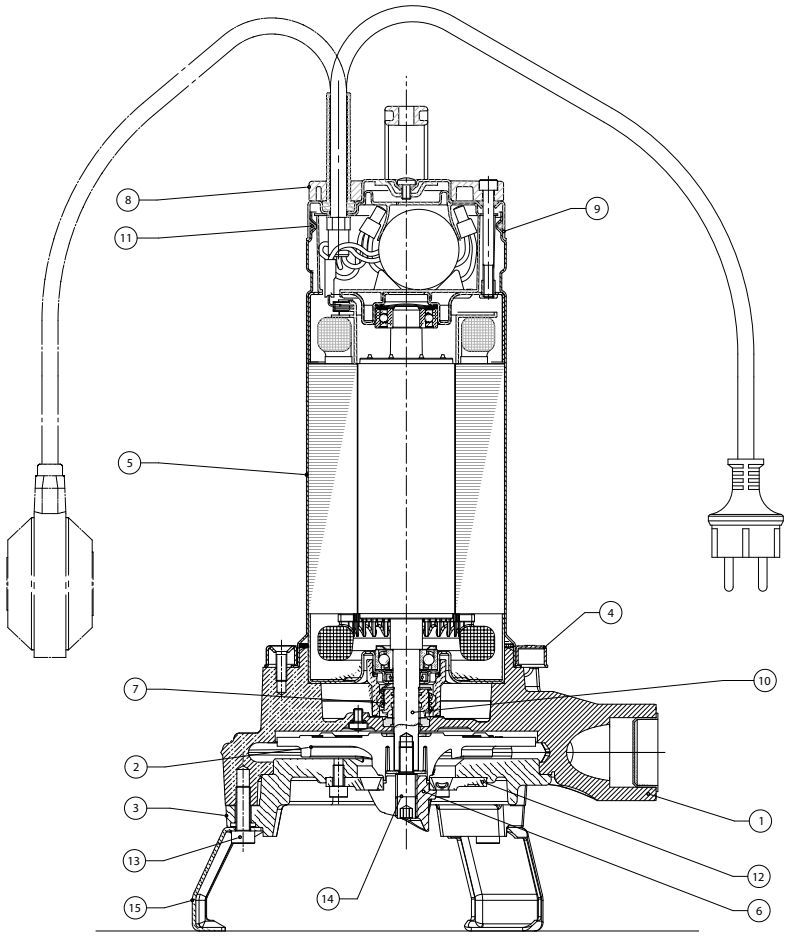

REF. N.	NAME	MATERIAL	REFERENCE STANDARDS	
			EUROPE	USA
1	Pump body	Cast iron	EN 1561-GJL-200 (JL1030)	ASTM Class 30
2	Impeller	PBT		
3	Suction cover	Cast iron	EN 1561-GJL-200 (JL103)	ASTM Class 30
4	Fixing ring	Stainless steel	EN 10088-1-X5CrNi18-10 (1.4301)	AISI 304
5	Motor casing	Stainless steel	EN 10088-1-X5CrNi18-10 (1.4301)	AISI 304
6	Cutter wheel	Stainless steel	X95CrMoV17 (DIN 1.4535)	-
7	Mechanical seal	Silicon carbide / Silicon carbide / NBR (standard version)		
8	Handle	PA 66 + 30 % GF		
9	Upper cover	Stainless steel	EN 10088-1-X5CrNi18-10 (1.4301)	AISI 304
10	Shaft end	Stainless steel	EN 10088-1-X5CrNi18-10 (1.4301)	AISI 304
11	Elastomers	NBR (standard version)		
12	Cutter ring	Stainless steel	X95CrMoV17 (DIN 1.4535)	-
13	Screws	Stainless steel	EN 10088-1-X5CrNi18-10 (1.4301)	AISI 304
14	Impeller fixing screw + wheel	Stainless steel	EN 10088-1-X17CrNi16-2 (1.4057)	AISI 431
15	Support foot	Stainless steel	EN 10088-1-X5CrNi18-10 (1.4301)	AISI 304

domo-gri-en_d_tm

GDOMO SERIES - GDOMO GRI MECHANICAL SEAL

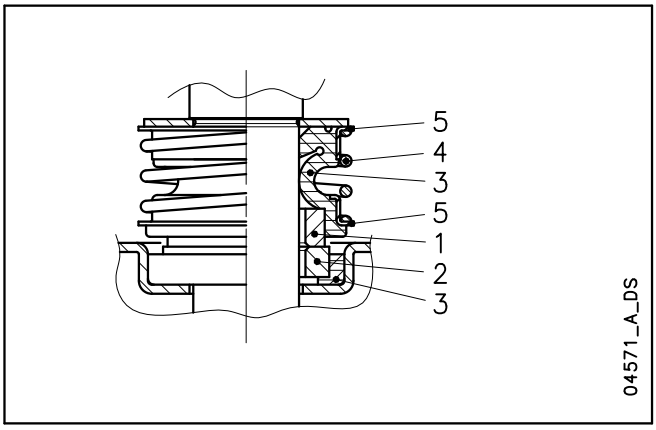

LIST OF MATERIALS

POSITION 1 - 2	POSITION 3	POSITION 4 - 5
Q1 : Silicon carbide	P : NBR	G : AISI 316
	V : FPM	

diwa_ten-mec-en_a_tm

SEAL TYPES

TYPE	POSITION					TEMPERATURE (°C)
	1	2	3	4	5	
	ROTATING ASSEMBLY	FIXED ASSEMBLY	ELASTOMERS	SPRINGS	OTHER COMPONENTS	
STANDARD MECHANICAL SEAL						
Q_1Q_1PGG	Q_1	Q_1	P	G	G	0 +35
OTHER MECHANICAL SEAL TYPES						
Q_1Q_1VGG	Q_1	Q_1	V	G	G	0 +35

domo_tipi-ten-mec-en_b_tc

GOULDS WATER TECHNOLOGY
a xylem brand

GDOMO SERIES
OPERATING CHARACTERISTICS AT 50 Hz

GDOMO	~ 2850 [rpm]	ISO 9906:2012 - Grade 3B

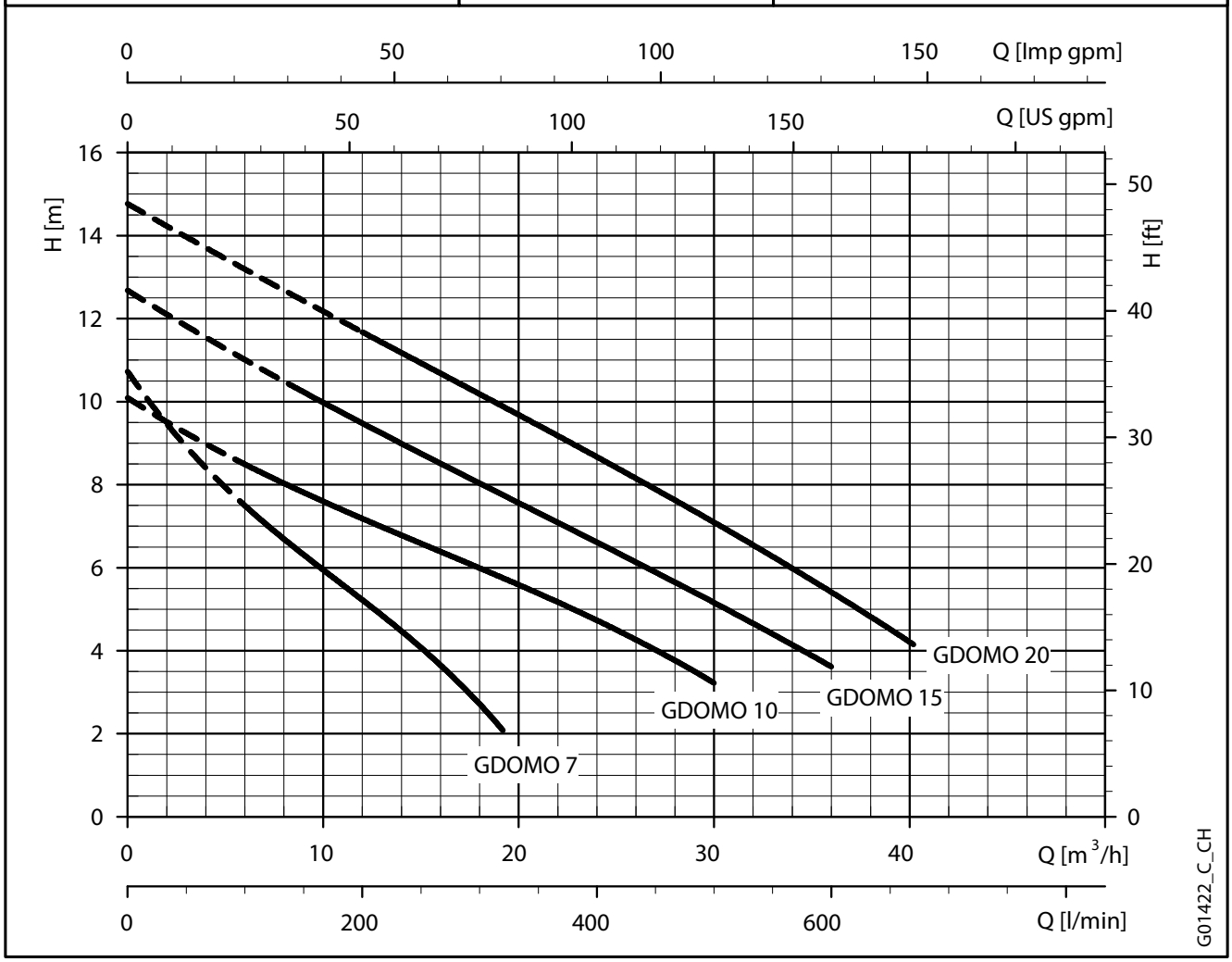

HYDRAULIC PERFORMANCE TABLE

PUMP TYPE	RATED POWER		Q = DELIVERY										
			l/min	0	100	150	200	250	300	320	400	500	600	670
			m³/h	0	6	9	12	15	18	19,2	24	30	36	40,2
	kW	HP	H = TOTAL HEAD METRES COLUMN OF WATER											
GDOMO 7(T) - S7(T)	0,55	0,75	10,7	7,5	6,3	5,2	4,1	2,7	2,1				
GDOMO 10(T)	0,75	1	10,1	8,5	7,8	7,2	6,6	6,0	5,8	4,7	3,2		
GDOMO 15(T)	1,1	1,5	12,7	11,0	10,2	9,5	8,8	8,0	7,8	6,6	5,2	3,6	
GDOMO 20T	1,5	2	14,8	13,2	12,4	11,7	10,9	10,2	9,9	8,7	7,1	5,4	4,2

These performances are valid for liquids with density ρ = 1,0 kg/dm³ and kinematic viscosity ν = 1 mm²/s.

gdomo-2p50-en_b_th

ELECTRICAL DATA TABLE

PUMP TYPE SINGLE-PHASE	ABSORBED POWER* kW	ABSORBED CURRENT* 220-240 V A	CAPACITOR µF / 450 V
GDOMO 7 - (S7)	0,8 (0,76)	3,94 (3,83)	16
GDOMO 10	1,14	5,84	22
GDOMO 15	1,58	7,02	30
-	-	-	-

PUMP TYPE THREE-PHASE	ABSORBED POWER* kW	ABSORBED CURRENT* 220-240 V A	ABSORBED CURRENT* 380-415 V A
GDOMO 7T - (S7T)	0,73 (0,68)	2,58	1,49
GDOMO 10T	1,09	4,09	2,36
GDOMO 15T	1,49	4,73	2,73
GDOMO 20T	1,96	6,6	3,81

*Maximum values within operating range

gdomo-2p50-en_b_te

GDOMO VX SERIES
OPERATING CHARACTERISTICS AT 50 Hz

GDOMO VX	~ 2850 [rpm]	ISO 9906:2012 - Grade 3B

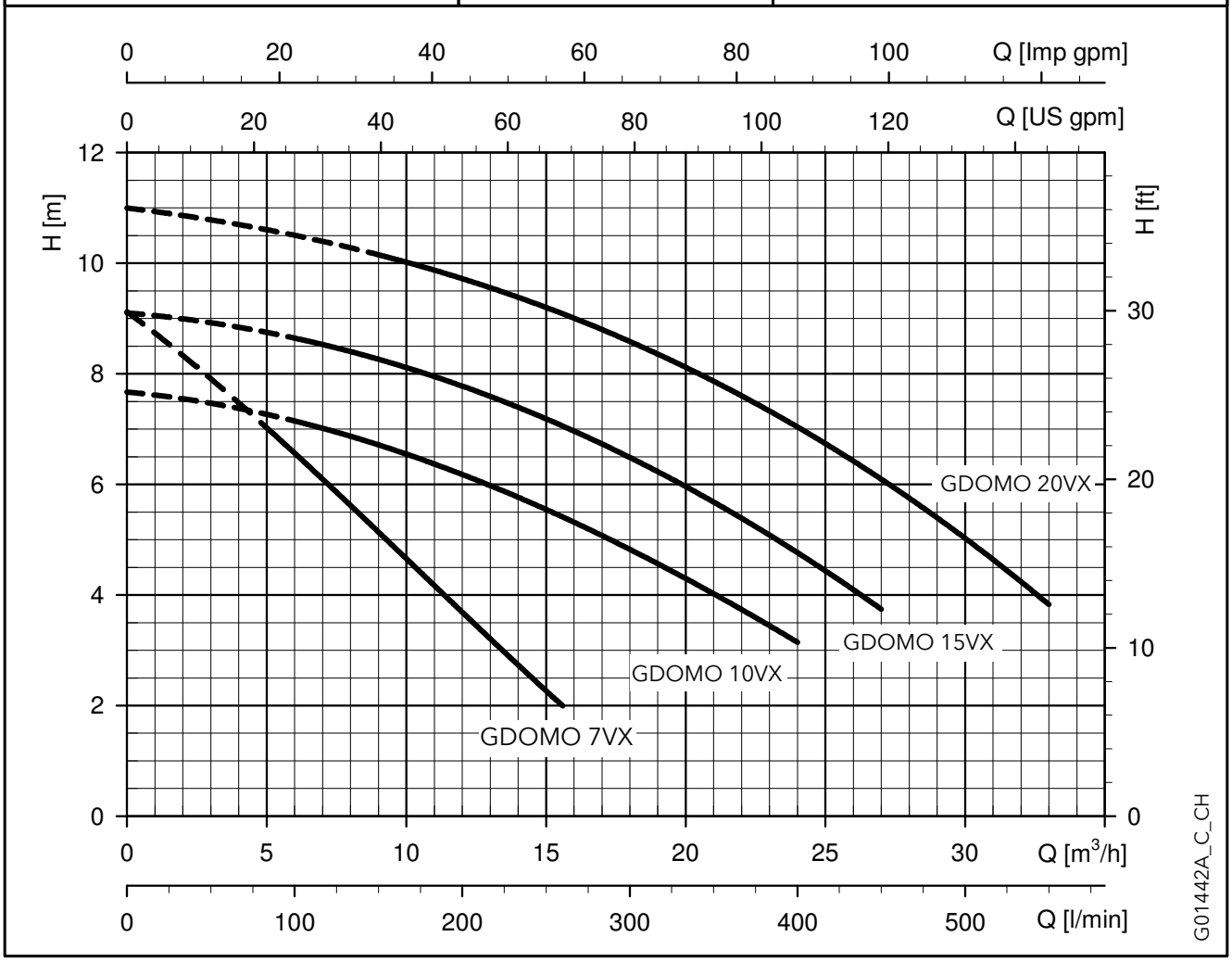

HYDRAULIC PERFORMANCE TABLE

PUMP TYPE	RATED POWER		Q = DELIVERY												
			l/min	0	80	100	150	175	200	225	260	300	400	450	550
			m³/h	0	4,8	6	9	10,5	12	13,5	15,6	18	24	27	33
	kW	HP	H = TOTAL HEAD METRES COLUMN OF WATER												
GDOMO 7VX(T) - S7VX(T)	0,55	0,75		9,1	7,1	6,6	5,1	4,4	3,7	3,0	2,0				
GDOMO 10VX(T)	0,75	1		7,7	7,3	7,1	6,7	6,5	6,2	5,9	5,4	4,8	3,1		
GDOMO 15VX(T)	1,1	1,5		9,1	8,8	8,6	8,3	8,0	7,8	7,5	7,1	6,5	4,8	3,7	
GDOMO 20VXT	1,5	2		11,0	10,6	10,5	10,2	9,9	9,7	9,5	9,1	8,6	7,0	6,1	3,8

These performances are valid for liquids with density ρ = 1,0 kg/dm³ and kinematic viscosity ν = 1 mm²/s.

gdomovx-2p50-en_b_th

ELECTRICAL DATA TABLE

PUMP TYPE SINGLE-PHASE	ABSORBED POWER* kW	ABSORBED CURRENT* 220-240 V A	CAPACITOR µF / 450 V
GDOMO 7VX - (S7VX)	0,79 (0,83)	3,91 (4,03)	16
GDOMO 10VX	1,15	5,88	22
GDOMO 15VX	1,36	6,11	30
-	-	-	-

PUMP TYPE THREE-PHASE	ABSORBED POWER* kW	ABSORBED CURRENT* 220-240 V A	ABSORBED CURRENT* 380-415 V A
GDOMO 7VXT - (S7VXT)	0,71 (0,76)	2,56 (2,63)	1,48 (1,52)
GDOMO 10VXT	1,10	4,09	2,36
GDOMO 15VXT	1,26	4,31	2,49
GDOMO 20VXT	1,74	6,22	3,59

*Maximum values within operating range

gdomovx-2p50-en_b_te

GDOMO GRI SERIES
OPERATING CHARACTERISTICS AT 50 Hz

GDOMO GRI	~ 2900 [rpm]	ISO 9906:2012 - Grade 3B

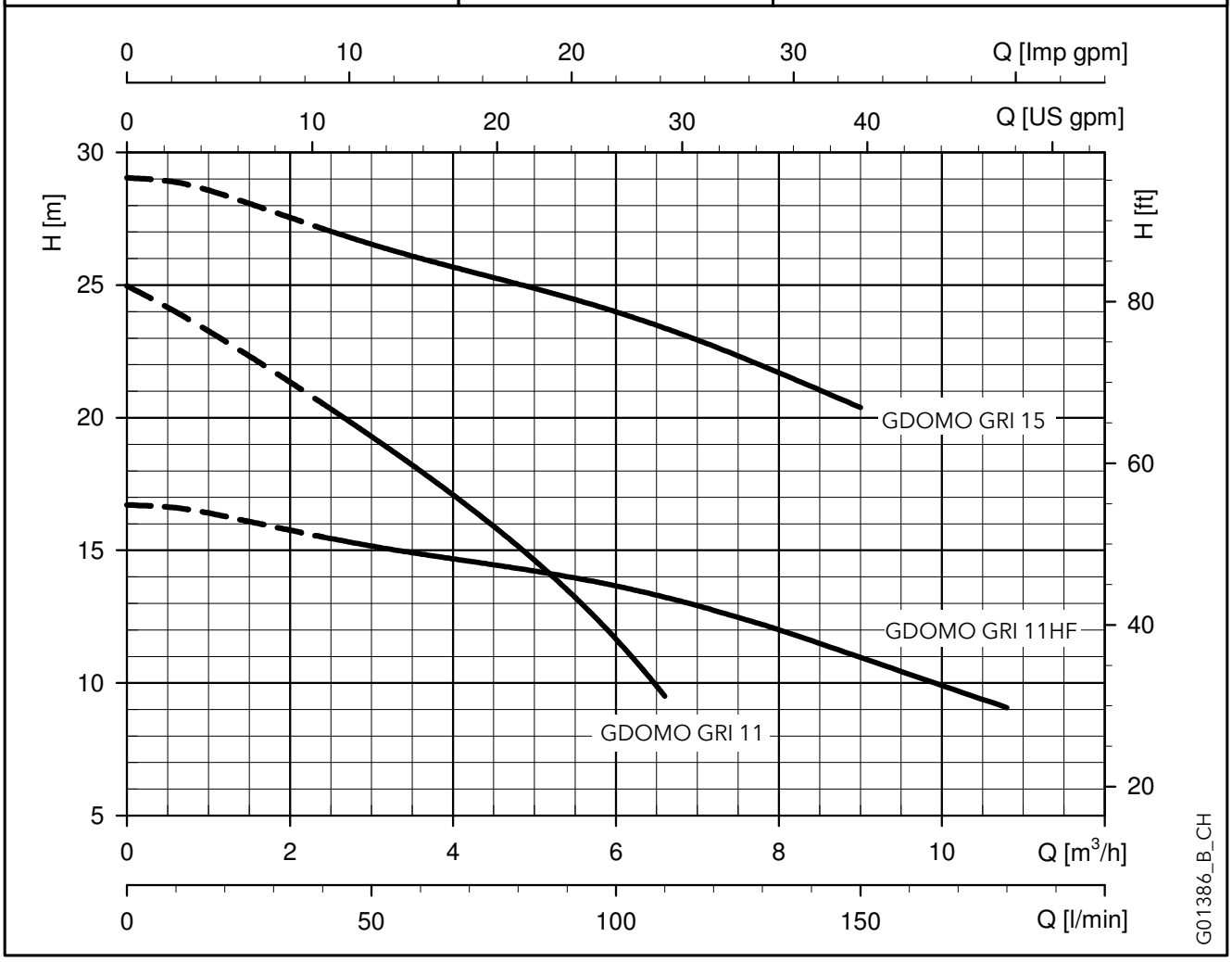

HYDRAULIC PERFORMANCE TABLE

PUMP TYPE	RATED POWER		Q = DELIVERY										
			l/s 0	0,7	0,9	1,1	1,7	1,9	2,2	2,4	2,6	2,8	3,0
			m³/h 0	2,4	3,2	3,9	6,2	7,0	7,7	8,5	9,3	10,0	10,8
	kW	HP	H = TOTAL HEAD METRES COLUMN OF WATER										
GDOMO GRI 11/A (SG)	1,1	1,5	25,0	20,5	18,9	17,3	10,9						
GDOMO GRI 11T/A	1,1	1,5	25,0	20,5	18,9	17,3	10,9						
GDOMO GRI 11 HF (SG)	1,1	1,5	16,7	15,5	15,1	14,7	13,5	12,9	12,3	11,5	10,7	9,9	9,1
GDOMO GRI 11T HF	1,1	1,5	16,7	15,5	15,1	14,7	13,5	12,9	12,3	11,5	10,7	9,9	9,1
GDOMO GRI 15 (SG)	1,5	2	29,0	27,1	26,4	25,7	23,8	23,0	22,0	21,0			
GDOMO GRI 15T	1,5	2	29,0	27,1	26,4	25,7	23,8	23,0	22,0	21,0			

These performances are valid for liquids with density r = 1,0 kg/dm³ and kinematic viscosity n = 1 mm²/s.

gdomo-gri-2p50-en_b_th

ELECTRICAL DATA TABLE

PUMP TYPE SINGLE-PHASE	ABSORBED POWER* kW	ABSORBED CURRENT* 220-240 V A	CAPACITOR µF / 450 V
GDOMO GRI 11/A (SG)	1,50	6,84	30
GDOMO GRI 11HF	1.09	4,97	30
GDOMO GRI 15 (SG)	1,93	8,44	40

PUMP TYPE THREE-PHASE	ABSORBED POWER* kW	ABSORBED CURRENT* 220-240 V A	ABSORBED CURRENT* 380-415 V A
GDOMO GRI 11T/A	1,39	4,55	2,63
GDOMO GRI 11T HF	0,96	3,81	2,2
GDOMO GRI 15T	1,57	5,94	3,43

* Maximum value in specified range

gdomo-gri-2p50-en_c_te

GDOMO SERIES
DIMENSIONS AND WEIGHTS

GDOMO

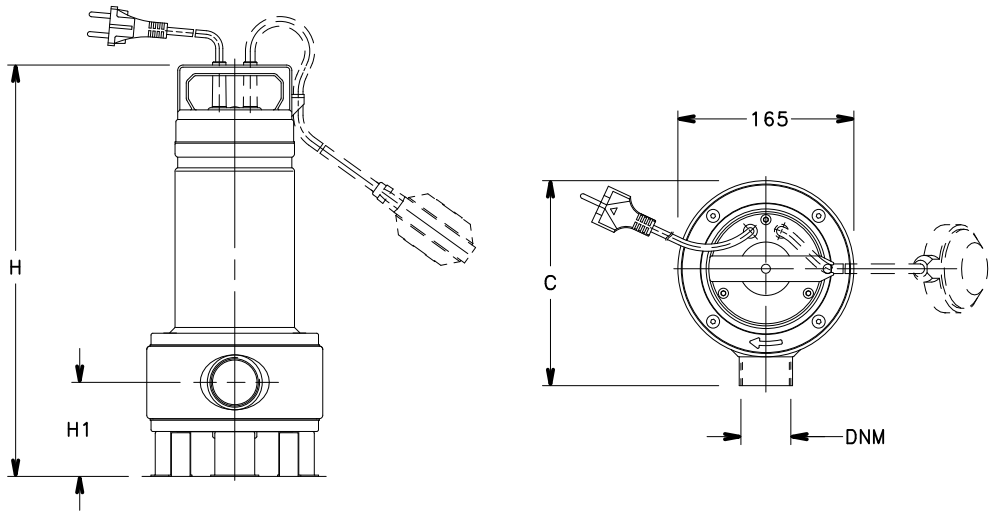

PUMP TYPE SINGLE-PHASE		DIMENSIONS (mm)			DNM	WEIGHT
		H	H1	C		kg
GDOMO 7 GDOMO 7VX	GDOMO 7 GT GDOMO 7VX GT	391	88	193	Rp1½	10,2
GDOMO10 GDOMO10VX	GDOMO10 GT GDOMO10VX GT	468	111,5	198	Rp2	13,6
GDOMO15 GDOMO15VX	GDOMO15 GT GDOMO15VX GT	468	111,5	198	Rp2	15,3
-	-	-	-	-	-	-

PUMP TYPE THREE-PHASE	DIMENSIONS (mm)			DNM	WEIGHT
	H	H1	C		kg
GDOMO 7T GDOMO 7VXT	391	88	193	Rp1½	8,9
GDOMO10T GDOMO10VXT	438	111,5	198	Rp2	11,6
GDOMO15T GDOMO15VXT	468	111,5	198	Rp2	13,6
GDOMO20T GDOMO20VXT	468	111,5	198	Rp2	14,6

gdomo-2p50-en_c_td

GDOMO GT

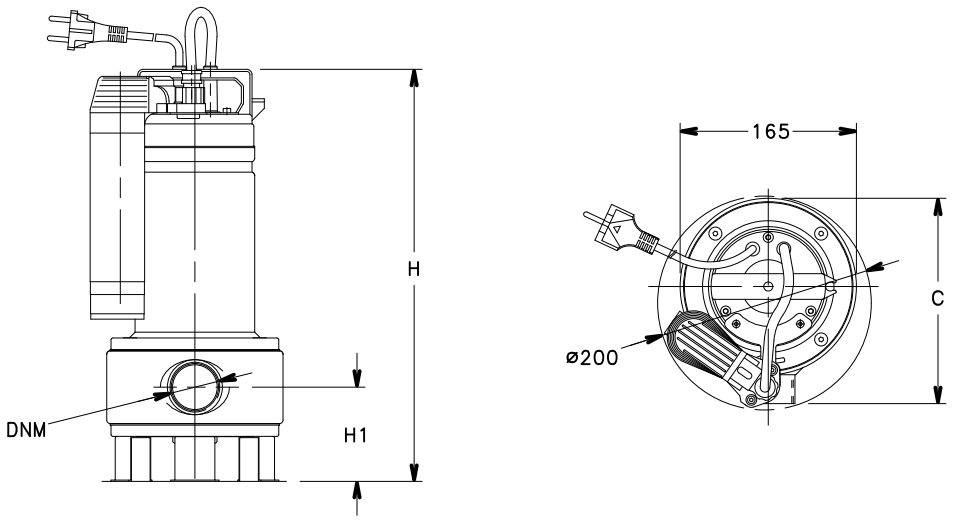

GDOMO - GDOMO GRI SERIES
INSTALLATION EXAMPLES

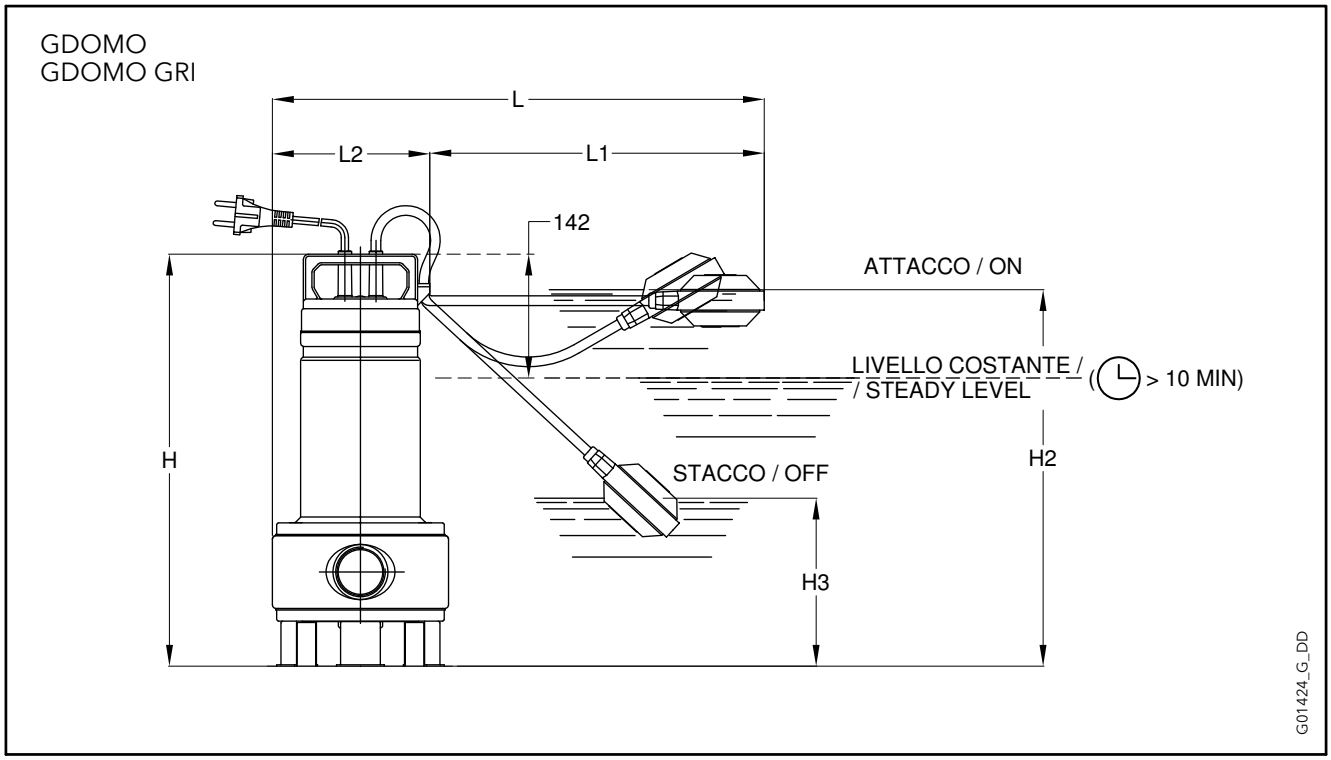

PUMP TYPE		DIMENSIONS (mm)						
		H	H2	H3	L	L1	L2	A
GDOMO 7 - GDOMO 7 GT	GDOMO 7VX - GDOMO 7VX GT	391	375	155	420	275	145	225
GDOMO10 - GDOMO10 GT	GDOMO10VX - GDOMO10VX GT	468	420	155	495	350	145	255
GDOMO15 - GDOMO15 GT	GDOMO15VX - GDOMO15VX GT	468	420	155	495	350	145	255
GDOMO GRI 11	-	446	400	135	508	350	158	-

gdomoliv-2p50-en_d_td

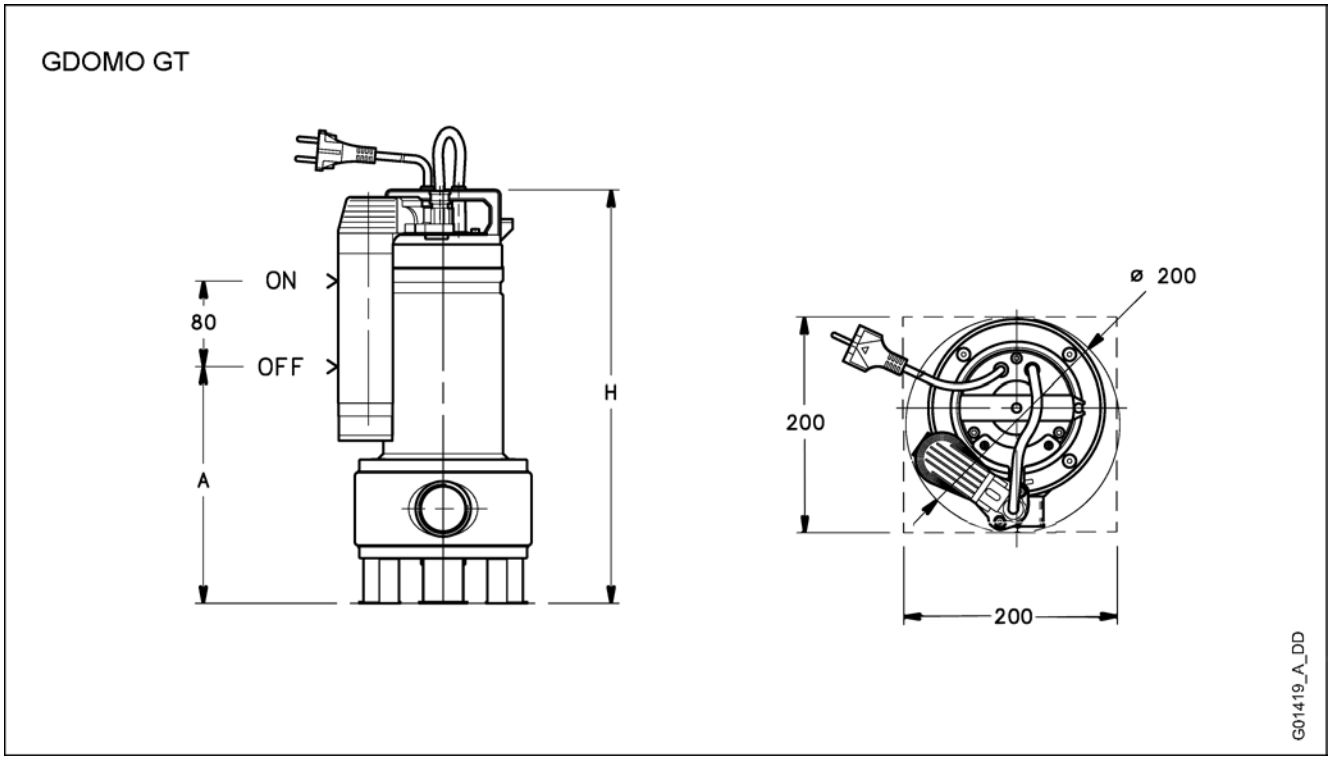

GDOMO SERIES
INSTALLATION WITH SD LOWERING DEVICE

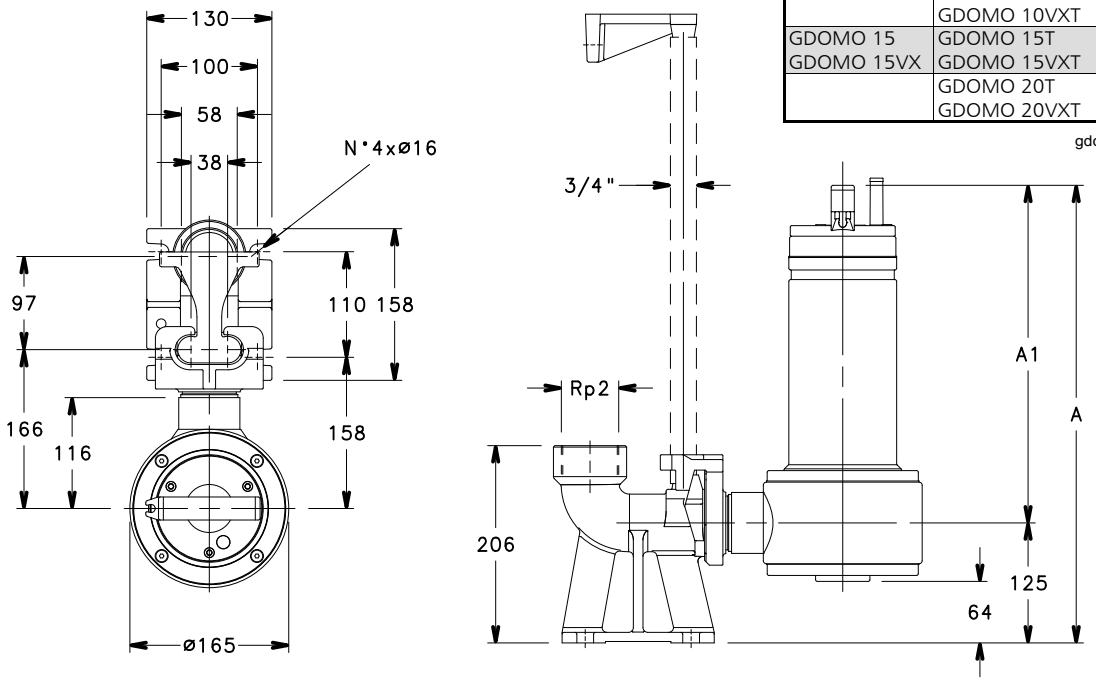

PUMP TYPE		DIMENSIONS (mm)	
SINGLE-PHASE	THREE-PHASE	A	A1
GDOMO 10 GDOMO 10VX		482	357
	GDOMO 10T GDOMO 10VXT	452	327
GDOMO 15 GDOMO 15VX	GDOMO 15T GDOMO 15VXT	482	357
	GDOMO 20T GDOMO 20VXT	482	357

gdomo-sd-2p50-en_b_td

GDOMO GRI SERIES
DIMENSIONS AND WEIGHTS

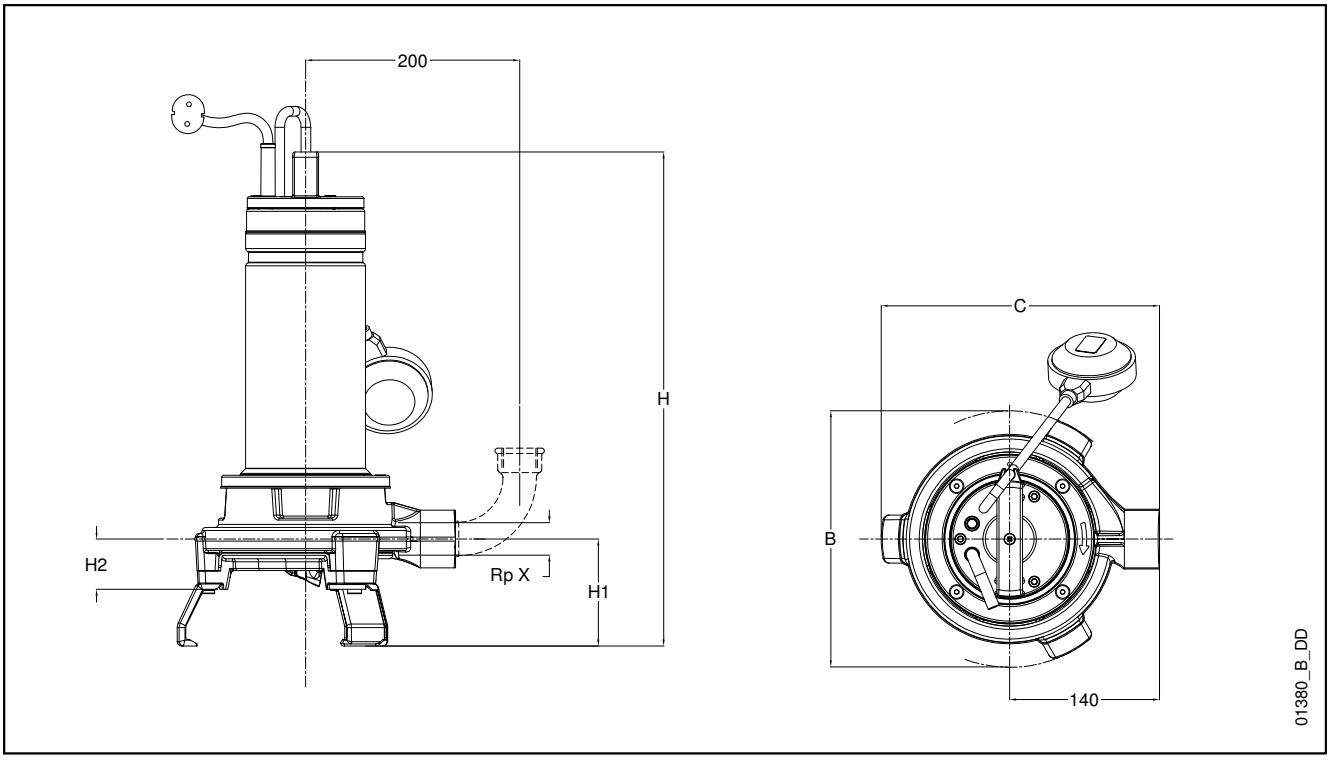

PUMP TYPE	DIMENSIONS (mm) B	C	H1	H2	H	X	WEIGHT kg
GDOMO GRI 11/A (SG)	240	260	100	47	442	Rp 1"	20,8 (20,6)
GDOMO GRI 11T/A	240	260	100	47	442	Rp 1"	20,1
GDOMO GRI 11HF (SG)	240	260	100	47	444	Rp 1" 1/4	20,8 (20,6)
GDOMO GRI 11T HF	240	260	100	47	444	Rp 1" 1/4	20,1
GDOMO GRI 15 (SG)	240	260	100	47	462	Rp 1" 1/4	23 (22,8)
GDOMO GRI 15T	240	260	100	47	442	Rp 1" 1/4	22,3

gdomo-gri-en_c_td

INSTALLATION WITH SD LOWERING DEVICE

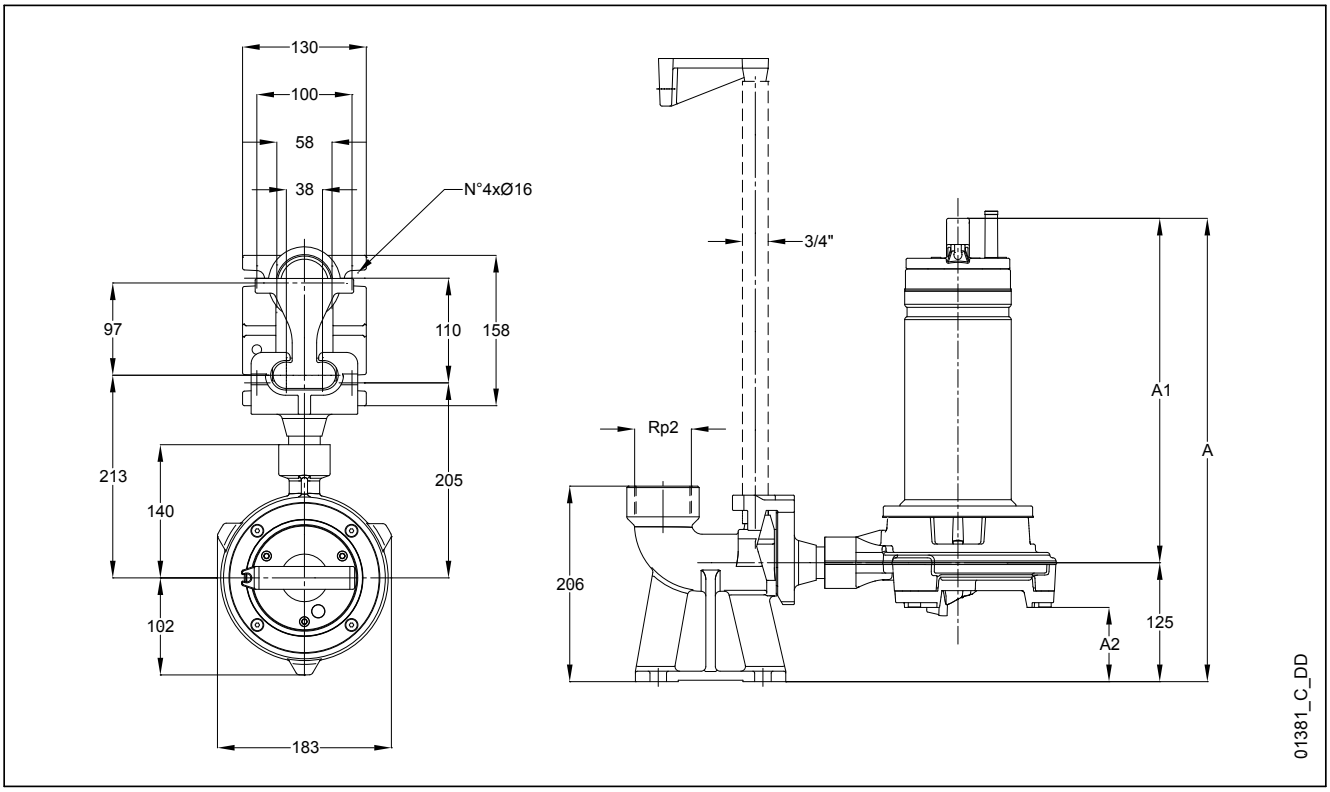

GOULDS WATER TECHNOLOGY
a xylem brand

Submersible Electric Pumps for drainage of clean and slightly dirty water

Drainage pumps with up to 22 metres head and up to 280 l/min (16,8 m3/h) delivery. This range consists of three pumps with up to 0,75 kW rated power.

GDN Series

APPLICATIONS

- Draining of flooded excavations and marshy ground.
- Irrigation from rainwater resevoirs, ditches, ponds and watercourses.

SPECIFICATIONS

- **Maximum liquid temperature**:
  - **50°C** with fully submerged pump.
  - **25°C** with partially submerged pump.
- Open **impeller** with **abrasion-resistant** rubber coating.
- **Mechanical seal** protected by **sand labyrinth**.
- Maximum dimension of **suspended solids**: **5 mm**.
- **Motor** in a dielectric non-toxic **oil bath**, which ensures the lubrification of the ball bearings and a more efficient cooling.
- **Power cord**: **H07RN-F**.
  - single-phase: with plug.
  - three-phase: without plug.
- **Insulation class 155°C (F)**.
- **IPX8 protection**.
- **Maximum immersion depth**: **5 m**.
- **Versions**:
  - Single-phase: 220-240V, 50Hz 2 poles.
  - Three-phase: 220-240V, 50Hz 2 poles.
    380-415V, 50Hz 2 poles.
- **The single-phase versions** feature:
  - **capacitor** housed in a box on the power cord + 1,5 m. power cord with plug.
  - **thermal overload protection** to stop pump supply in case of overheating.
- CG versions (single-phase with pre-assembled float switch), 60 Hz single-phase and three-phase versions, versions with various power cord lengths and various plugs are available on request.

GDN SERIES
IDENTIFICATION CODE

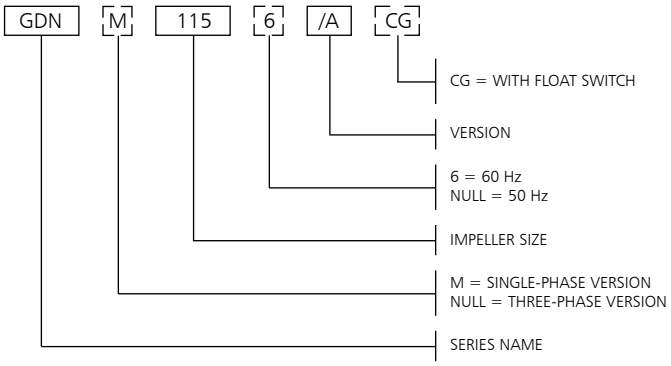

EXAMPLE : GDNM 115/A
GDN Series Electric pump, impeller size 115,
50 Hz version, single-phase, /A version.

SINGLE-PHASE RATING PLATE

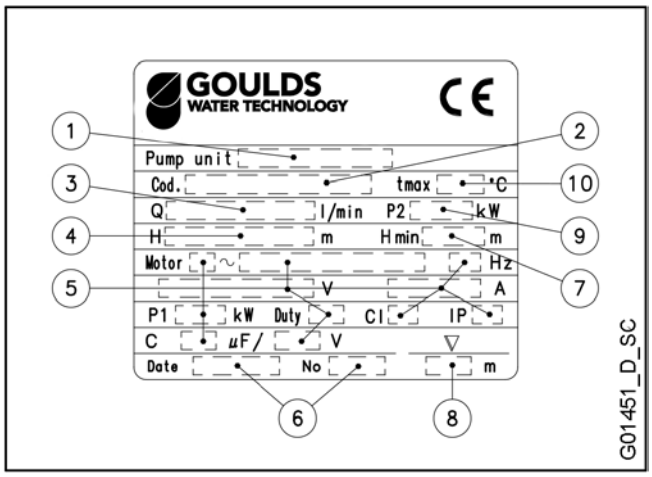

THREE-PHASE RATING PLATE

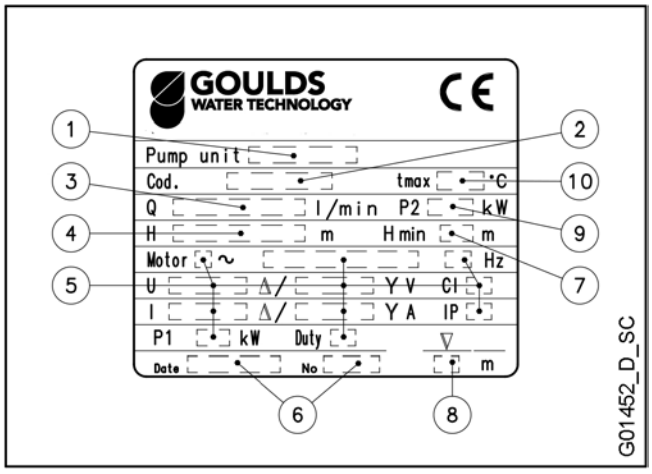

LEGEND

1 - Electric pump type

2 - Code

3 - Delivery range

4 - Head range

5 - Motor type

6 - Date of manufacture and serial number

7 - Minimum head

8 - Maximum immersion depth

9 - Rated output

10 - Maximum liquid temperature

GDN SERIES
LIST OF MODELS AND TABLE OF MATERIALS

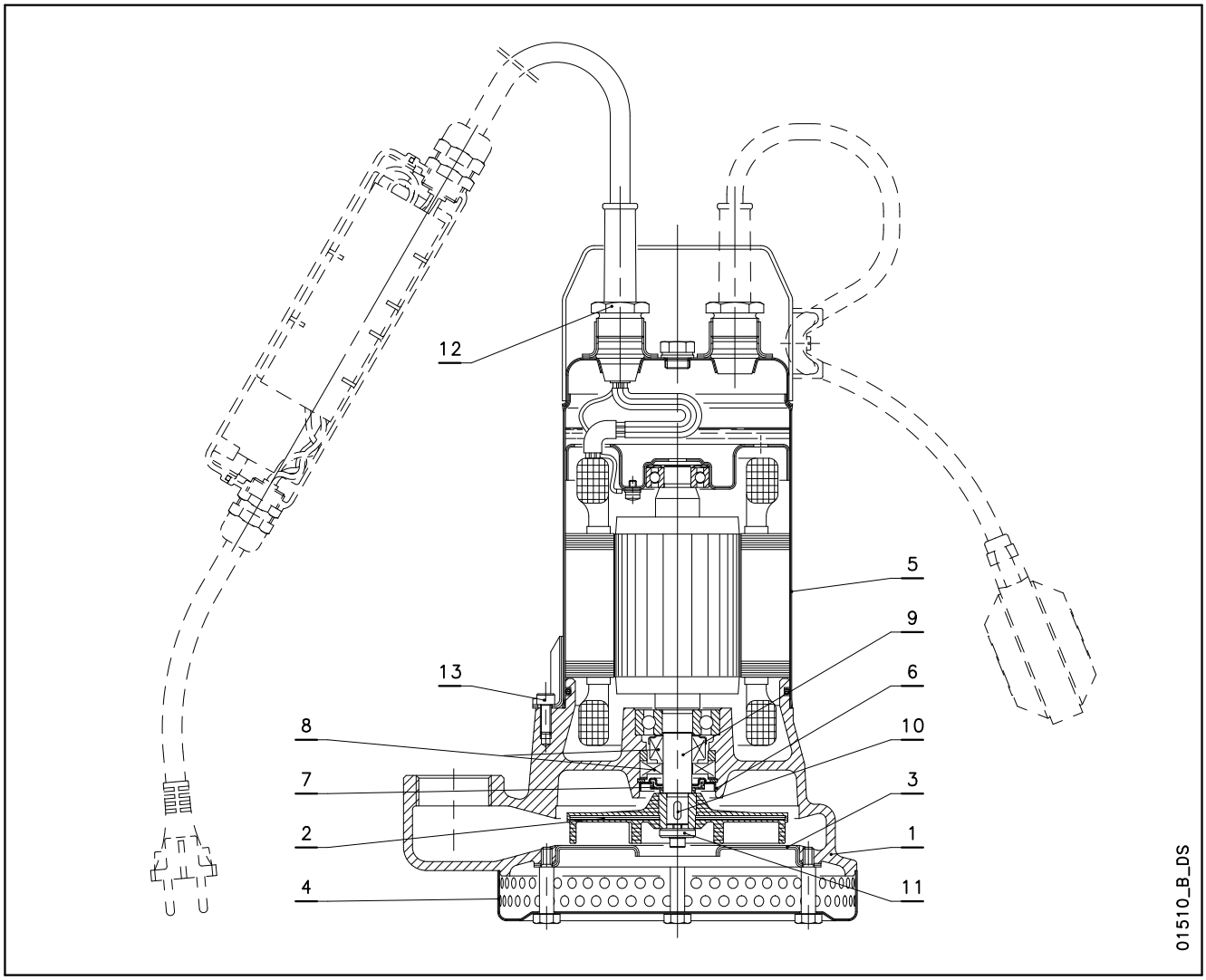

REF. N.	NAME	MATERIAL	REFERENCE STANDARDS	
			EUROPE	USA
1	Pump body	Cast iron	EN 1561-GJL-200(JL1030)	ASTM Class 25
2	Impeller	Steel + Nitrile Rubber XNBR		
3	Wearing flange	Stainless steel	EN 10088-1-X5CrNi18-10 (1.4301)	AISI 304
4	Suction strainer	Stainless steel	EN 10088-1-X5CrNi18-10 (1.4301)	AISI 304
5	Motor casing	Stainless steel	EN 10088-1-X5CrNi18-10 (1.4301)	AISI 304
6	Labyrinth cover	Stainless steel	EN 10088-1-X5CrNi18-10 (1.4301)	AISI 304
7	Labyrinth insert	NBR (standard version)		
8	Mechanical seal	Carbon / Ceramic Alumina / NBR (standard version)		
9	Shaft end	Stainless steel	EN 10088-1-X5CrNi18-10 (1.4301)	AISI 304
10	Key	Stainless steel	EN 10088-1-X5CrNiMo17-12-2 (1.4401)	AISI 316
11	Washer	Stainless steel		AISI 303
12	Cable gland	Brass		
13	Screws	Stainless steel	EN 10088-1-X5CrNi18-10 (1.4301)	AISI 304

dn-en_b_tm

GDN SERIES
MECHANICAL SEAL

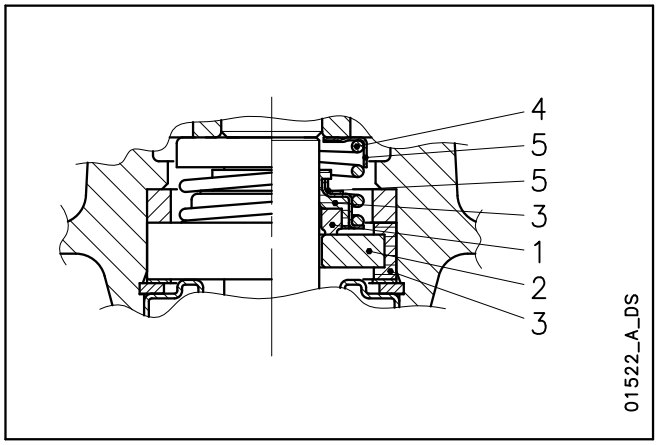

LIST OF MATERIALS

POSITION 1 - 2	POSITION 3	POSITION 4 - 5
B : Carbon	P : NBR	F : AISI 304
V : Ceramic Alumina		

dn-dl-dlv_ten-mec-en_c_tm

SEAL TYPES

TYPE	POSITION					TEMPERATURE (°C)
	1	2	3	4	5	
	ROTATING ASSEMBLY	FIXED ASSEMBLY	ELASTOMERS	SPRINGS	OTHER COMPONENTS	
STANDARD MECHANICAL SEAL						
BVPFF	B	V	P	F	F	0 +50

dn-dl-dlv_tipi-ten-mec-en_b_tc

GDN SERIES
OPERATING CHARACTERISTICS AT 50 Hz

GDN - GDNM	~ 2850 [rpm]	ISO 9906:2012 - Grade 3B

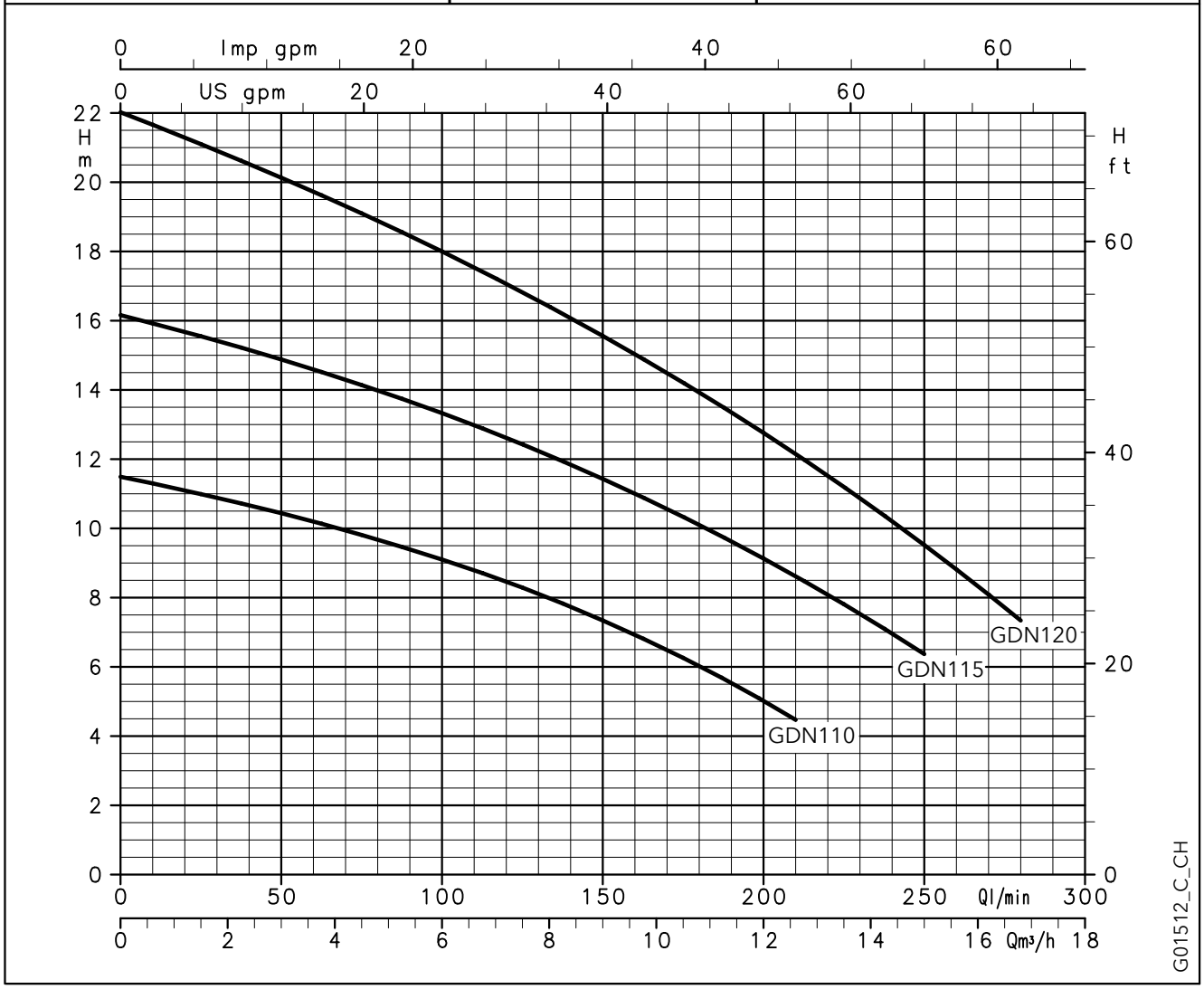

HYDRAULIC PERFORMANCE TABLE

PUMP TYPE	RATED POWER		Q = DELIVERY											
			l/min	0	25	50	75	100	125	150	175	210	225	250	280
			m³/h	0	1,5	3	4,5	6	7,5	9	10,5	12,6	13,5	15	16,8
	kW	HP	H = TOTAL HEAD METRES COLUMN OF WATER												
GDN(M) 110	0,6	0,8		11,5	11,0	10,4	9,8	9,1	8,3	7,3	6,3	4,5			
GDN(M) 115	0,6	0,8		16,2	15,6	14,9	14,1	13,3	12,4	11,4	10,3	8,6	7,8	6,4	
GDN(M) 120	0,75	1		22,0	21,1	20,1	19,1	18,0	16,8	15,6	14,2	12,1	11,2	9,5	7,3

These performances are valid for liquids with density ρ = 1,0 kg/dm³ and kinematic viscosity ν = 1 mm²/s. gdn-2p50-en_a_th

ELECTRICAL DATA TABLE

PUMP TYPE SINGLE-PHASE	ABSORBED POWER* kW	ABSORBED CURRENT* 220-240 V A	CAPACITOR µF / 450 V
GDNM 110	0,68	3,56	25
GDNM 115	0,90	4,28	25
GDNM 120	1,03	4,77	25

PUMP TYPE THREE-PHASE	ABSORBED POWER* kW	ABSORBED CURRENT* 220-240 V A	ABSORBED CURRENT* 380-415 V A
GDN 110	0,66	3,46	2,00
GDN 115	0,93	3,81	2,20
GDN 120	1,09	4,05	2,34

*Maximum values within operating range. gdn-2p50-en_b_te

GDN SERIES
DIMENSIONS AND WEIGHTS

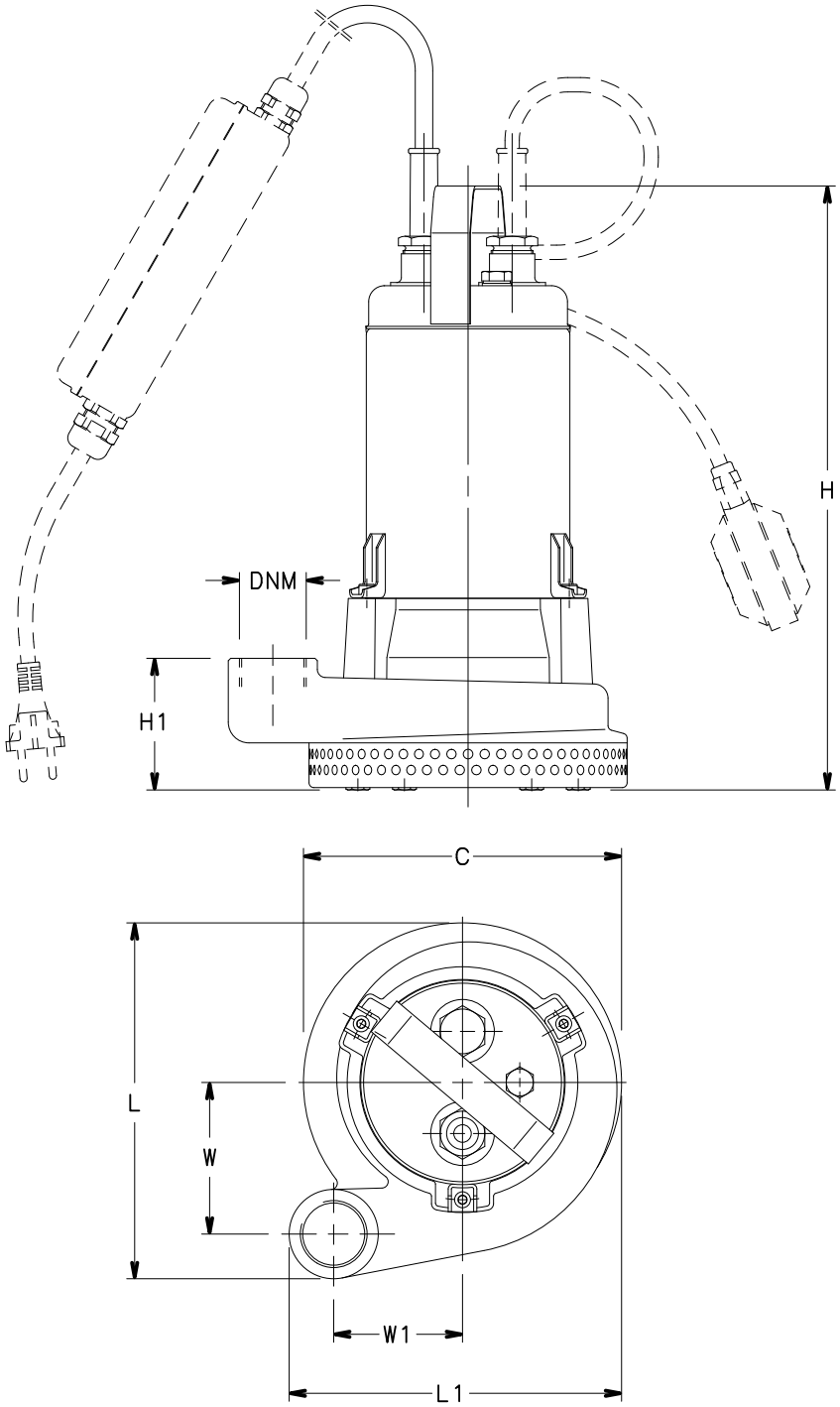

PUMP TYPE	DIMENSIONS (mm)							DNM	WEIGHT
	C	H	H1	L	L1	W	W1		kg
GDNM110-GDN110	Ø 200	380	81	223	209	95	81	Rp 1¼	18,5
GDNM115-GDN115	Ø 200	380	81	223	209	95	81	Rp 1¼	18,5
GDNM120-GDN120	Ø 200	380	81	223	209	95	81	Rp 1¼	19,5

gdn-2p50-en_b_td

GOULDS WATER TECHNOLOGY
a xylem brand

Submersible Electric Pumps for pumping sewage

The GDL series electric pumps come with single-channel or Vortex impeller (GDLV), and are designed to hanGDLe solids-laden wastewater, with up to 22 m head and 42 m3/h delivery.
0,6 kW to 1,5 kW rated power.
Solids hanGDLed up to 50 mm in diameter.

GDL Series

APPLICATIONS

- Pumping of sewage with suspended solids and filaments.
- Emptying of sumps, septic tanks and wastewater discharge tanks.
- Draining of flooded excavations and marshy ground.

SPECIFICATIONS

- **Maximum liquid temperature**:
  - **50°C** with fully submerged pump.
  - **25°C** with partially submerged pump.
- **Mechanical seal** protected by **sand labyrinth**.
- Maximum dimension of **suspended solids**:
  - **45 mm** for **GDL80, GDL90, GDL105, MINIVORTEX, VORTEX**.
  - **50 mm** for **GDL109, GDL125, GDLV100, GDLV115**.
- **Motor** in a dielectric non-toxic **oil bath**, which ensures the lubrification of the ball bearings and a more efficient cooling.
- **Power cord**: **H07RN-F**.
  - single-phase: with plug.
  - three-phase: without plug.
- **Insulation class 155°C (F)**.
- **IPX8 protection**.
- **Maximum immersion depth**: **5 m**.
- **Versions**:
  - Single-phase: 220-240V, 50Hz 2 poles.
  - Three-phase: 220-240V, 50Hz 2 poles.
    380-415V, 50Hz 2 poles.
- **The single-phase versions** feature:
  - **capacitor** housed in a box on the power cord + 1,5 m. power cord with plug.
  - **thermal overload protection** to stop pump supply in case of overheating.
- CG versions (single-phase with pre-assembled float switch), 60 Hz single-phase and three-phase versions, versions with various power cord lengths and various plugs are available on request.

GDL - GDLV SERIES IDENTIFICATION CODE

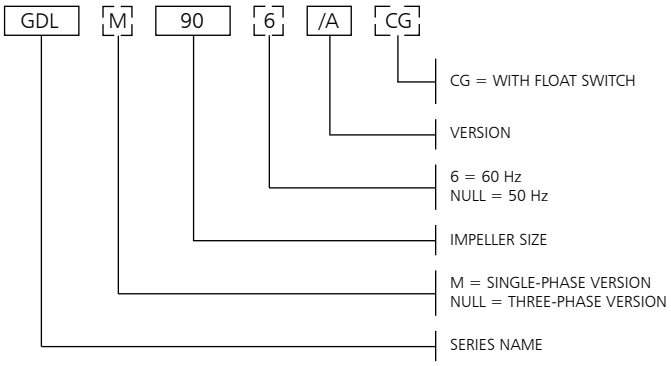

EXAMPLE : GDLM 90/A
GDL Series electric pump, impeller size 90,
50 Hz version, single-phase, /A version.

SINGLE-PHASE RATING PLATE

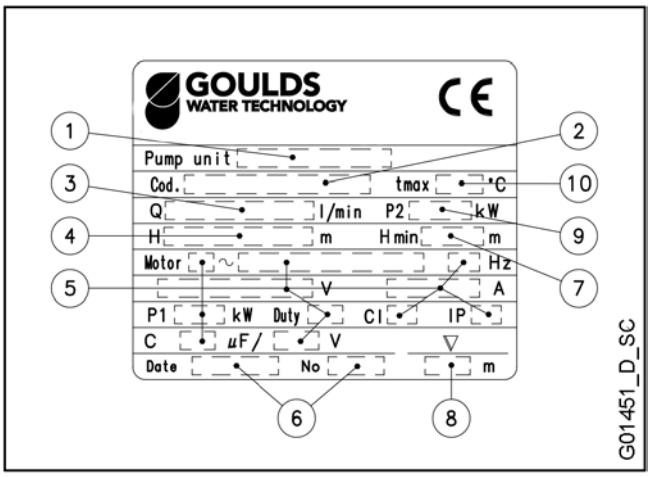

THREE-PHASE RATING PLATE

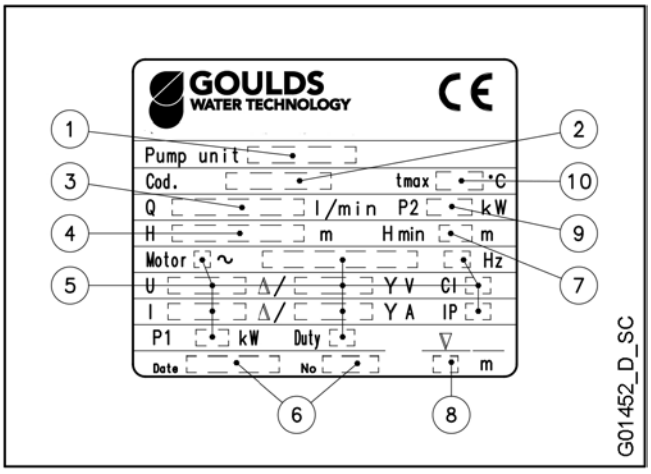

LEGEND

1 - Electric pump type

2 - Code

3 - Delivery range

4 - Head range

5 - Motor type

6 - Date of manufacture and serial number

7 - Minimum head

8 - Maximum immersion depth

9 - Rated output

10 - Maximum liquid temperature

GDL - VORTEX SERIES
LIST OF MODELS AND TABLE OF MATERIALS

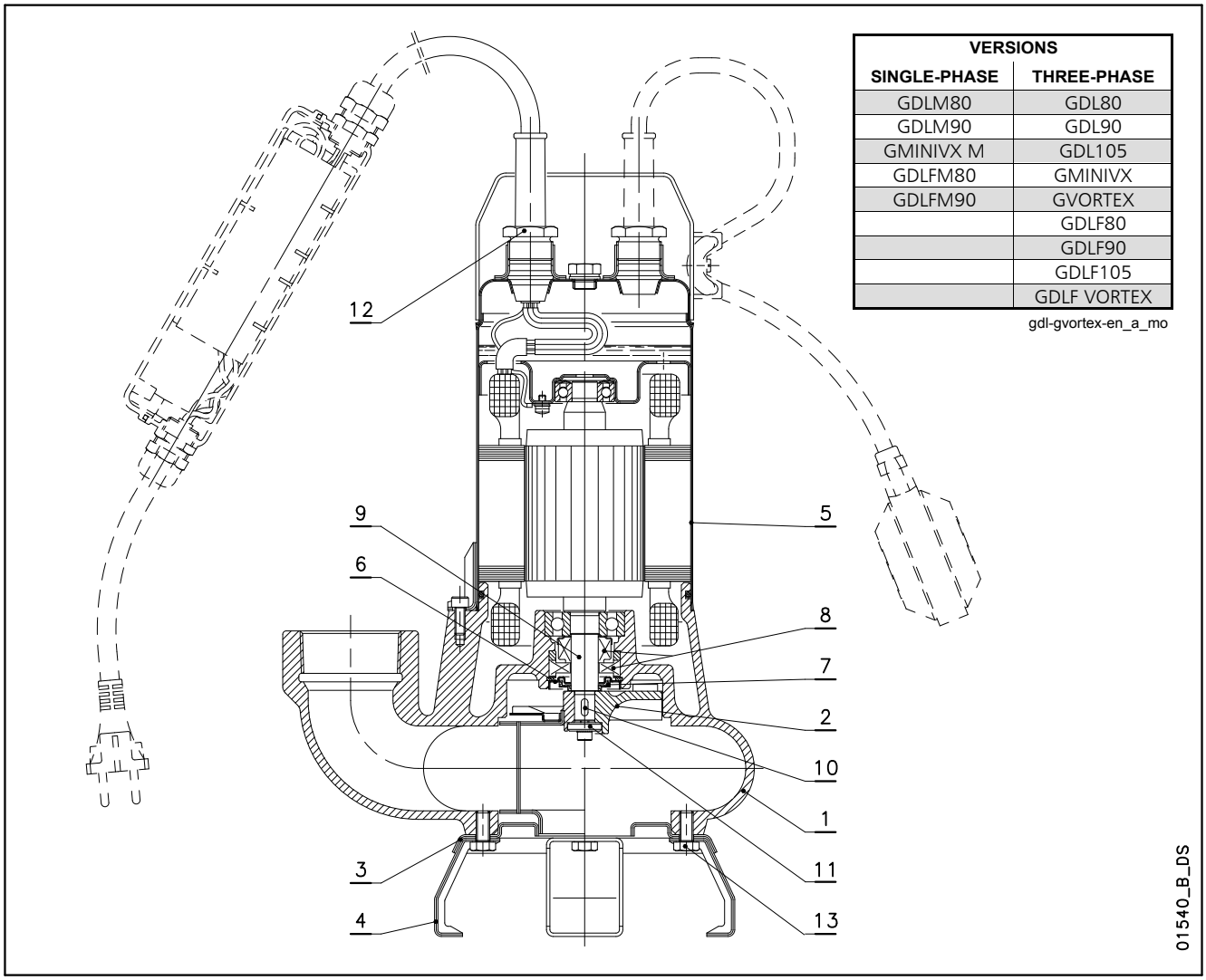

VERSIONS	
SINGLE-PHASE	THREE-PHASE
GDLM80	GDL80
GDLM90	GDL90
GMINIVX M	GDL105
GDLFM80	GMINIVX
GDLFM90	GVORTEX
	GDLF80
	GDLF90
	GDLF105
	GDLF VORTEX

gdl-gvortex-en_a_mo

REF. N.	NAME	MATERIAL	REFERENCE STANDARDS	
			EUROPE	USA
1	Pump body	Cast iron	EN 1561-GJL-200(JL1030)	ASTM Class 25
2	Vortex impeller	Cast iron	EN 1561-GJL-200(JL1030)	ASTM Class 25
	Single-channel impeller	Stainless steel	EN 10088-1-X5CrNi18-10 (1.4301)	AISI 304
3	Suction flange	Stainless steel	EN 10088-1-X5CrNi18-10 (1.4301)	AISI 304
4	Support foot	Stainless steel	EN 10088-1-X5CrNi18-10 (1.4301)	AISI 304
5	Motor casing	Stainless steel	EN 10088-1-X5CrNi18-10 (1.4301)	AISI 304
6	Labyrinth cover	Stainless steel	EN 10088-1-X5CrNi18-10 (1.4301)	AISI 304
7	Labyrinth insert	NBR (standard version)		
8	Mechanical seal	Carbon / Ceramic Alumina / NBR (standard version)		
9	Shaft end	Stainless steel	EN 10088-1-X5CrNi18-10 (1.4301)	AISI 304
10	Key	Stainless steel	EN 10088-1-X5CrNiMo17-12-2 (1.4401)	AISI 316
11	Washer	Stainless steel		AISI 303
12	Cable gland	Brass		
13	Screws	Stainless steel	EN 10088-1-X5CrNi18-10 (1.4301)	AISI 304

dl-vortex-en_b_tm

GDL - GDLV SERIES
LIST OF MODELS AND TABLE OF MATERIALS

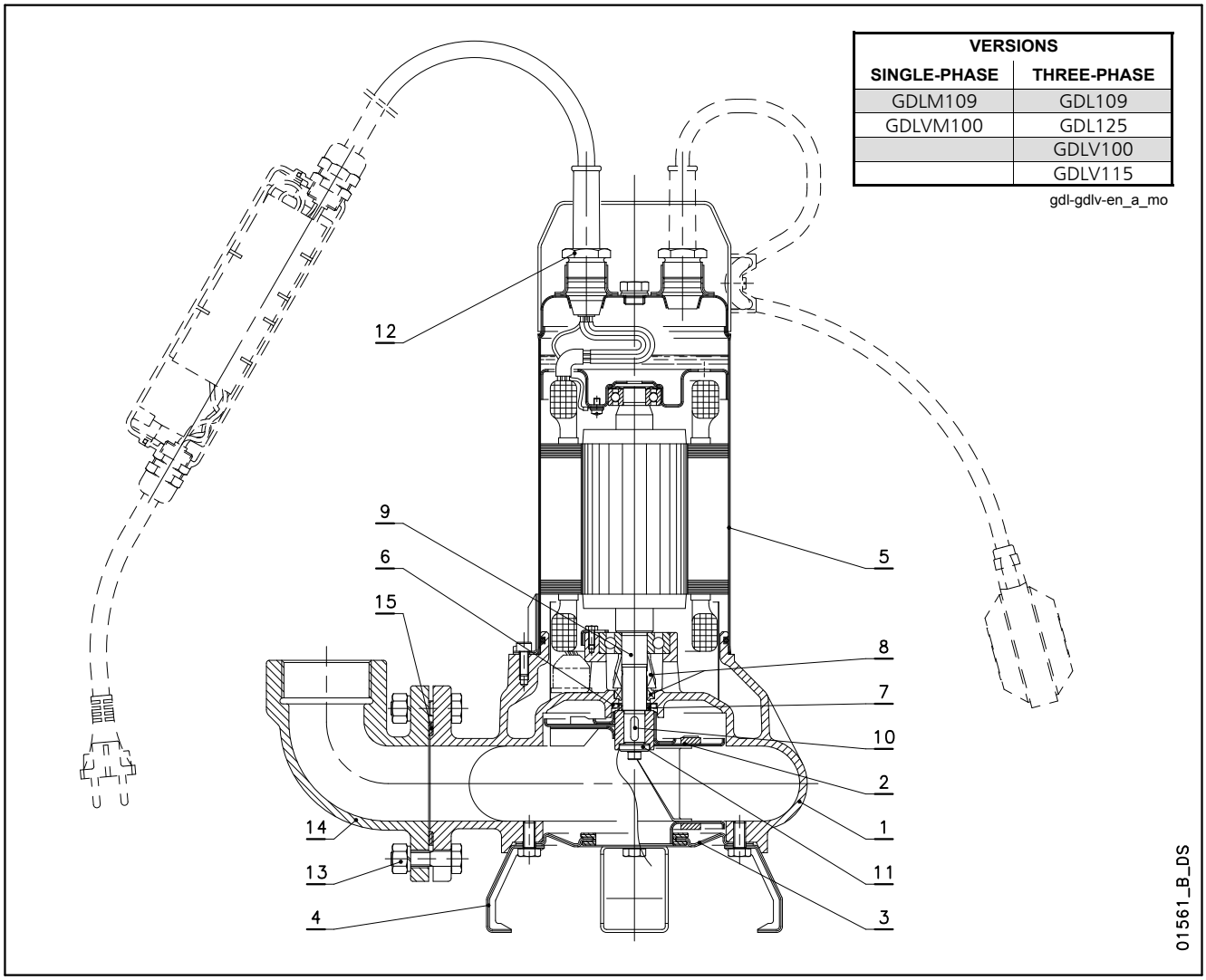

VERSIONS	
SINGLE-PHASE	THREE-PHASE
GDLM109	GDL109
GDLVM100	GDL125
	GDLV100
	GDLV115

gdl-gdlv-en_a_mo

REF. N.	NAME	MATERIAL	REFERENCE STANDARDS	
			EUROPE	USA
1	Pump body	Cast iron	EN 1561-GJL-200(JL1030)	ASTM Class 25
2	Vortex impeller	Stainless steel	EN 10088-1-X5CrNi18-10 (1.4301)	AISI 304
	Single-channel impeller	Stainless steel	EN 10088-1-X5CrNi18-10 (1.4301)	AISI 304
3	Suction flange	Stainless steel	EN 10088-1-X5CrNi18-10 (1.4301)	AISI 304
4	Support foot	Stainless steel	EN 10088-1-X5CrNi18-10 (1.4301)	AISI 304
5	Motor casing	Stainless steel	EN 10088-1-X5CrNi18-10 (1.4301)	AISI 304
6	V-RING Cover	Stainless steel	EN 10088-1-X5CrNi18-10 (1.4301)	AISI 304
7	V16A Seal ring	NBR (standard version)		
8	Mechanical seal	Carbon / Ceramic Alumina / NBR (standard version)		
9	Shaft end	Stainless steel	EN 10088-1-X5CrNi18-10 (1.4301)	AISI 304
10	Key	Stainless steel	EN 10088-1-X5CrNiMo17-12-2 (1.4401)	AISI 316
11	Washer	Stainless steel		AISI 303
12	Cable gland	Brass		
13	Screws	Stainless steel	EN 10088-1-X5CrNi18-10 (1.4301)	AISI 304
14	Delivery connection	Cast iron	EN 1561-GJL-200(JL1030)	ASTM Class 25
15	Delivery connction gasket	Nitrile rubber		

dl-dlv-en_b_tm

GDL80 - GDL90 - GDL105 - MINIVORTEX - VORTEX SERIES
MECHANICAL SEAL

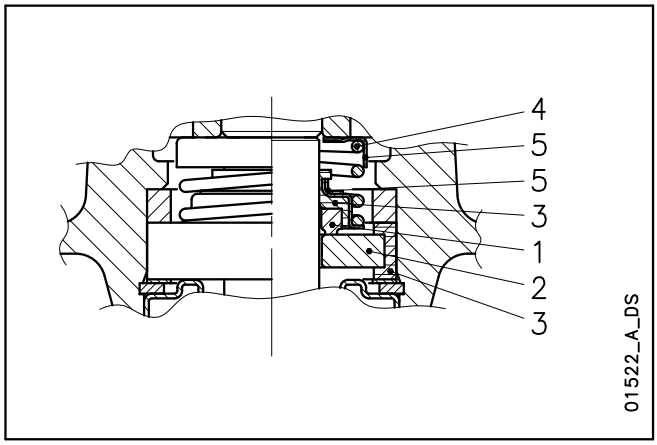

LIST OF MATERIALS

POSITION 1 - 2	POSITION 3	POSITION 4 - 5
B : Carbon	P : NBR	F : AISI 304
V : Ceramic Alumina		

dn-dl-dlv_ten-mec-en_c_tm

SEAL TYPES

TYPE	POSITION					TEMPERATURE (°C)
	1	2	3	4	5	
	ROTATING ASSEMBLY	FIXED ASSEMBLY	ELASTOMERS	SPRINGS	OTHER COMPONENTS	
STANDARD MECHANICAL SEAL						
BVPFF	B	V	P	F	F	0 +50

dn-dl-dlv_tipi-ten-mec-en_b_tc

GDL109 - GDL125 - GDLV100 - GDLV115 SERIES MECHANICAL SEAL

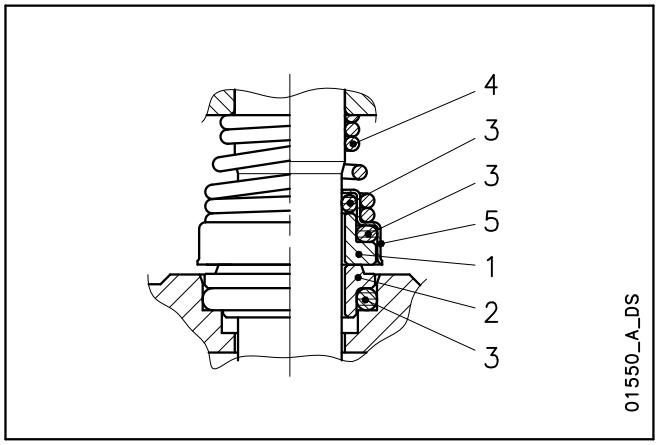

LIST OF MATERIALS

POSITION 1 - 2	POSITION 3	POSITION 4 - 5
B : Carbon	P : NBR	G : AISI 316
U_3 : Tungsten Carbide	V : FPM	F : AISI 304
V : Ceramic Alumina		

dl-dlv_ten-mec-en_a_tm

SEAL TYPES

TYPE	POSITION					TEMPERATURE (°C)
	1	2	3	4	5	
	ROTATING ASSEMBLY	FIXED ASSEMBLY	ELASTOMERS	SPRINGS	OTHER COMPONENTS	
STANDARD MECHANICAL SEAL						
VBPGF	V	B	P	G	F	0 +50
OTHER MECHANICAL SEAL TYPES						
U_3U_3VFF	U_3	U_3	V	F	F	0 +50

dl-dlv_tipi-ten-mec-en_b_tc

GOULDS WATER TECHNOLOGY
a xylem brand

GDL SERIES
OPERATING CHARACTERISTICS AT 50 Hz

GDL	~ 2850 [rpm]	ISO 9906:2012 - Grade 3B

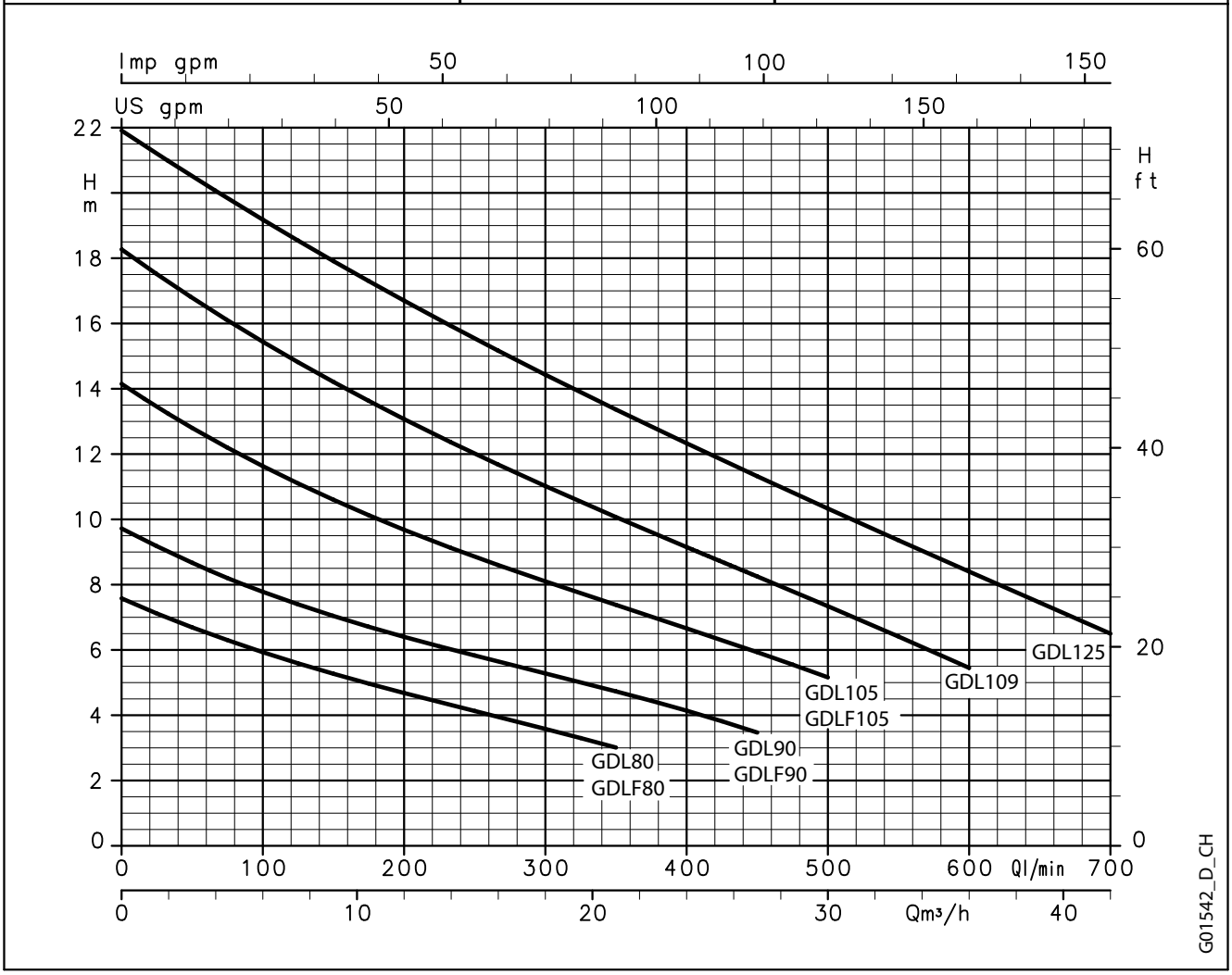

HYDRAULIC PERFORMANCE TABLE

PUMP TYPE	RATED POWER		Q = DELIVERY											
			l/min	0	100	150	200	250	300	350	400	450	500	600	700
			m³/h	0	6	9	12	15	18	21	24	27	30	36	42
	kW	HP	H = TOTAL HEAD METRES COLUMN OF WATER												
GDL(M) 80-GDLF(M) 80	0,6	0,8		7,6	5,9	5,3	4,7	4,1	3,6	3,0					
GDL(M) 90-GDLF(M) 90	0,6	0,8		9,7	7,8	7,0	6,4	5,8	5,3	4,7	4,1	3,5			
GDL 105 - GDLF105	1,1	1,5		14,1	11,6	10,6	9,7	8,9	8,1	7,4	6,7	5,9	5,2		
GDL(M) 109	1,1	1,5		18,3	15,4	14,2	13,1	12,0	11,0	10,1	9,2	8,2	7,3	5,4	
GDL 125	1,5	2		21,9	19,2	17,9	16,7	15,5	14,4	13,4	12,3	11,3	10,3	8,4	6,5

These performances are valid for liquids with density ρ = 1,0 kg/dm³ and kinematic viscosity ν = 1 mm²/s.

gdl-2p50-en_b_th

ELECTRICAL DATA TABLE

PUMP TYPE SINGLE-PHASE	ABSORBED POWER* kW	ABSORBED CURRENT* 220-240 V A	CAPACITOR µF / 450 V
GDLM80-GDLFM80	0,79	3,91	25
GDLM90-GDLFM90	0,89	4,27	25
-	-	-	-
GDLM109	1,55	6,87	35
-	-	-	-

PUMP TYPE THREE-PHASE	ABSORBED POWER* kW	ABSORBED CURRENT* 220-240 V A	ABSORBED CURRENT* 380-415 V A
GDL80-GDLF80	0,8	-	2,09
GDL90-GDLF90	0,92	3,81	2,2
GDL105-GDLF105	1,43	4,66	2,69
GDL109	1,54	5,44	3,14
GDL125	2,14	6,58	3,8

*Maximum values within operating range.

gdl-2p50-en_b_te

GOULDS WATER TECHNOLOGY
a xylem brand

GDLV SERIES
OPERATING CHARACTERISTICS AT 50 Hz

GDLV	~ 2850 [rpm]	ISO 9906:2012 - Grade 3B

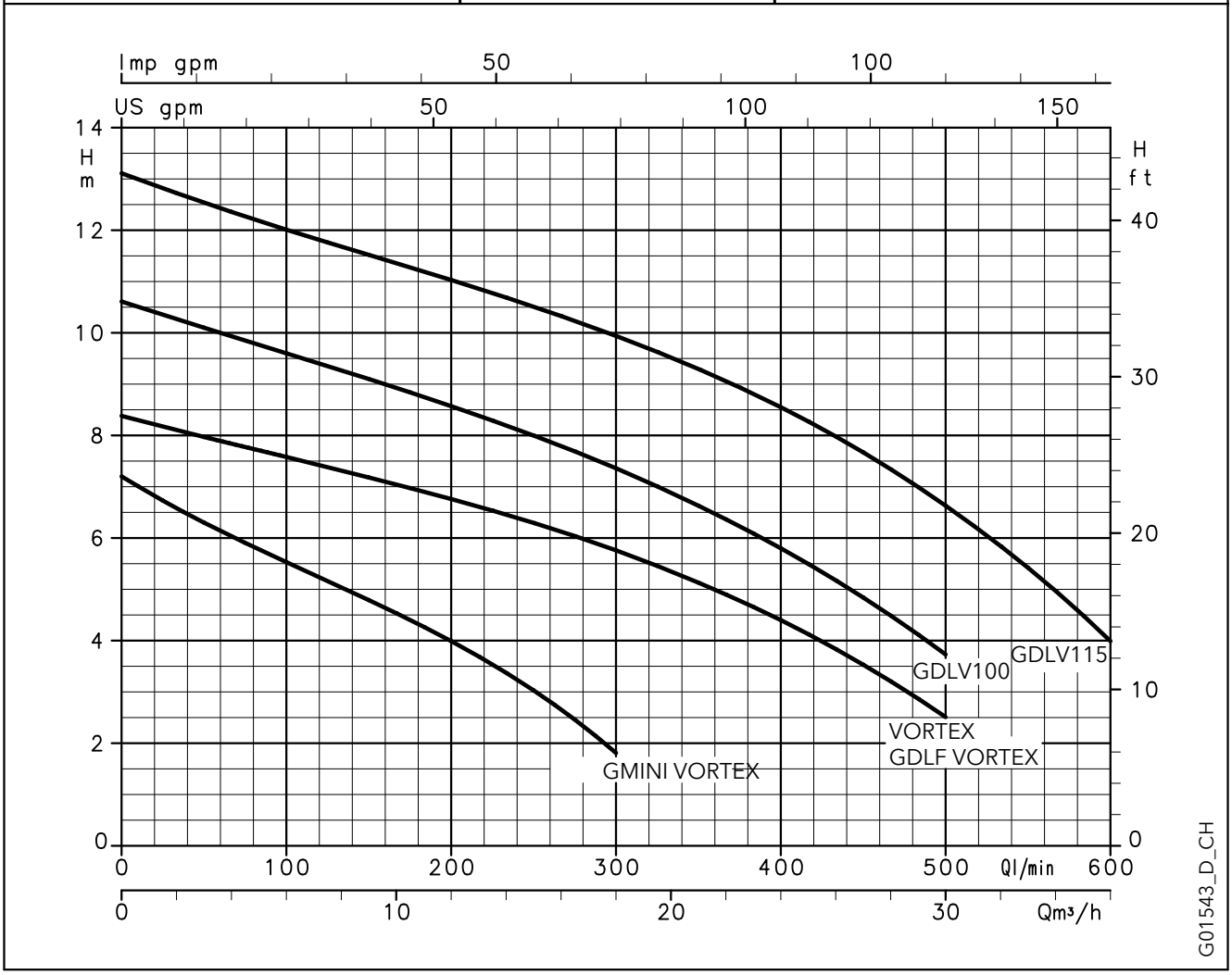

HYDRAULIC PERFORMANCE TABLE

PUMP TYPE	RATED POWER		Q = DELIVERY											
			l/min	0	50	100	150	200	250	300	350	400	450	500	600
			m³/h	0	3	6	9	12	15	18	21	24	27	30	36
	kW	HP	H = TOTAL HEAD METRES COLUMN OF WATER												
GMINIVX(M)	0,6	0,8	7,2	6,3	5,5	4,8	4,0	3,0	1,8					
GVORTEX-GDLF VORTEX	1,1	1,5	8,4	8,0	7,6	7,2	6,8	6,3	5,8	5,1	4,4	3,5	2,5	
GDLV(M) 100	1,1	1,5	10,6	10,1	9,6	9,1	8,6	8,0	7,4	6,6	5,8	4,8	3,7	
GDLV 115	1,5	2	13,1	12,5	12,0	11,5	11,0	10,5	9,9	9,3	8,5	7,7	6,6	4,0

These performances are valid for liquids with density ρ = 1,0 kg/dm³ and kinematic viscosity ν = 1 mm²/s.

gdlv-2p50-en_b_th

ELECTRICAL DATA TABLE

PUMP TYPE SINGLE-PHASE	ABSORBED POWER* kW	ABSORBED CURRENT* 220-240 V A	CAPACITOR µF / 450 V
GMINIVX M	1,05	4,82	25
-	-	-	-
GDLVM100	1,64	7,30	35
-	-	-	-

PUMP TYPE THREE-PHASE	ABSORBED POWER* kW	ABSORBED CURRENT* 220-240 V A	ABSORBED CURRENT* 380-415 V A
GMINIVX	1,10	-	2,36
GVORTEX-GDLF VORTEX	1,66	5,11	2,95
GDLV 100	1,65	5,63	3,25
GDLV 115	2,25	6,81	3,93

*Maximum values within operating range.

gdlv-2p50-en_b_te

GDL - VORTEX SERIES
DIMENSIONS AND WEIGHTS

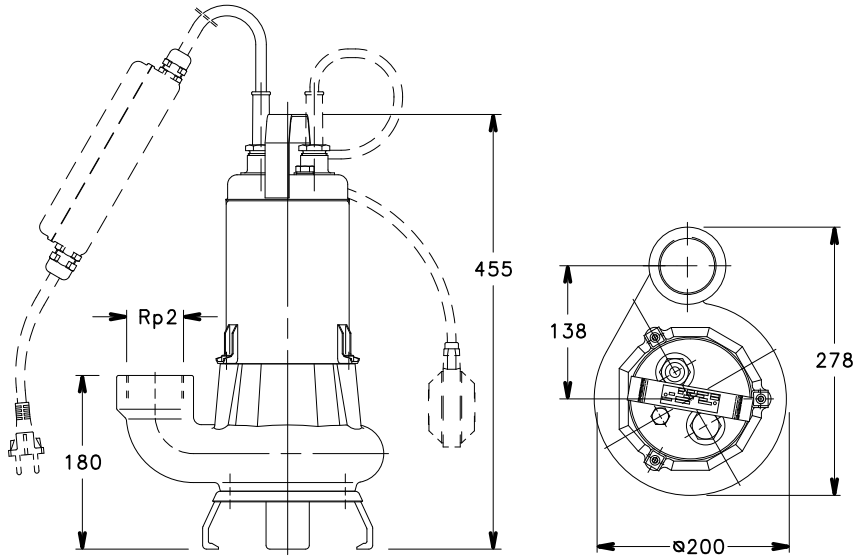

PUMP TYPE	WEIGHT kg
GDL80-GDLM80	19,5
GDL90-GDLM90	20
GDL105	21
GMINIVX (M)	19
GVORTEX	19

gdl-gvortex-2p50-en_a_td

01541_D_DD

GDLF SERIES
INSTALLATION WITH SD LOWERING DEVICE

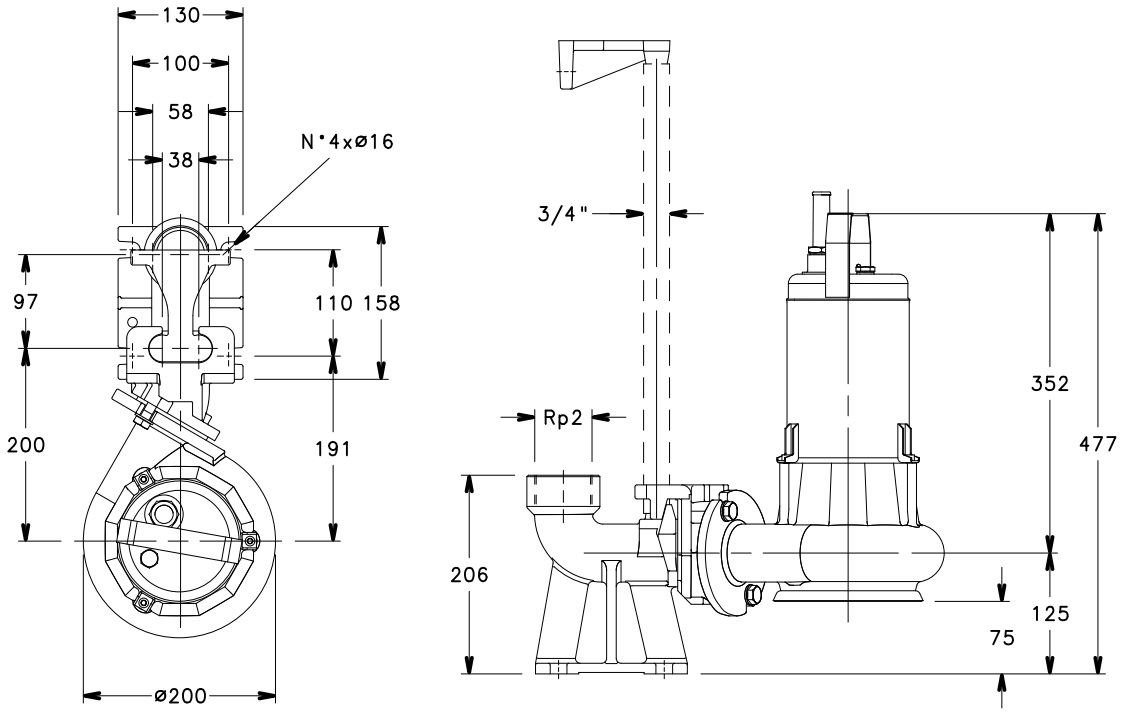

01547_B_DD

GDL-GDLV SERIES
DIMENSIONS AND WEIGHTS

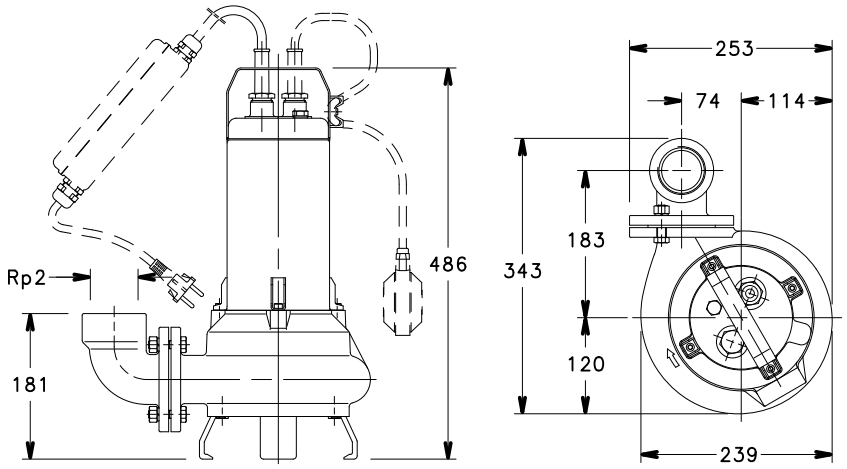

PUMP TYPE	WEIGHT kg
GDL109-GDLM109	27
GDL125 -	27
GDLV100-GDLVM100	27
GDLV115 -	27

gdl-gdlv-2p50-en_a_td

01562_D_DD

GDL-GDLV SERIES
INSTALLATION WITH SD LOWERING DEVICE

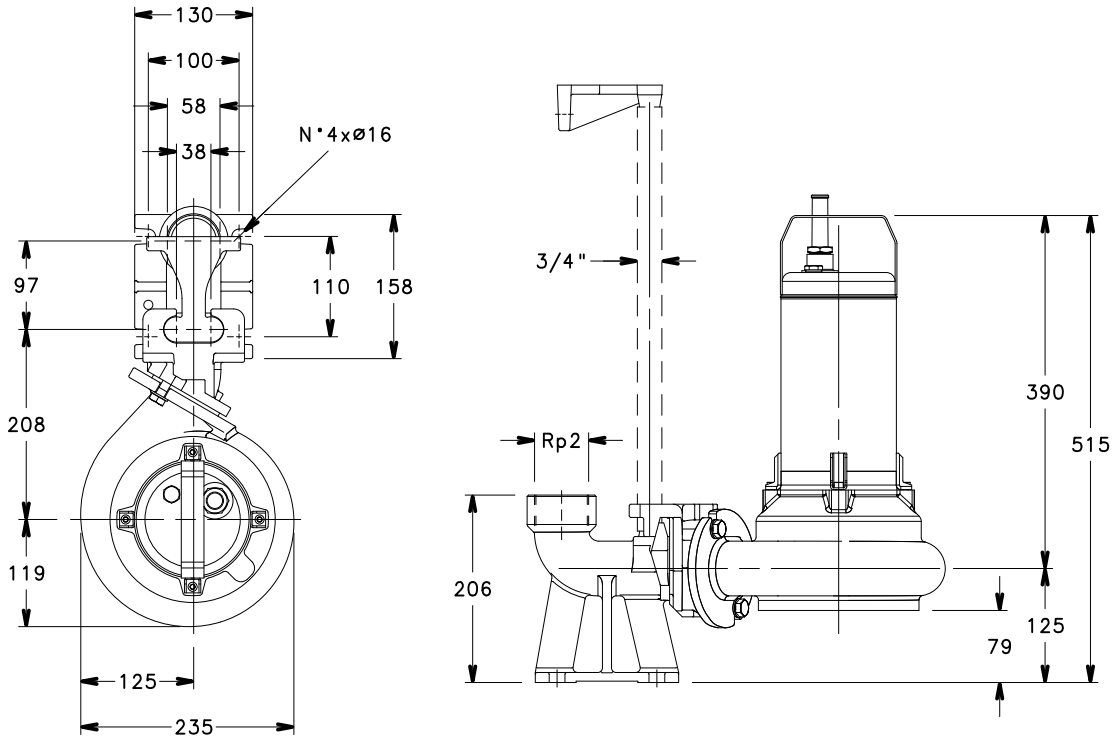

01567_D_DD

TECHNICAL APPENDIX

LEVEL REGULATORS

SMALL MODEL
(floating)

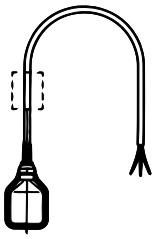

For single function (draining).
Cable lengths 1.5, 5, 10 m.
Counterweight available on request for versions with 5 and 10 m cable.

KEY MODEL
(floating)

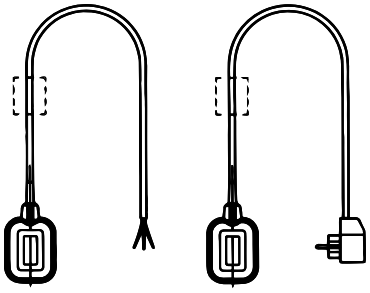

For dual function (draining/filling).
Cable lengths: 1.5, 5, 10, 20 m.
Counterweight available on request for versions with 5 and 10 m cable.
Version with plug and socket for single-phase pumps up to 1 kW.

RDN-10 MODEL
(tilting)

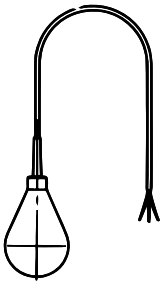

For solids-laden water.
Cable lengths:
10, 13, 15, 20, 30, 50 m.

BALL CHECK VALVES FOR WASTEWATER

No-clog, maximum reliability, low flow resistance.
Maximum operating pressure: 10 bar.
Maximum temperature: 85°C.
Horizontal and vertical operating position.

MODEL	DIMENSIONS (mm)			WEIGHT
	Ø BALL	L	H	kg
Rp 1 1/4	48	140	80	2
Rp 1 1/2	50	140	80	4
Rp 2	60	200	98	5,5
DN 65	95	230	148	12
DN 80	95	260	148	13
DN 100	120	300	182	18
DN 150	175	400	251	37,5
DN 200	240	500	333	70
DN 250	300	600	406	128

Valv-palla-en_a_td

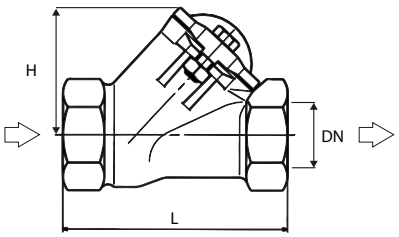

Rp 1 1/4 - 1 1/2 - 2 MODEL

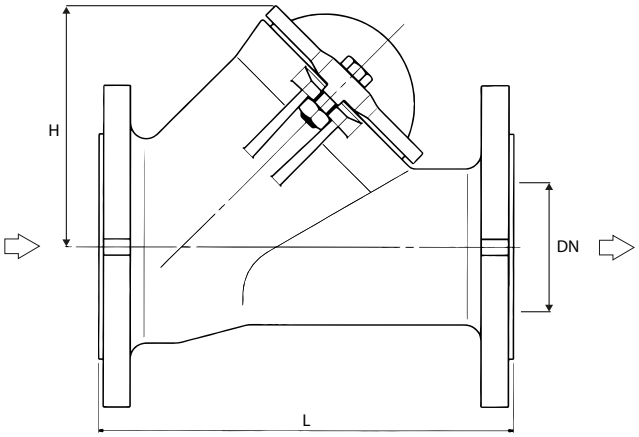

65 - 80 - 100 - 150 - 200 - 250 MODEL

EXAMPLE OF INSTALLATION OF SINGLE-PUMP SYSTEM

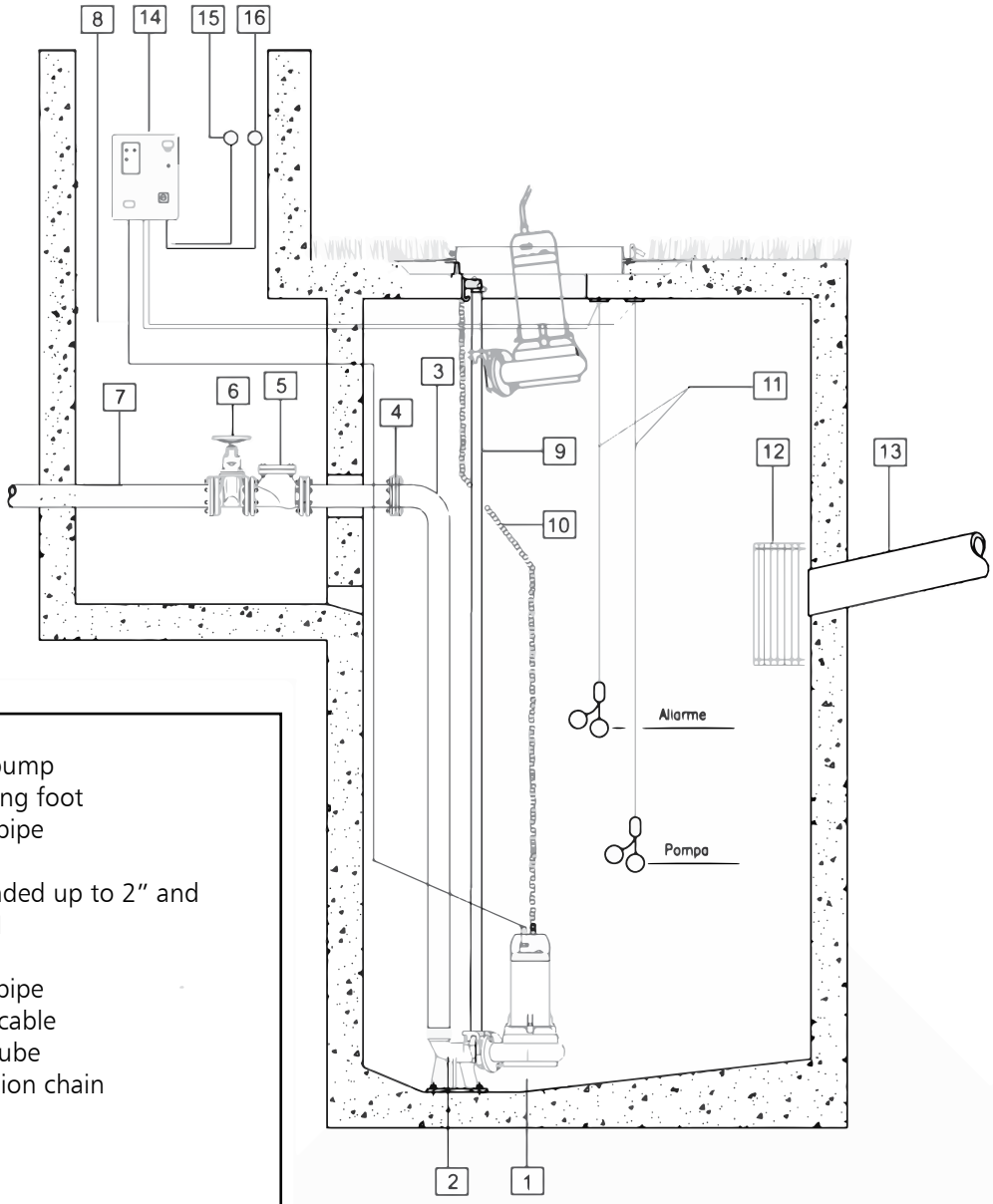

LEGEND

1- Submersible electric pump
2- Cast iron quick coupling foot
3- Polyethylene delivery pipe
4- Counterflange
5- Ball check valve, threaded up to 2" and flanged for higher DN
6- Gate valve
7- Polyethylene delivery pipe
8- Electric pump power cable
9- Stainless steel guide tube
10- Stainless steel extraction chain
11- Level floats
12- Inlet sluice gate
13- Inlet pipe
14- Electric panel
15- Alarm siren
16- Alarm light

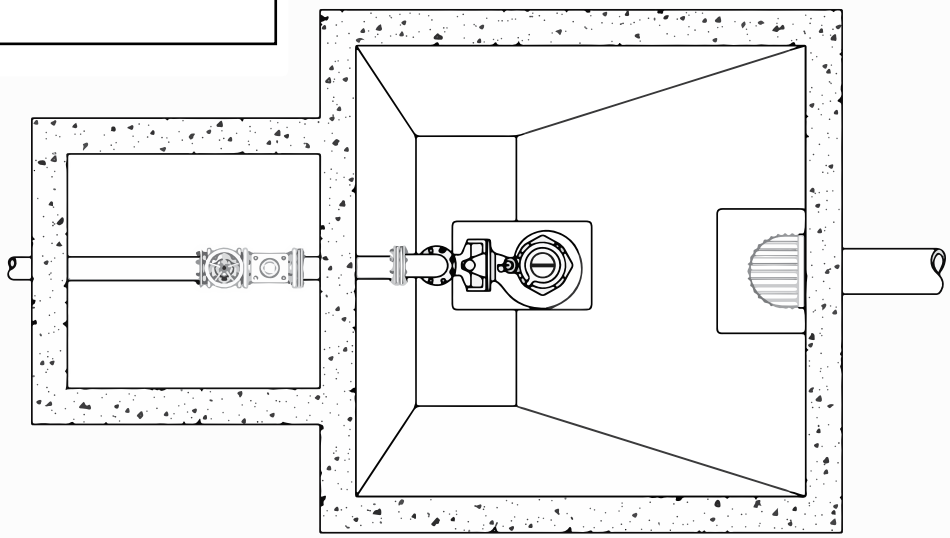

EXAMPLE OF INSTALLATION OF <u>TWO-PUMPS</u> SYSTEM WITH THREE LEVEL REGULATORS

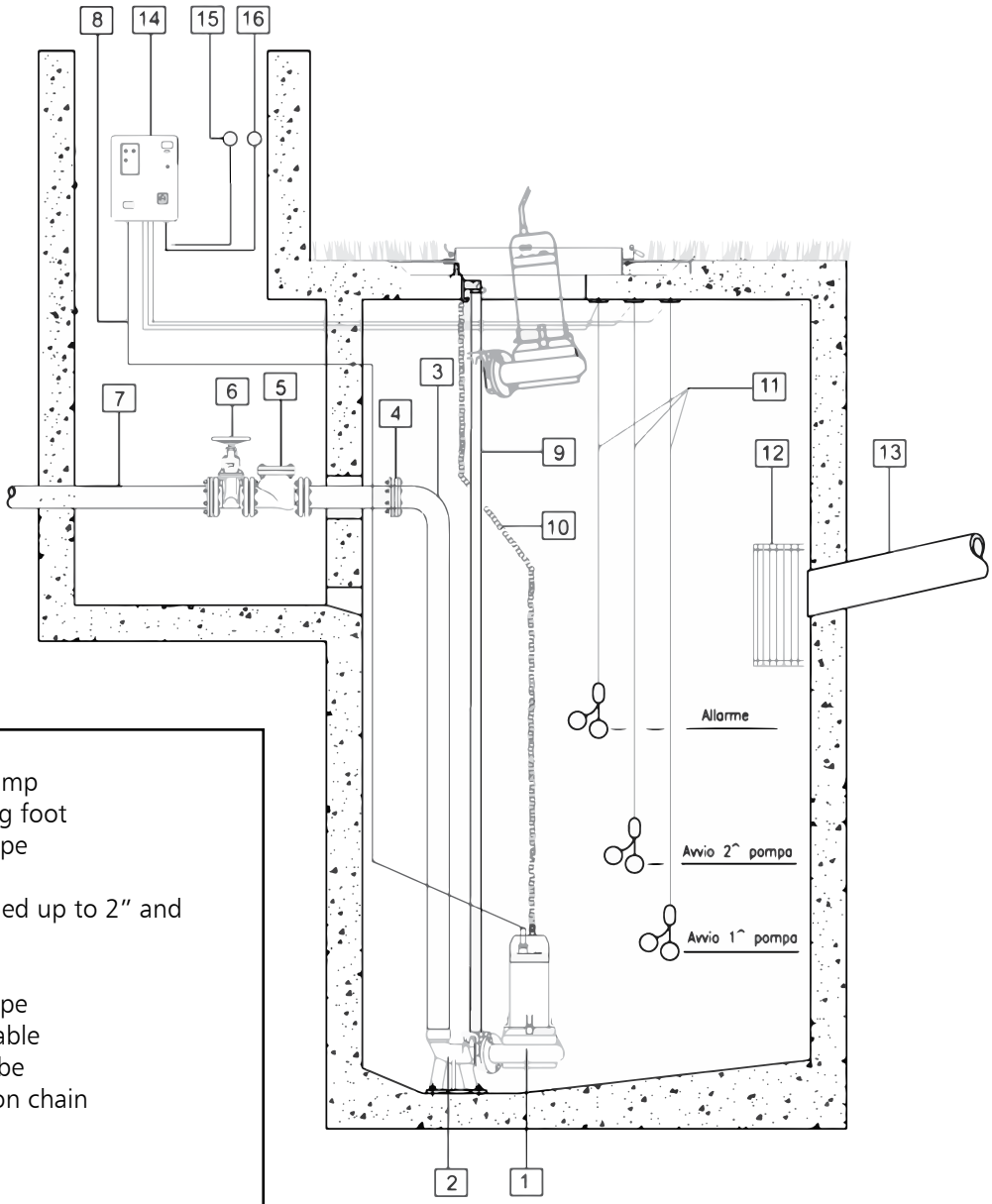

LEGEND

1- Submersible electric pump
2- Cast iron quick coupling foot
3- Polyethylene delivery pipe
4- Counterflange
5- Ball check valve, threaded up to 2" and flanged for higher DN
6- Gate valve
7- Polyethylene delivery pipe
8- Electric pump power cable
9- Stainless steel guide tube
10- Stainless steel extraction chain
11- Level floats
12- Inlet sluice gate
13- Inlet pipe
14- Electric panel
15- Alarm siren
16- Alarm light

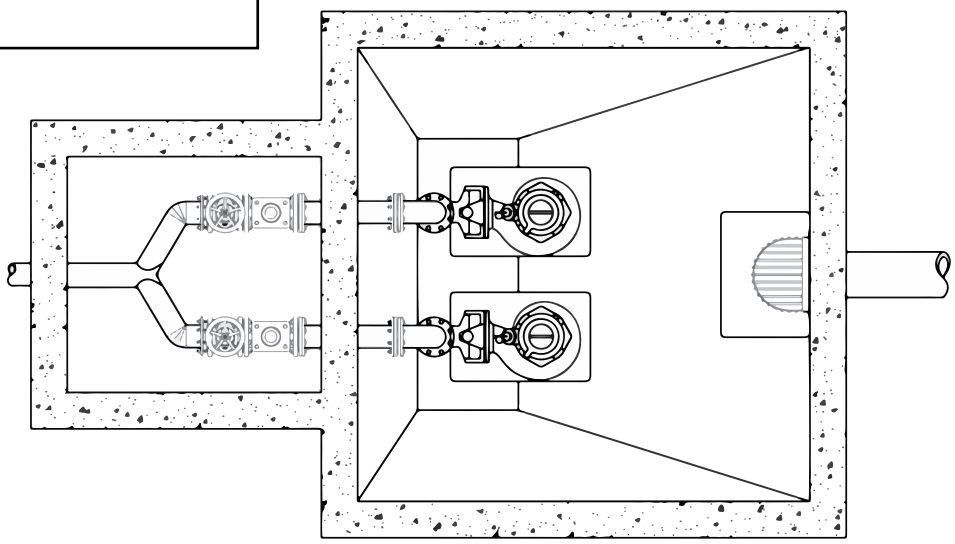

EXAMPLE OF INSTALLATION OF TWO-PUMPS SYSTEM WITH FOUR LEVEL REGULATORS

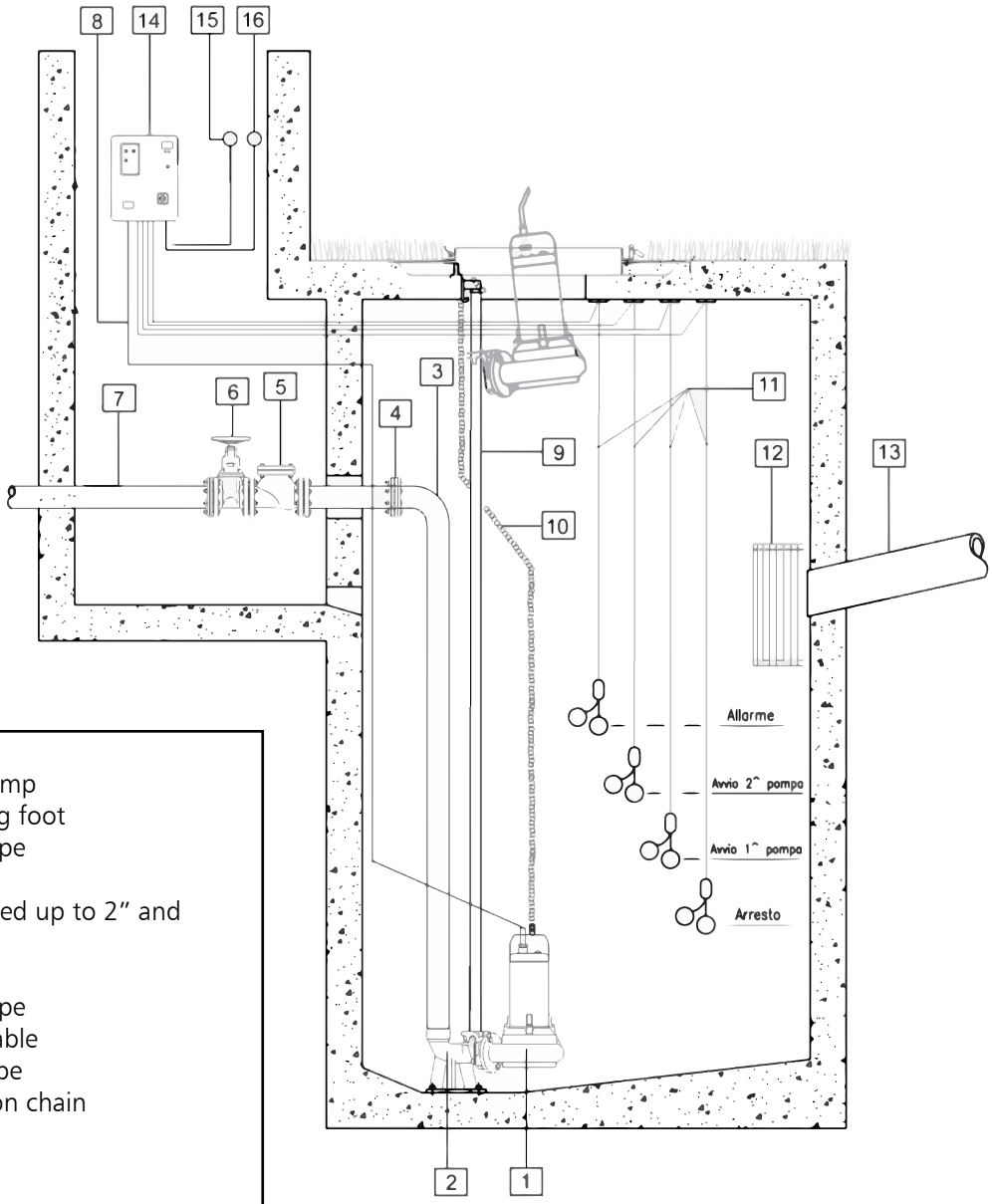

LEGEND

1- Submersible electric pump
2- Cast iron quick coupling foot
3- Polyethylene delivery pipe
4- Counterflange
5- Ball check valve, threaded up to 2" and flanged for higher DN
6- Gate valve
7- Polyethylene delivery pipe
8- Electric pump power cable
9- Stainless steel guide tube
10- Stainless steel extraction chain
11- Level floats
12- Inlet sluice gate
13- Inlet pipe
14- Electric panel
15- Alarm siren
16- Alarm light

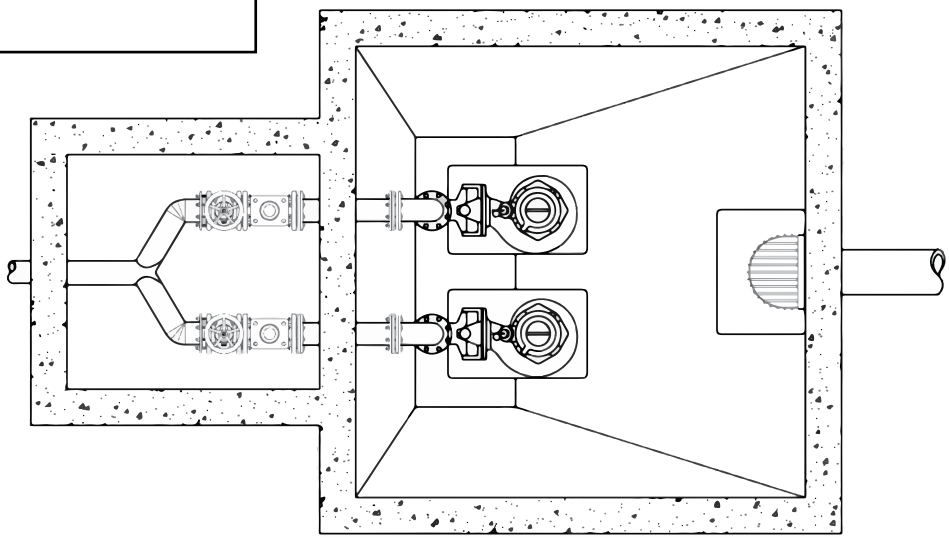

TABLE OF FLOW RESISTANCE IN 100 m OF STRAIGHT CAST IRON PIPELINE (HAZEN-WILLIAMS FORMULA C=100)

FLOW RATE			NOMINAL DIAMETER in mm and inches																
m^3/h	l/min		15 1/2"	20 3/4"	25 1"	32 1 1/4"	40 1 1/2"	50 2	65 2 1/2"	80 3"	100 4"	125 5"	150 6"	175 7"	200 8"	250 10"	300 12"	350 14"	400 16"
0,6	10	v	0,94	0,53	0,34	0,21	0,13												
		hr	16	3,94	1,33	0,40	0,13												
0,9	15	v	1,42	0,80	0,51	0,31	0,20												
		hr	33,9	8,35	2,82	0,85	0,29												
1,2	20	v	1,89	1,06	0,68	0,41	0,27	0,17											
		hr	57,7	14,21	4,79	1,44	0,49	0,16											
1,5	25	v	2,36	1,33	0,85	0,52	0,33	0,21											
		hr	87,2	21,5	7,24	2,18	0,73	0,25											
1,8	30	v	2,83	1,59	1,02	0,62	0,40	0,25											
		hr	122	30,1	10,1	3,05	1,03	0,35											
2,1	35	v	3,30	1,86	1,19	0,73	0,46	0,30											
		hr	162	40,0	13,5	4,06	1,37	0,46											
2,4	40	v		2,12	1,36	0,83	0,53	0,34	0,20										
		hr		51,2	17,3	5,19	1,75	0,59	0,16										
3	50	v		2,65	1,70	1,04	0,66	0,42	0,25										
		hr		77,4	26,1	7,85	2,65	0,89	0,25										
3,6	60	v		3,18	2,04	1,24	0,80	0,51	0,30										
		hr		108	36,6	11,0	3,71	1,25	0,35										
4,2	70	v		3,72	2,38	1,45	0,93	0,59	0,35										
		hr		144	48,7	14,6	4,93	1,66	0,46										
4,8	80	v		4,25	2,72	1,66	1,06	0,68	0,40										
		hr		185	62,3	18,7	6,32	2,13	0,59										
5,4	90	v			3,06	1,87	1,19	0,76	0,45	0,30									
		hr			77,5	23,3	7,85	2,65	0,74	0,27									
6	100	v			3,40	2,07	1,33	0,85	0,50	0,33									
		hr			94,1	28,3	9,54	3,22	0,90	0,33									
7,5	125	v			4,25	2,59	1,66	1,06	0,63	0,41									
		hr			142	42,8	14,4	4,86	1,36	0,49									
9	150	v				3,11	1,99	1,27	0,75	0,50	0,32								
		hr				59,9	20,2	6,82	1,90	0,69	0,23								
10,5	175	v				3,63	2,32	1,49	0,88	0,58	0,37								
		hr				79,7	26,9	9,07	2,53	0,92	0,31								
12	200	v				4,15	2,65	1,70	1,01	0,66	0,42								
		hr				102	34,4	11,6	3,23	1,18	0,40								
15	250	v				5,18	3,32	2,12	1,26	0,83	0,53	0,34							
		hr				154	52,0	17,5	4,89	1,78	0,60	0,20							
18	300	v					3,98	2,55	1,51	1,00	0,64	0,41							
		hr					72,8	24,6	6,85	2,49	0,84	0,28							
24	400	v					5,31	3,40	2,01	1,33	0,85	0,54	0,38						
		hr					124	41,8	11,66	4,24	1,43	0,48	0,20						
30	500	v					6,63	4,25	2,51	1,66	1,06	0,68	0,47						
		hr					187	63,2	17,6	6,41	2,16	0,73	0,30						
36	600	v						5,10	3,02	1,99	1,27	0,82	0,57	0,42					
		hr						88,6	24,7	8,98	3,03	1,02	0,42	0,20					
42	700	v						5,94	3,52	2,32	1,49	0,95	0,66	0,49					
		hr						118	32,8	11,9	4,03	1,36	0,56	0,26					
48	800	v						6,79	4,02	2,65	1,70	1,09	0,75	0,55					
		hr						151	42,0	15,3	5,16	1,74	0,72	0,34					
54	900	v						7,64	4,52	2,99	1,91	1,22	0,85	0,62					
		hr						188	52,3	19,0	6,41	2,16	0,89	0,42					
60	1000	v							5,03	3,32	2,12	1,36	0,94	0,69	0,53				
		hr							63,5	23,1	7,79	2,63	1,08	0,51	0,27				
75	1250	v							6,28	4,15	2,65	1,70	1,18	0,87	0,66				
		hr							96,0	34,9	11,8	3,97	1,63	0,77	0,40				
90	1500	v							7,54	4,98	3,18	2,04	1,42	1,04	0,80				
		hr							134	48,9	16,5	5,57	2,29	1,08	0,56				
105	1750	v							8,79	5,81	3,72	2,38	1,65	1,21	0,93				
		hr							179	65,1	21,9	7,40	3,05	1,44	0,75				
120	2000	v								6,63	4,25	2,72	1,89	1,39	1,06	0,68			
		hr								83,3	28,1	9,48	3,90	1,84	0,96	0,32			
150	2500	v								8,29	5,31	3,40	2,36	1,73	1,33	0,85			
		hr								126	42,5	14,3	5,89	2,78	1,45	0,49			
180	3000	v									6,37	4,08	2,83	2,08	1,59	1,02	0,71		
		hr									59,5	20,1	8,26	3,90	2,03	0,69	0,28		
210	3500	v									7,43	4,76	3,30	2,43	1,86	1,19	0,83		
		hr									79,1	26,7	11,0	5,18	2,71	0,91	0,38		
240	4000	v									8,49	5,44	3,77	2,77	2,12	1,36	0,94		
		hr									101	34,2	14,1	6,64	3,46	1,17	0,48		
300	5000	v										6,79	4,72	3,47	2,65	1,70	1,18		
		hr										51,6	21,2	10,0	5,23	1,77	0,73		
360	6000	v										8,15	5,66	4,16	3,18	2,04	1,42		
		hr										72,3	29,8	14,1	7,33	2,47	1,02		
420	7000	v											6,61	4,85	3,72	2,38	1,65	1,21	
		hr											39,6	18,7	9,75	3,29	1,35	0,64	
480	8000	v											7,55	5,55	4,25	2,72	1,89	1,39	
		hr											50,7	23,9	12,49	4,21	1,73	0,82	
540	9000	v											8,49	6,24	4,78	3,06	2,12	1,56	1,19
		hr											63,0	29,8	15,5	5,24	2,16	1,02	0,53
600	10000	v												6,93	5,31	3,40	2,36	1,73	1,33
		hr												36,2	18,9	6,36	2,62	1,24	0,65

The hr values must be multiplied by:

0,71 for galvanized or painted steel pipes

0,54 for stainless steel or copper pipes

0,47 for PVC or PE pipes

hr = flow resistance for 100 m of straight pipeline (m)

V = water speed (m/s)

G-at-pct-en_b_th

FLOW RESISTANCE IN BENDS, VALVES AND GATES IN cm OF COLUMN OF WATER

WATER SPEED	SHARP BENDS					SMOOTH BENDS					STANDARD GATE VALVES	FOOT VALVES	CHECK VALVES
m/sec	a = 30°	a = 40°	a = 60°	a = 80°	a = 90°	$\frac{d}{R}=0,4$	$\frac{d}{R}=0,6$	$\frac{d}{R}=0,8$	$\frac{d}{R}=1$	$\frac{d}{R}=1,5$			
0,1	0,03	0,04	0,05	0,07	0,08	0,007	0,008	0,01	0,0155	0,027	0,03	30	30
0,15	0,06	0,07	0,1	0,14	0,17	0,016	0,019	0,024	0,033	0,06	0,033	31	31
0,2	0,11	0,13	0,18	0,26	0,31	0,028	0,033	0,04	0,058	0,11	0,058	31	31
0,25	0,17	0,21	0,28	0,4	0,48	0,044	0,052	0,063	0,091	0,17	0,09	31	31
0,3	0,25	0,3	0,41	0,6	0,7	0,063	0,074	0,09	0,13	0,25	0,13	31	31
0,35	0,33	0,4	0,54	0,8	0,93	0,085	0,1	0,12	0,18	0,33	0,18	31	31
0,4	0,43	0,52	0,71	1	1,2	0,11	0,13	0,16	0,23	0,43	0,23	32	31
0,5	0,67	0,81	1,1	1,6	1,9	0,18	0,21	0,26	0,37	0,67	0,37	33	32
0,6	0,97	1,2	1,6	2,3	2,8	0,25	0,29	0,36	0,52	0,97	0,52	34	32
0,7	1,35	1,65	2,2	3,2	3,9	0,34	0,4	0,48	0,7	1,35	0,7	35	32
0,8	1,7	2,1	2,8	4	4,8	0,45	0,53	0,64	0,93	1,7	0,95	36	33
0,9	2,2	2,7	3,6	5,2	6,2	0,57	0,67	0,82	1,18	2,2	1,2	37	34
1	2,7	3,3	4,5	6,4	7,6	0,7	0,82	1	1,45	2,7	1,45	38	35
1,5	6	7,3	10	14	17	1,6	1,9	2,3	3,3	6	3,3	47	40
2	11	14	18	26	31	2,8	3,3	4	5,8	11	5,8	61	48
2,5	17	21	28	40	48	4,4	5,2	6,3	9,1	17	9,1	78	58
3	25	30	41	60	70	6,3	7,4	9	13	25	13	100	71
3,5	33	40	55	78	93	8,5	10	12	18	33	18	123	85
4	43	52	70	100	120	11	13	16	23	42	23	150	100
4,5	55	67	90	130	160	14	21	26	37	55	37	190	120
5	67	82	110	160	190	18	29	36	52	67	52	220	140

1) Flow resistance in bends is due to the contraction of th eliquid threads resulting from the change of direction: the development of th ebends must therefore be included in the lenght of the pipeline.

2) Flow resistance in valves and gates was determined on the basis of practical tests.

perdite-en_a_ot

VOLUMETRIC CAPACITY

Litres per minute l/min	Cubic metres per hour m^3/h	Cubic feet per hour ft^3/h	Cubic feet per minute ft^3/min	Imperial gallon per minute Imp. gal/min	U.S. gallon per minute US gal/min
1,0000	0,0600	2,1189	0,0353	0,2200	0,2642
16,6667	**1,0000**	35,3147	0,5886	3,6662	4,4029
0,4719	0,0283	**1,0000**	0,0167	0,1038	0,1247
28,3168	1,6990	60,0000	**1,0000**	6,2288	7,4805
4,5461	0,2728	9,6326	0,1605	**1,0000**	1,2009
3,7854	0,2271	8,0208	0,1337	0,8327	**1,0000**

PRESSURE AND HEAD

Newton per square metre N/m^2	kilo Pascal kPa	bar bar	Pound force per square inch psi	Metre of water m H_2O	Millimetre of mercury mm Hg
1,0000	0,0010	1×10^{-5}	$1,45 \times 10^{-4}$	$1,02 \times 10^{-4}$	0,0075
1 000,0000	**1,0000**	0,0100	0,1450	0,1020	7,5006
1×10^{5}	100,0000	**1,0000**	14,5038	10,1972	750,0638
6 894,7570	6,8948	0,0689	**1,0000**	0,7031	51,7151
9 806,6500	9,8067	0,0981	1,4223	**1,0000**	73,5561
133,3220	0,1333	0,0013	0,0193	0,0136	**1,0000**

LENGTH

Millimetre mm	Centimetre cm	Metre m	Inch in	Foot ft	Yard yd
1,0000	0,1000	0,0010	0,0394	0,0033	0,0011
10,0000	**1,0000**	0,0100	0,3937	0,0328	0,0109
1 000,0000	100,0000	**1,0000**	39,3701	3,2808	1,0936
25,4000	2,5400	0,0254	**1,0000**	0,0833	0,0278
304,8000	30,4800	0,3048	12,0000	**1,0000**	0,3333
914,4000	91,4400	0,9144	36,0000	3,0000	**1,0000**

VOLUME

Cubic metre m^3	Litre L	Millilitre ml	Imperial gallon imp. gal.	U.S. gallon US gal.	Cubic foot ft^3
1,0000	1 000,0000	1×10^{6}	219,9694	264,1720	35,3147
0,0010	**1,0000**	1 000,0000	0,2200	0,2642	0,0353
1×10^{-6}	0,0010	**1,0000**	$2,2 \times 10^{-4}$	$2,642 \times 10^{-4}$	$3,53 \times 10^{-5}$
0,0045	4,5461	4 546,0870	**1,0000**	1,2009	0,1605
0,0038	3,7854	3 785,4120	0,8327	**1,0000**	0,1337
0,0283	28,3168	28 316,8466	6,2288	7,4805	**1,0000**

TEMPERATURE

Water	Kelvin K	Celsius °C	Fahrenheit °F	
icing	273,1500	0,0000	32,0000	$°F = °C \times \frac{9}{5} + 32$
boiling	373,1500	100,0000	212,0000	$°C = (°F - 32) \times \frac{5}{9}$

G-at_pp-en_b_sc

FURTHER PRODUCT SELECTION AND DOCUMENTATION
Xylect™

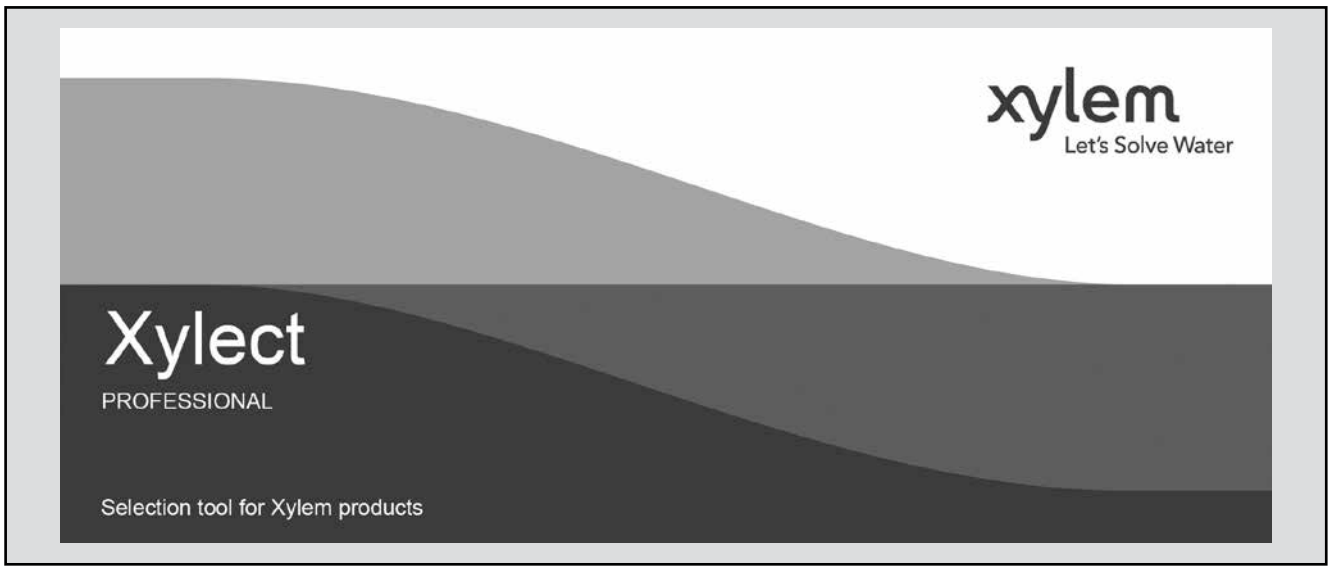

Xylect™ is pump solution selection software with an extensive online database of product information across the entire Goulds range of pumps and related products, with multiple search options and helpful project management facilities. The system holds up-to-date product information on thousands of products and accessories.

The possibility to search by applications and the detailed information output given makes it easy to make the optimal selection without having detailed knowledge about the Goulds products.

The search can be made by:

- Application
- Product type
- Duty point

Xylect™ gives a detailed output:

- List with search results
- Performance curves (flow, head, power, efficiency, NPSH)
- Motor data
- Dimensional drawings
- Options
- Data sheet printouts
- Document downloads incl dxf files

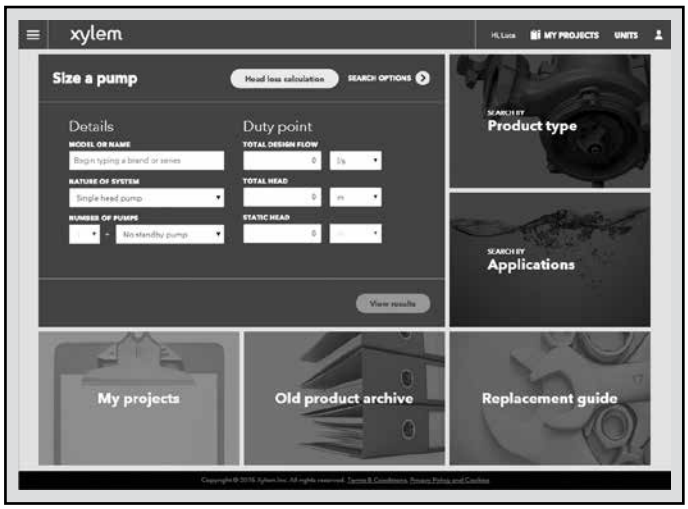

The search by application guides users not familiar with the product range to the right choice.

FURTHER PRODUCT SELECTION AND DOCUMENTATION
Xylect™

The detailed output makes it easy to select the optimal pump from the given alternatives.

The best way to work with Xylect™ is to create a personal account. This makes it possible to:

- Set own standard units
- Create and save projects
- Share projects with other Xylect™ users

Every registered user has a proper space, where all projects are saved.

For more information about Xylect™ please contact our sales network or visit www.xylect.com.

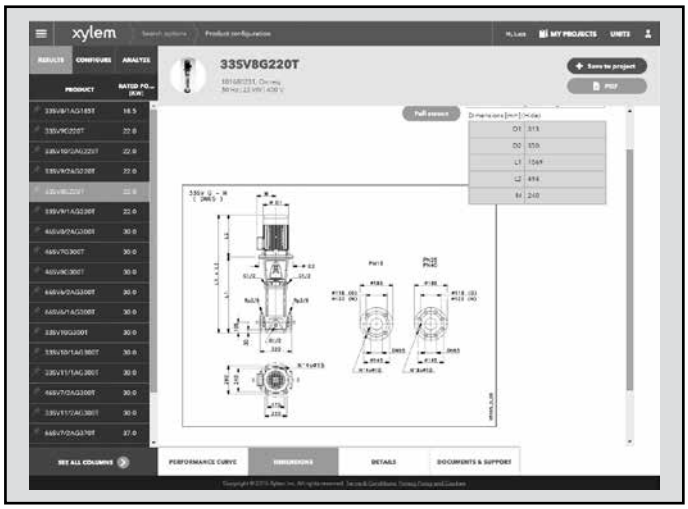

Dimensional drawings appear on the screen and can be downloaded in dxf format.

Xylem |ˈzīləm|

1) The tissue in plants that brings water upward from the roots;
2) a leading global water technology company.

We're a global team unified in a common purpose: creating advanced technology solutions to the world's water challenges. Developing new technologies that will improve the way water is used, conserved, and re-used in the future is central to our work. Our products and services move, treat, analyze, monitor and return water to the environment, in public utility, industrial, residential and commercial building services, and agricultural settings. With its October 2016 acquisition of Sensus, Xylem added smart metering, network technologies and advanced data analytics for water, gas and electric utilities to its portfolio of solutions. In more than 150 countries, we have strong, long-standing relationships with customers who know us for our powerful combination of leading product brands and applications expertise with a strong focus on developing comprehensive, sustainable solutions.

For more information on how Xylem can help you, go to www.xylem.com.

Sales office:
Xylem Water Solutions
MidGDLe East Region FZCO
Plot S20120, Jebel Ali Free Zone South
P.O. Box 262678, Dubai
United Arab Emirates
Phone: +971 4 806 1103
Fax: +971 4 880 6045
Email: info.uae@xyleminc.com
midGDLeeast.xylemappliedwater.com/gwt

For information and technical support:
Xylem Service Italia Srl
Via Dottor Vittorio Lombardi 14
36075 - Montecchio Maggiore (VI)
Italy
Tel. (+39) 0444 707111
Fax (+39) 0444 491043

We reserve the right to make modification without prior notice.
Xylem is a trademark of Xylem Inc. or one of its subsidiaries. Goulds is a registered trademark of Goulds Pumps, Inc. and is used under license.
© 2017 Xylem, Inc.