Bell & Gossett
a xylem brand

INSTRUCTION MANUAL
S14141B

70X Multiple Pump Pressure Booster Systems

Installation, Operation and Service Instructions

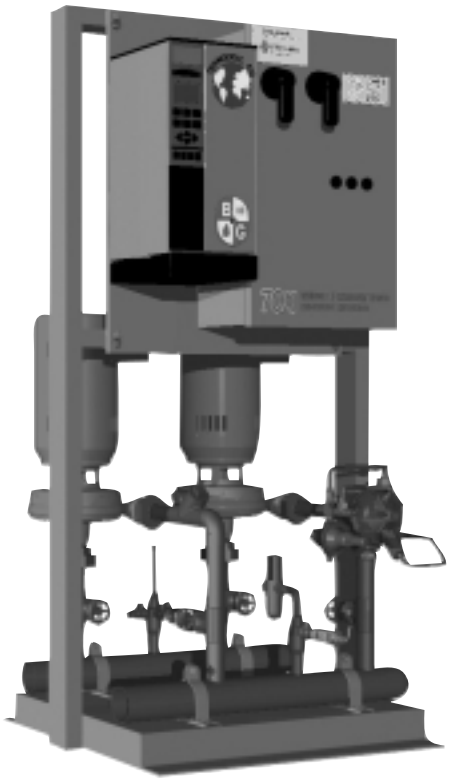

INSTALLER: PLEASE LEAVE THIS MANUAL FOR THE OWNER'S USE.

DESCRIPTION

A Bell & Gossett Packaged Pressure Booster System is factory assembled, tested and shipped as a complete modular unit. Each Pressure Booster System is tested to internal quality standards.

The information contained in this manual is intended to assist operating personnel by providing information on the characteristics of the purchased equipment. It does not relieve the user of the responsibility to adhere to local codes and ordinances and the use of accepted practices in the installation, operation and maintenance of this equipment. Further information pertaining to the installation, operation, and maintenance can be found in the I.O.M.s for the specific equipment provided.

OPERATIONAL LIMITS

See unit nameplate for pump capacity, boost, full load current draw, and operating voltage. The pump discharge pressure must not exceed 175 PSI unless specifically designed.

SAFETY INSTRUCTIONS

This safety alert symbol will be used in this manual and on the Safety Instruction decal to draw attention to safety related instructions. When used, the safety alert symbol means **ATTENTION! BECOME ALERT! YOUR SAFETY IS INVOLVED! FAILURE TO FOLLOW THE INSTRUCTION MAY RESULT IN A SAFETY HAZARD!**

UNIT IDENTIFICATION

The unit nameplate gives identification and rating information as identified in Figure 1.

Records for this unit are kept by the order number (Q_____) and it must therefore be used with all correspondence and spare parts orders.

PRESSURE BOOSTER SYSTEM

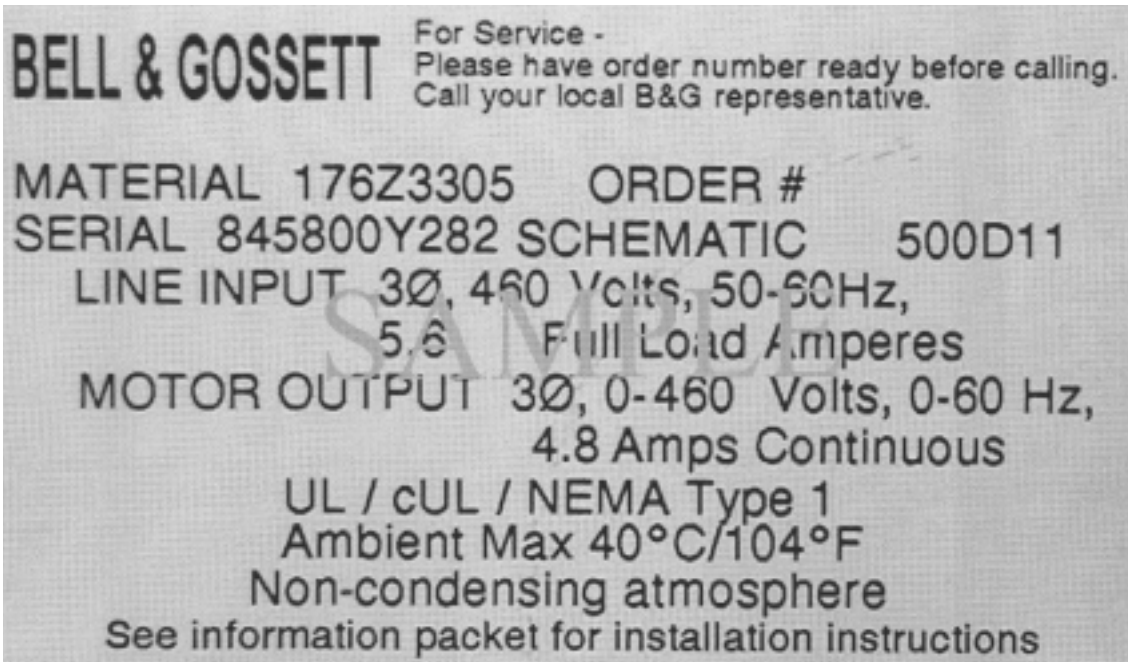

FIGURE 1 - Technologic 500X Control Panel Nameplate

PREFACE

The 70X modular variable speed pressure booster system is designed to maintain a constant discharge pressure while minimizing power consumption by combining a variable speed lead pump with one or two constant speed lag pumps. This system creates an efficient and practical solution to a building's low demand water usage profile. A typical building's water demand varies throughout the course of a day and often a single pump is capable of meeting the demand for more than half of the day. The 70X controller manages pump operation to match the wide range of pressure boosting system conditions. The pump controller uses a combination of kW, pressure and speed to calculate the most efficient points to stage on and off pumps for operation.

Power consumption is minimized by varying the speed of the lead pump to satisfy a varying system demand. As the system demand exceeds the capacity of the lead pump, a constant speed lag pump is staged on. The constant speed lag pump operates at full capacity while the lead variable speed pump adjusts its speed to supplement the system requirement. When speed demand decreases the lead pump slows down. While monitoring system pressure, pump speed and power consumption, the constant speed lag pump is staged off at an optimal point and the variable speed pump takes over.

TABLE OF CONTENTS

70X Multiple Pump Pressure Booster Systems

SECTION 1 - GENERAL

1.1 PURPOSE OF MANUAL

1.1.1 This manual is furnished to acquaint the user with some of the practical ways to install, operate, and maintain this unit. Read it carefully before doing any work on your unit and keep it handy for future reference. This manual provides general instructions for installation, commissioning and operation to ensure optimal performance and reliability.

1.1.2 Equipment cannot operate well without proper care. To keep this unit at top efficiency, follow the recommended installation and servicing procedures outlined in this manual.

1.1.3 The control panel installed on the pressure booster system shall have a safety instruction decal (part #S11550 shown below). If the decal is missing or illegible contact your local B&G representative for a replacement.

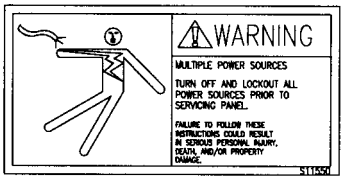

1.2 SAFETY REQUIREMENTS

WARNING: Make sure the area surrounding the unit is safe. Be aware of any hazardous conditions that can exist. Always wear protective glasses and protective shoes when working with the unit. Do not wear loose fitting or torn clothing. Remove all jewelry when working.

FAILURE TO FOLLOW THESE INSTRUCTIONS COULD RESULT IN SERIOUS PERSONAL INJURY, DEATH, AND/OR PROPERTY DAMAGE.

1.2.1 Motor must have a properly sized starter with properly sized overload block to provide over load and undervoltage protection. Ground fault protection should be sized properly.

1.2.2 Refer to the motor manufacturer's I.O.M. (Installation, Operation & Maintenance manual) for specific installation information.

1.2.3 Even when the motor is stopped, it should be considered "alive" as long as its controller is energized. Keep hands away from the output shaft until the motor has completely stopped and power is disconnected from the pump controller.

WARNING: Motor can start automatically. Keep hands away from output shaft until motor is completely stopped and input power is removed from the motor control panel. Lockout main power switch while working near the motor shaft.

FAILURE TO FOLLOW THESE INSTRUCTIONS COULD RESULT IN SERIOUS PERSONAL INJURY, DEATH, AND/OR PROPERTY DAMAGE.

1.2.4 Motor control equipment and electronic controls are connected to hazardous line volt ages. When servicing electronic controls, there will be exposed components at or above line potential. Extreme care should be taken to protect against shock. Stand on an insulating pad and make it a habit to use only one hand when checking components. Always use accurate test meters when check ing electrical components. Always work with another person in case of an emergency. Disconnect power when performing maintenance. Be sure equipment is properly grounded. Wear safety glasses whenever working on electronic control or rotating equipment.

DANGER: Troubleshooting live control panels exposes personnel to hazardous voltages. Electrical troubleshooting must only be done by a qualified electrician.

FAILURE TO FOLLOW THESE INSTRUCTIONS COULD RESULT IN SERIOUS PERSONAL INJURY, DEATH, AND/OR PROPERTY DAMAGE.

1.3 HANDLING

1.3.1 Care should be taken to prevent damage due to dropping or jolting when moving the unit. Inspect the unit thoroughly for damage upon receipt. Transportation damage should be brought to the carrier's attention immediately. Ensure that sensing lines are free of crimps and kinks.

1.3.2 The unit should be unloaded and handled by qualified personnel. The unit is top heavy due to the position of the motors. Use the motor eyebolts to stabilize the unit while lifting to prevent overturning. Do not use the motor eyebolts to lift.

WARNING: Falling Objects Hazard. Eyebolts or lifting lugs, if provided, are for lifting only the components to which they are attached.

FAILURE TO FOLLOW THESE INSTRUCTIONS COULD RESULT IN SERIOUS PERSONAL INJURY, DEATH, AND/OR PROPERTY DAMAGE.

1.4 STORAGE

1.4.1 For periods of storage, the unit should be covered to prevent corrosion and contamination from dirt. It should be stored in a clean, dry location to prevent condensation as well as protected from freezing. After storage, again check that it is dry before applying power. Specific component storage instructions must be followed in accordance with the respective equipment manufacturer's recommendations.

CAUTION: Extreme temperatures are to be avoided. (Below 32ºF and above 110ºF).

FAILURE TO FOLLOW THESE INSTRUCTIONS COULD RESULT IN PROPERTY DAMAGE AND/OR MODERATE PERSONAL INJURY.

1.5 GROUND CONNECTIONS

1.5.1 A grounding terminal is provided for a dedicated ground wire connection. All provisions of the National Electrical Code and local codes must be followed.

WARNING: Conduit grounds are not adequate. A separate ground wire must be attached to the ground lug provided in the enclosure to avoid potential safety hazards.

FAILURE TO FOLLOW THESE INSTRUCTIONS COULD RESULT IN SERIOUS PERSONAL INJURY, DEATH, AND/OR PROPERTY DAMAGE.

1.6 POWER WIRING

1.6.1 Power wire types and sizes must be selected based upon conformance with the National Electrical Code and all local codes and restrictions. In addition, only copper (Cu) wire rated for 75°C (minimum) may be used for the power connections. Refer to the input current as listed on the nameplate on the enclosure door when sizing wire.

1.7 FIELD CONNECTION DIAGRAMS

1.7.1 Actual equipment manufacturers/models installed are system specific. Refer to specific manufacturers Installation, Operation & Maintenance Manuals for details unique to each component. The following instruction manual categories are supplied with the system (if applicable):
Pump
Technologic 500X Pump Controller
(IOM part #176U7761)
Thermal Relief Valve
PRV
Check Valve

1.7.2 The following field connection diagrams should be reviewed prior to unit installation and operation.

Drawing #	Description
Job Specific Print(s)	Wiring Diagram
Job Specific Print(s)	Dimensional Drawing

SECTION 2 - INSTALLATION

2.1 LOCATION

2.1.1 Locate the pumping system in a clean, well ventilated and properly drained location. It is recommended that the location selected facilitates ease of inspection, maintenance and service. Outside installations require protection from freezing.

CAUTION: Extreme temperatures are to be avoided (below 32°F and above 110°F).

FAILURE TO FOLLOW THESE INSTRUCTIONS COULD RESULT IN PROPERTY DAMAGE AND/OR MODERATE PERSONAL INJURY.

DANGER: Heavy load, may drop if not lifted properly. Do not lift the entire unit by component eyebolts.

FAILURE TO FOLLOW THESE INSTRUCTIONS WILL RESULT IN SERIOUS PERSONAL INJURY, DEATH, AND/OR PROPERTY DAMAGE.

2.2 FOUNDATION

2.2.1 This unit is built to give you years of service; install it properly and provide a suitable foundation. A base of concrete weighing 2-1/2 times the weight of the unit is recommended. (Check the shipping ticket for unit weight.) Tie the concrete pad in with the finished floor. Foundation bolts of proper size and pipe sleeve should be set in concrete. The pipe sleeve will allow some flexibility in bolt alignment to match the holes in the base plate. Allow sufficient bolt length for grout, shims, base plate, nuts and washers.

2.3 LEVELING

2.3.1 Place the unit on its concrete foundation, supporting it with steel wedges or shims totaling 1" in thickness. These wedges or shims should be put on both sides of each anchor bolt to provide a means of leveling the base. After leveling is complete, evenly and firmly tighten the foundation nuts. Do not fully tighten the bolts until after grouting.

2.4 GROUTING

2.4.1 After the frame has been leveled and securely bolted to the pad, a good grade of grout should be installed beneath the base. A suggested mixture for grout is: one part Portland Cement and two or three parts plain, sharp sand mixed with water until it will pour easily. Commercial grout mixtures with suspended iron particles are available. Wet the concrete base before pouring grout. Build a strong form around the foundation to contain grout. Allow the grout to flow around wedges & shims and beneath the entire length of the base flange. Allow the grout to set, usually 48 hours after pouring, before fully tightening the foundation bolts.

2.5 PIPING CONNECTIONS

DANGER: The heating of water and other fluids causes volumetric expansion. The associated forces may cause failure of system components and releases of high temperature fluids. This will be prevented by installing properly sized and located pressure relief valves and compression tanks.

FAILURE TO FOLLOW THESE INSTRUCTIONS CAN RESULT IN SERIOUS PROPERTY DAMAGE AND SERIOUS PERSONAL INJURY OR DEATH.

2.5.1 **Important.** Do not install and operate a Bell & Gossett Pressure Booster in a closed system unless the system is equipped with properly sized control devices. Such devices include the use of properly sized and located pressure relief valves, compression tanks, pressure control, temperature controls and flow controls as appropriate. If the system does not include these devices, consult the responsible engineer or architect before making pumps operational.

2.5.2 After hydrotesting, drain plugs are removed, to facilitate system drainage, placed in a cloth bag and secured to the unit. Drain plugs shall be reinstalled prior to filling the system with fluid. Inspect all unit piping connections. Joints may also become loose during transit due to vibration and shock. All joints are to be checked for tightness. Flanged joints should be checked for proper torque of all flange bolts prior to filling the system with fluid.

CAUTION: Failure to reinstall drain plugs, check all joints for tightness and flange bolts for proper torque could result in leaks and/or flooding.

FAILURE TO FOLLOW THESE INSTRUCTIONS COULD RESULT IN PROPERTY DAMAGE AND/OR MODERATE PERSONAL INJURY.

2.5.3 Make all necessary system piping connections. Be aware that connecting dissimilar metals to the headers can lead to corrosion damage due to galvanic corrosion. The rate of corrosion is dependant on various factors some of which are; the potential between the dissimilar metals, electrolyte conductivity, geometry and area of the metals. Dielectric connections are recommended between dissimilar metals at the header connection. Be sure to eliminate any pipe strain on the unit. Support all pipes independently by use of pipe hangers near the unit. DO NOT ATTEMPT TO FORCE THE SUCTION OR DISCHARGE LINES INTO POSITION. Refer to assembly drawing for customer piping connections.

2.5.4 The maximum suction pressure shall not exceed 150 psi. Dead head pressure plus suction pressure shall not exceed 175 psi.

2.5.5 As a rule, ordinary wire or band hangers are not adequate to maintain alignment. It is very important to provide a strong, rigid support for the suction line. A saddle hanger is recommended.

2.5.6 For critical installations, equipment for absorbing expansion and vibration should be installed at the inlet and outlet connections of the unit.

2.5.7 Eccentric increasers can be used in the suction pipe line when increasing the pipe size, with straight sides of increaser on top to eliminate air pockets.

2.5.8 On an open system with a suction lift, a foot valve of equal or greater area than the pump suction is recommended. Prevent clogging by using a strainer at the suction inlet next to the foot valve. The strainer should have an area three times that of the suction pipe. Provisions must be made to prime the pump suction piping on start up. Do not start the pump unless all suction piping is full of water.

2.6 MISCELLANOUS CONNECTIONS

2.6.1 Hydro-Pneumatic Tank (optional): The tank is supplied mounted on a separate base for ease of handling, unit installation and space considerations. Mount the tank adjacent to the unit. A union connection is provided to allow quick connection to the unit. The tank is intended to maintain system pressure due to minor system leaks and periods of low demand.

2.6.2 Pre-charge the Hydro Pneumatic tank prior to filling the system. The tank should be air charged to the pump restart pressure minus 1 psi. If the tank is located above the booster, the precharge pressure is calculated by pump restart pressure minus tank elevation above pressure booster (psi) minus 1 psi.

2.6.3 For tanks supplied by others, refer to appendix E for tank installation.

2.7 LUBRICATION

2.7.1 Before starting, all pumps and motors should be checked for proper lubrication.

2.8 WIRING

DANGER: Electrical shock hazard. Inspect all electrical connections prior to powering the unit. Wiring connections must be made by a qualified electrician in accordance with all applicable codes, ordinances, and good practices.

FAILURE TO FOLLOW THESE INSTRUCTIONS COULD RESULT IN SERIOUS PERSONAL INJURY, DEATH, AND/OR PROPERTY DAMAGE.

2.8.1 Refer to the controller instruction manual for electrical connection, set-up and troubleshooting.

2.9 POWER WIRING

2.9.1 The Control Panel is designed to operate at a specific voltage as indicated on the control panel nameplate. Verify proper transformer primary wiring per the job-specific wiring diagram. Check power leads in accordance with wiring diagram enclosed in control cabinet. The voltage tolerance is +10%/-10%.

2.10 ANALOG SIGNAL WIRING

2.10.1 If installing the panel on an existing system, twisted pair shielded cable (#22 AWG, Belden type 8762, Alpha #2411 or equal) should be installed for the DC control wiring. The shield must be terminated in the control panel. Do not connect the shield at the other end of the cable! Insulate the shield so that no electrical connection is made at the other end of the cable. A twisted pair of #22 AWG conductors (Belden 8442 or equal) can be used in place of shielded cable. The cable length must be limited to 3000 feet for #22 AWG wire.

2.11 PRESSURE TRANSMITTER WIRING (4-20 mA Analog Signals)

2.11.1 (Optional) A pressure transmitter, if supplied with the booster unit, is installed at the discharge header. Otherwise, a pressure transmitter is supplied loose. It is recommended that the sensor be installed in the zone furthest away or at the most critical zone. Refer to wiring diagram for exact terminal locations.

2.12 DIFFERENTIAL PRESSURE SWITCH PIPING AND WIRING

2.12.1 (Optional) Differential pressure switches are available to sense the increase in pressure between the pump suction and discharge gauge taps that is used to determine whether a pump is running. The switch is wired normally closed to the control panel. Refer to wiring diagram for exact terminal locations. (Differential pressure switch may require field calibration.) Ref-3.6.1.

2.13 LOW SUCTION PRESSURE

2.13.1 (Optional) Low suction pressure switch is available and intended to stop pump operation when an insufficient pump suction condition exists. The switch is wired normally closed to the control panel. Refer to wiring diagram for exact terminal locations.

SECTION 3 - START UP

3.1 PUTTING THE UNIT INTO SERVICE

3.1.1 After package is installed and foundation bolts are tightened, check pump alignment. Refer to specific pump Installation, Operation & Maintenance manual for alignment procedures.

3.1.2 Fill system with fluid after reading the cautions in the piping connection section of this manual.

3.1.3 Vent all high points in the piping system to removed trapped air.

3.1.4 Before starting all pumps and drivers should be checked for proper lubrication.

3.1.5 Piping should be clean and flushed prior to operation.

CAUTION: Seal Damage may occur. Do not run pumps dry. Fill and vent the pump volute prior to operation.

FAILURE TO FOLLOW THESE INSTRUCTIONS COULD RESULT IN PROPERTY DAMAGE AND/OR MODERATE PERSONAL INJURY.

WARNING: Rotating shafts can catch loose clothing. Do not operate the pump without all guards in place.

FAILURE TO FOLLOW THESE INSTRUCTIONS COULD RESULT IN SERIOUS PERSONAL INJURY, DEATH, AND/OR PROPERTY DAMAGE.

3.1.6 PUMP ROTATION, 3 PHASE MOTORS ONLY

3.1.7 With the disconnect switch engaged to the "ON" position, momentarily start and stop each motor. Observe the pump shaft rotation.

3.1.8 If incorrect, turn the main disconnect off and interchange any two wire leads leaving the starter overload block and going to the motor.

DANGER: High Voltage 3 phase power can kill. Disconnect and lockout power prior to servicing unit.

FAILURE TO FOLLOW THESE INSTRUCTIONS COULD RESULT IN SERIOUS PERSONAL INJURY, DEATH, AND/OR PROPERTY DAMAGE.

3.1.9 Unit is now ready for operation.

3.2 ADJUSTMENTS

3.2.1 Final adjustments on the following adjustable devices shall be made to match exact system requirements.

3.3 THERMAL RELIEF VALVE

3.3.1 A thermal relief valve is installed on the discharge header to prevent potentially dangerous thermal pressure buildup. The valve automatically opens on temperature increase and closes on temperature decrease. This valve acts as a safety device and should never be removed or plugged. It is factory set to open and discharge when the water temperature in the discharge header reaches 125°F. The 3/8" NPT opening of this valve shall be piped to a floor drain in accordance with local codes.

3.3.2 To raise the valve opening point, turn the adjustment screw counter-clockwise; to lower the valve opening point, turn the screw clockwise. The closing point is non adjustable, approximately 3 to 5º F below opening point.

3.3.3 To flush valve manually, insert a screwdriver under each side of the lower spring guide. Pry both guide and spring away from body to open valve.

3.3.4 After long periods of operation, valve seat and disc may become worn or pitted, allowing leakage through valve in closed position. Internal parts can be replace if desired.

3.4 PRESSURE REDUCING VALVE (PRV)

3.4.1 The PRV is used to maintain a desirable pressure at the discharge header. The PRV is preset at the factory to the exact system requirements. If further adjustments are necessary refer to the PRV instruction manual.

3.5 High PRESSURE PRV (If Required)

3.5.1 On systems where the system pressure reaches above 135 psi a high pressure PRV is required to protect the thermal relief valve from exceeding its pressure rating. The high pressure PRV has an adjustable range from 30 to 300 psi and is manufacturer set at 60 psi. No further adjustments are recommended.

3.6 DIFFERENTIAL PRESSURE SWITCH (Optional)

3.6.1 The differential pressure switch has a range from 1/2-36 psid and is manufacturer set at 18 psid. It is recommended that the setting be adjusted to 2 psi less than the minimum pump differential pressure to avoid nuisance alarms. The minimum pump differential pressure is equal to the pump discharge pressure at minimum speed minus suction pressure. To adjust the setting, remove the cover. To decrease the operating point, face the switch, place a flat bladed screwdriver in the slots of the main range adjustment nut and rotate from left to right. For further information refer to switch instruction manual supplied with the unit.

3.7 LOW SUCTION PRESSURE SWITCH (Optional)

3.7.1 Manufacturer set at 40 psi. It is recommended that the setting be adjusted to 10 psi below rated suction pressure. To adjust the setting, remove the cover. Turn the reference dial to the desired set point by aligning setting on dial with the dowel pin.

SECTION 4 - MAINTENANCE

4.1 MAINTENANCE (PHYSICAL)

4.1.1 Refer to specific component IOM for maintenance information.

4.1.2 Mechanical - A Series 1531 pump was lubricated at the factory. Future lubrication should be according to the motor manufacturer's instructions.

4.1.3 A Series 1510 pump requires regreasing after every 2500 hours of operation or every six months whichever occurs first. Lubricate motor per motor manufacturer's instruction.

4.1.4 If there is a danger of freezing, drain the pump. Inspect pump and system piping regularly.

4.1.5 For leaky seals or gaskets and loose or damaged components, replace or repair as required.

For more instruction on the B&G pumps see the following manuals: 1510 (IOM Part #P81673) or 1531 (IOM Part #P81567).

APPENDIX A

SYSTEM PIPING AND UNIT INSTALLATION - FINAL CHECK LIST

____ 1. Is the unit base properly leveled, grouted and secured?

____ 2. Are all lubrication points properly lubricated?

____ 3. Is the outlet side of the high temperature regulating valve connected to the drain with tubing or pipe size 3/8" or greater?

____ 4. Is the shut-off valve to the pressure transmitter(s) open?

____ 5. Is the shut-off valve to the pump suction open?

____ 6. Is the shut-off valve on the discharge line open?

____ 7. Is the bypass valve, if used, closed? This valve may be left open if a check valve is installed in series with it.

____ 8. Are the stop cocks for the check feature on the PRV open? They must never be completely closed during normal operation. Throttle cock if check slamming is noted.

____ 9. Is the piping properly supported so as to prevent strains on unit?

____ 10. Is the system, including the pumps and PRV's, purged of debris and air?

____ 11. Is the Hydro Pneumatic tank charged properly? The tank must be empty of water when checking the air charge.

CAUTION: Seal Damage may occur. Do not run pumps dry. Fill and vent the pump volute prior to operation.

FAILURE TO FOLLOW THESE INSTRUCTIONS COULD RESULT IN PROPERTY DAMAGE AND/OR MODERATE PERSONAL INJURY.

____ 12. Are the bleed valves at the high temperature valve header open?

APPENDIX B

ELECTRICAL WIRING AND CONTROL SETTINGS - FINAL CHECK LIST

____ 1. Does the feeder line voltage correspond to the unit voltage? Check the unit nameplate or motor terminal connection.

____ 2. Are the feeder wires correctly sized for the load?

WARNING: Electrical shock hazard. Inspect all electrical connections prior to powering the unit. Wiring connections must be made by a qualified electrician in accordance with all applicable codes, ordinances, and good practices.

FAILURE TO FOLLOW THESE INSTRUCTIONS COULD RESULT IN SERIOUS PERSONAL INJURY, DEATH, AND/OR PROPERTY DAMAGE.

____ 3. Are the fuses correctly sized? They must not exceed 1.75 times the full load current of the motor. Usual sizing is 1.15 to 1.5 times the full load current.

____ 4. Is the unit properly grounded?

WARNING: Conduit grounds are not adequate. A separate ground wire must be attached to the ground lug provided in the enclosure to avoid potential safety hazards.

FAILURE TO FOLLOW THESE INSTRUCTIONS COULD RESULT IN SERIOUS PERSONAL INJURY, DEATH, AND/OR PROPERTY DAMAGE.

____ 5. Have all the power terminals in the control panel been checked for tightness? This is imperative since stranded wires tend to "flow" and become loose after initial installation.

____ 6. Are motor overloads set properly? Set the overloads to FLA as a minimum and SF x FLA as a maximum.

DANGER: High Voltage 3 phase power can kill. Disconnect and lockout power prior to servicing unit.

FAILURE TO FOLLOW THESE INSTRUCTIONS WILL RESULT IN SERIOUS PERSONAL INJURY, DEATH, AND/OR PROPERTY DAMAGE.

____ 7. Is the pump rotation correct?

APPENDIX C

PROCEDURE FOR FIELD BALANCING PRESSURE REDUCING VALVE

COMBINATION PRESSURE REDUCING AND CHECK VALVE

Item	Name	Primary Function
1	Strainer	Prevents orifice from clogging
2	Check Valve	Prevents backflow from top of diaphragm when pumping stops.
3	Orifice	Provides metered water flow to top-side of diaphragm.
4	Opening Speed Flow Control	Dampens pressure fluctuations (slow opening).
5	CRD	Pilot PRV.
6	Gauge	Optional location for system pressure gauge.
7	Cock	Adjustment for rate of closure (non-slam).
8	Check Valve	Prevents backflow from top of diapgragm during normal operation.
9	Vent	Bleeds air from top of diaphragm.
10	Diaphragm	Divides inlet and outlet pressures.

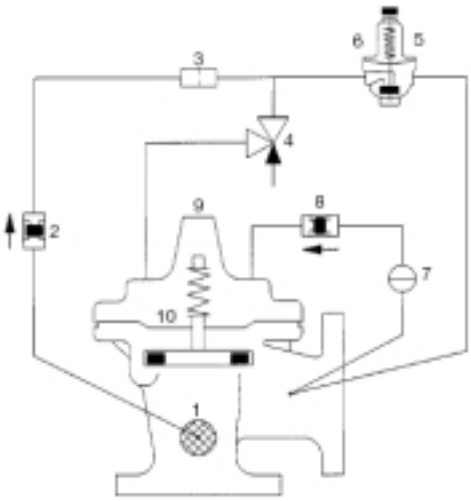

Figure 2

1.0 Pressure Reducing valve (PRV) Adjustment

1.1 The pressure reducing valves are "factory set". If needed, the following items should be checked first before any attempt is made to change the setting:
a) Does the desired system pressure correspond to the pressure indicated on the nameplate?
b) Is the suction pressure equal to or higher than the pressure indicated on the nameplate?
c) Is the demand (GPM) within the capacity indicated on the nameplate?
d) Has the PRV been properly vented?

1.2 Any deviation from the above conditions will prevent the unit from operating at the factory (nameplate) settings.

1.3 To adjust the PRV place the pump in manual operation per Technologic 500X instruction manual. With the pump now running, slowly close the main gate valve downstream of the discharge header allowing a trickle of water to flow through it. Read the system pressure on the display. It should read 3 or 4 psi higher than the desired system pressure. If not, remove the protective cap on the pilot control valve and loosen the jam nut on the adjusting stem of the PRV. Slowly turn the stem clockwise to increase the delivery pressure and counter clockwise to decrease pressure. (Note that a pilot valve furnished for a 20 to 300 psi range will change the main valve setting approximately 28 psi for each full turn of the adjusting screw.) Set the screw so the system display reads 3 to 4 psi higher than the desired system pressure.

1.4 Open the gate valve fully. If feasible, draw between 50 to 80% of the designed pump capacity to recheck valve setting. The display should now read the desired system pressure. Tighten jam nut and replace cap.

1.5 Repeat the above procedure for all pump and valve combinations as required.

1.6 The CV Flow Control Valve (opening speed control) may require field adjustment if pressure hunting occurs. Normal setting of the valve is from 4 to 7 turns open. Never open more than 8 turns.

APPENDIX D

TROUBLESHOOTING COMBINATION PRESSURE REDUCING AND CHECK VALVES

1.0 System Pressure Higher than Desired Set Point

1.1 Primary Causes
- a) Insufficient pressure on top side of diaphragm.
- b) Leakage through main valve seat.
- c) Pressure build-up due to thermal expansion, such as caused by volumetric expansion of the water in a heater connected to the system side of the PRV.
- d) Inaccurate system pressure signal.

1.2 Tests and Remedies (see Figure 2 for item numbers)
- a) Install gauge, install on CRD (Item 6), if necessary.
- b) Vent air from air vent (Item 9) and from other high points of PRV trim. Valve cover bolts may have to be loosened on some units with PRV mounted horizontally.
- c) Check CRD set point adjustment.
- d) Close stop cock (Item 7) in check line. If PRV now operates properly, clean or replace adjacent check valve (Item 8).
- e) Inspect CRD (Item 5) disc and seat for proper seating.
- f) Inspect strainer (Item 1) that the screen is clean.
- g) Inspect orifice (Item 3) that it is not clogged.
- h) Plug outlet side of CRD. If main valve closed tight, the problem most likely is in the CRD. Replace same. If the main valve does not close tight, disassemble it for inspection. Check for scored seat.

2.0 System Pressure Lower than Desired Set Point

2.1 Primary Causes
- a) Excessive pressure on top side of diaphragm.
- b) Suction pressure below design conditions (check nameplate on panel door for design conditions).
- c) Desired system pressure is higher than design condition (check panel nameplate).
- d) Flow Rate is greater than design condition.
- e) Inaccurate system pressure signal.

2.2 Tests and Remedies (see Figure 2 for item numbers)
- a) Install gauge, install on CRD (Item 6), if necessary.
- b) Vent air from air vent and all high points.
- c) CRD disc guide or yoke binding.
- d) Check motor amps. If greater than full load amps (motor nameplates), flow rate may be greater than design.

DANGER: Troubleshooting live control panels exposes personnel to hazardous voltages. Electrical troubleshooting must only be done by a qualified electrician.

FAILURE TO FOLLOW THESE INSTRUCTIONS COULD RESULT IN SERIOUS PERSONAL INJURY, DEATH, AND/OR PROPERTY DAMAGE.

- e) Leak into upper diaphragm chamber. Close stop cock (Item 7) and remove a connection between the flow control valve (Item 4) and the PRV valve cover. Plug the flow control side. Open pump suction valve and start pump. If water emits from the valve cover plate, there is a leak passing the diaphragm into the upper chamber.
- f) Remove valve cover plate for inspection. Remove "cancerous" buildups which may prevent diaphragm from lifting fully. Check for binding of valve stem assembly.
- g) Opening speed control valve (Item 4) clogged in restricted flow mode (out of PRV valve cover).
- h) Orifice (Item 3) missing. The orifice fitting identical in appearance to a flare to MPT adapter, therefore may have been inadvertently replaced or misplaced during valve service.
- i) Check pump discharge pressure. Does it correspond to the TDH curve?

3.0 System Pressure Slow to Recover from Under Pressure to Set Point

3.1 Primary Causes
- a) Pressure above the diaphragm is not being removed quickly enough.
- b) Mechanical binding in main PRV or CRD pilot valve.
- c) Excessive suction supply line pressure drop.

3.2 Remedies (see Figure 2 for item numbers)
- a) Any of the items of 2.2 may be a contributing factor.
- b) Readjust flow control valve (Item 4) to less restrictive setting, turn counter clockwise.

NOTE: Forcing the stem too far CCW will shear the stem snap ring and cause the stem to blow out. Recommend that the stem be initially turned CW, noting the number of turns required to seat the stem, then backing it out CCW a few more turns than the original setting. The maximum CCW setting is about 9 turns.

4.0 System Pressure Overshoots Greatly and Slow to Recover to Set Point

4.1 Primary Causes
- a) Pressure above the diaphragm is not being applied soon enough.
- b) Mechanical binding in main PRV or CRD pilot valve.
- c) Leaky seat in main PRV or CRD valves.
- d) Excessive suction supply line pressure drop.
- e) System side surge (water hammer) due to sudden closure of a quick opening valve.
- f) Strainer (Item 1) clogged.

4.2 Remedies (see Figure 2 for item numbers)
- a) Any of the items of 1.2 may be contributing factors.
- b) Install larger orifice (Item 3).

5.0 PRV Does Not Close (Check) on Pump Shut Down

5.1 Primary Causes

a) Insufficient pressure on top of diaphragm.
b) Leak through main valve seat or diaphragm assembly.

5.2 Remedies (see Figure 2 for item numbers)

a) Stop cock (Item 7) closed preventing pressure from reaching valve cover.
b) Leaking check valve (Item 2).
c) To determine whether leak is in main valve seat or diaphragm assembly:
   1. Disconnect line between flow control valve (Item 4) and valve cover.
   2. Plug flow control side.
   3. Install pressure gauge in valve cover.
   4. Remove vent plug in pump volute to drain inlet side of PRV.
   5. Apply pressure to top side of diaphragm by opening shutoff valve on outlet side of PRV.
   6. Read gauge pressure.
   7. Close stop cock (Item 7).

If gauge pressure fails, there is a leak in the diaphragm assembly. This test, however, does not indicate whether the seat is also leaking.

6.0 PRV Slams Shut on Pump Shut Down

6.1 Primary Causes

a) Too rapid buildup of pressure on top of diaphragm.
b) Main valve assembly binding.
c) Check valve (Item 2) sticking open momentarily

6.2 Remedies (see Figure 2 for item numbers)

a) Throttle stop cock (Item 7).
   NOTE: Closing this stop cock will completely prevent PRV from functioning as a check valve.

b) Vent air from PRV (see 1.2b).

APPENDIX E

HYDRO-PNEUMATIC TANK FIELD INSTALLATION

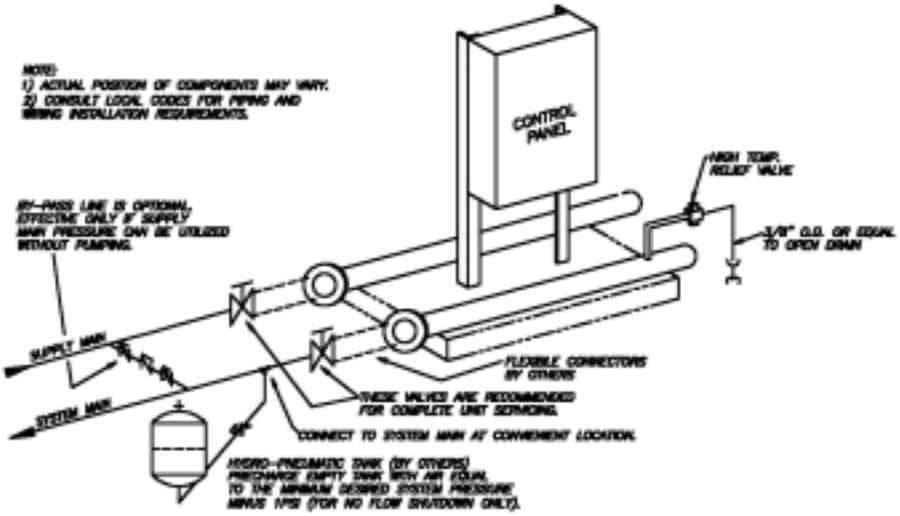

Figure 3

xylem
Let's Solve Water

Xylem Inc.
10661 Newkirk Street
Dallas, TX 75220
Phone: (469) 221-1200
Fax: (214) 357-5861
www.xyleminc.com/brands/bellgossett