INSTRUCTION MANUAL
P86109
REVISION D

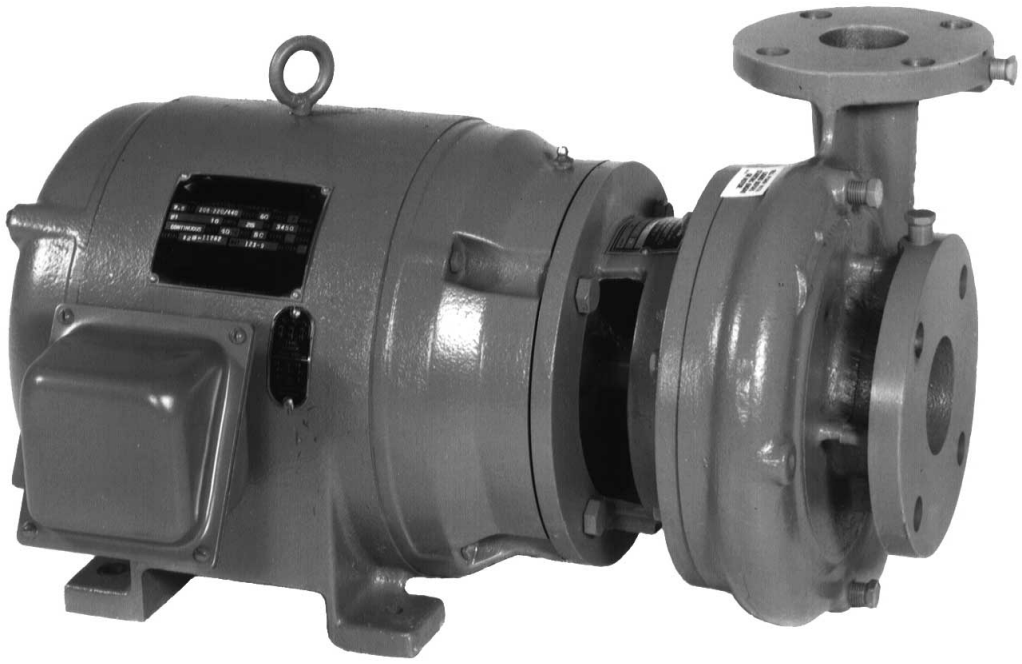

INSTALLER: PLEASE LEAVE THIS MANUAL FOR THE OWNER'S USE.

Close Coupled Centrifugal Pumps

Bell & Gossett
a xylem brand

DESCRIPTION

This centrifugal pump is a close coupled pump which features – high efficiency, rugged construction, foot mounted motor. These features make installation, operation and service easy to perform.

WARNING: This product can expose you to chemicals including Lead, which is known to the State of California to cause cancer or birth defects or other reproductive harm. For more information go to: www.P65Warnings.ca.gov.

PUMP APPLICATION

This centrifugal pump's bronze fitted construction make it ideal with service with the following liquids: fresh water, general pumping and benign liquids.

SAFETY INSTRUCTIONS

This safety alert symbol will be used in this manual and on the pump safety instruction decals to draw attention to safety related instructions. When used the safety alert symbol means ATTENTION! BECOME ALERT! YOUR SAFETY IS INVOLVED! FAILURE TO FOLLOW THE INSTRUCTIONS MAY RESULT IN A SAFETY HAZARD.

Your pump should have the following safety instruction decals located approximately as shown. If the decals are missing or are illegible contact your local representative for a replacement.

Additional Safety Requirements:

1. Electrical connections to be made by qualified Electrician in accordance with all National, State and Local codes.
2. Motor must have properly sized starter with properly sized heaters to provide overload and undervoltage protection.
3. If pump, motor or piping are operating at extremely high or low temperatures, guarding or insulation is required.
4. The maximum working pressure of the pump is listed on the pump nameplate, do not exceed this pressure.

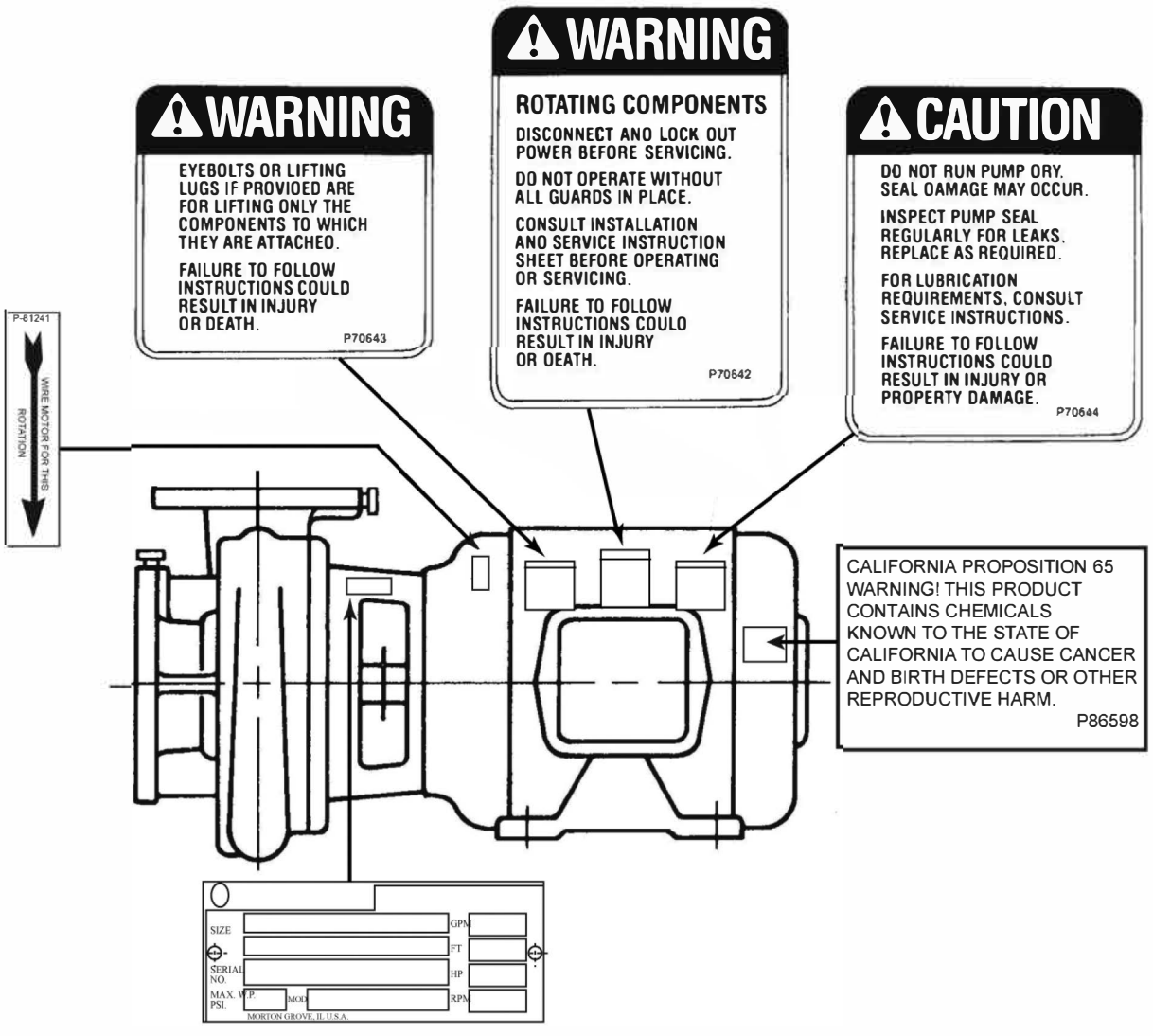

ADDITIONAL SAFETY REQUIREMENTS:

ELECTRICAL SAFETY:

WARNING: Electrical Shock Hazard
Electrical connections to be made by a qualified electrician in accordance with all applicable codes, ordinances, and good practices.
Failure to follow these instructions could result in serious personal injury or death, or property damage.

WARNING: Electrical Overload Hazard
Three phase motors must have properly sized heaters to provide overload and undervoltage protection. Single phase motors have built-in overload protectors.
Failure to follow these instructions could result in serious personal injury or death, or property damage.

THERMAL SAFETY:

WARNING: Extreme Temperature Hazard
If pump, motor, or piping are operating at extremely high or low temperatures, guarding or insulation is required.
Failure to follow these instructions could result in serious personal injury or death, or property damage.

MECHANICAL SAFETY:

WARNING: Unexpected Startup Hazard
Disconnect and lockout power before servicing.
Failure to follow these instructions could result in serious personal injury or death, or property damage.

WARNING: Excessive System Pressure Hazard
The maximum working pressure of the pump is listed on the nameplate, do not exceed this pressure.
Failure to follow these instructions could result in serious personal injury or death, or property damage.

WARNING: Excessive Pressure Hazard
Volumetric Expansion
The heating of water and other fluids causes volumetric expansion. The associated forces may cause failure of system components and release of high temperature fluids. This will be prevented by installing properly sized and located compression tanks and pressure relief valves. Failure to follow these instructions could result in serious personal injury or death, or property damage.

IMPORTANT
Do not install and operate your pump in closed systems unless the system is constructed with properly sized safety devices and control devices. Such devices include the use of properly sized and located pressure relief valves, compression tanks, pressure controls, temperature controls, and flow controls as appropriate. If the system does not include these devices, consult the responsible engineer or architect before making pumps active.

PUMP LOCATION

Locate the pump so there is sufficient room for inspection, maintenance and service. If the use of a hoist or tackle is needed, allow ample head room.

WARNING: Falling Objects Hazard
Eyebolts or lifting lugs, if provided, are for lifting only the components to which they are attached.
Failure to follow these instructions could result in serious personal injury or death, or property damage.

If lifting of the entire pump is required, do so with slings placed under the pump as shown in Figure 4.

The best pump location for sound and vibration absorption is on a concrete floor with sub soil underneath. If the pump location is overhead, special precautions should be undertaken to reduce possible sound transmission, consult a sound specialist.

If the pump is not on a closed system, it should be placed as near as possible to the source of the liquid supply, and located to permit installation with the fewest number of bends or elbows in the suction pipe.

The installation must be evaluated to determine that the Net Positive Suction Head Available (NPSHA) exceeds the Net Positive Suction Head Required (NPSHR), as stated by the pump performance curve.

FIG. 4

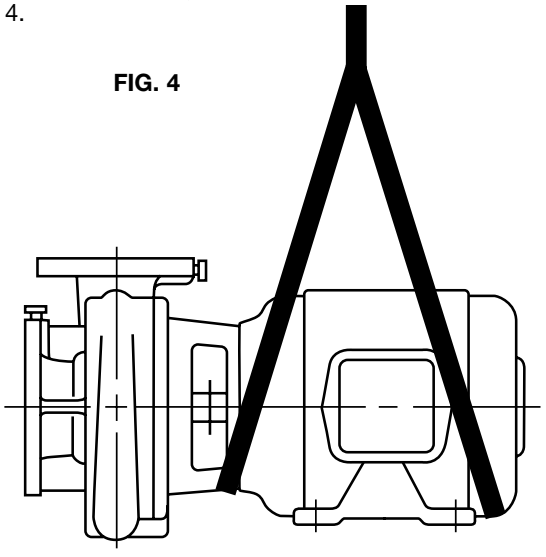

INSTALLATION

This pump is built to provide years of service if installed properly and attached to a suitable foundation. A base of concrete weighing 2½ times the weight of the pump is recommended. (Check the shipping ticket for pump weight.)

If possible, tie the concrete pad in with the finished floor.

To facilitate easy servicing, some type of expansion fitting should be utilized. The female portion should be inserted into a suitable hole in the floor so that its top surface is flush with the floor surface. Thus, when the hold-down bolts are removed, the motor can be removed by sliding it back from the pump. (See Figure 5)

FIG. 5

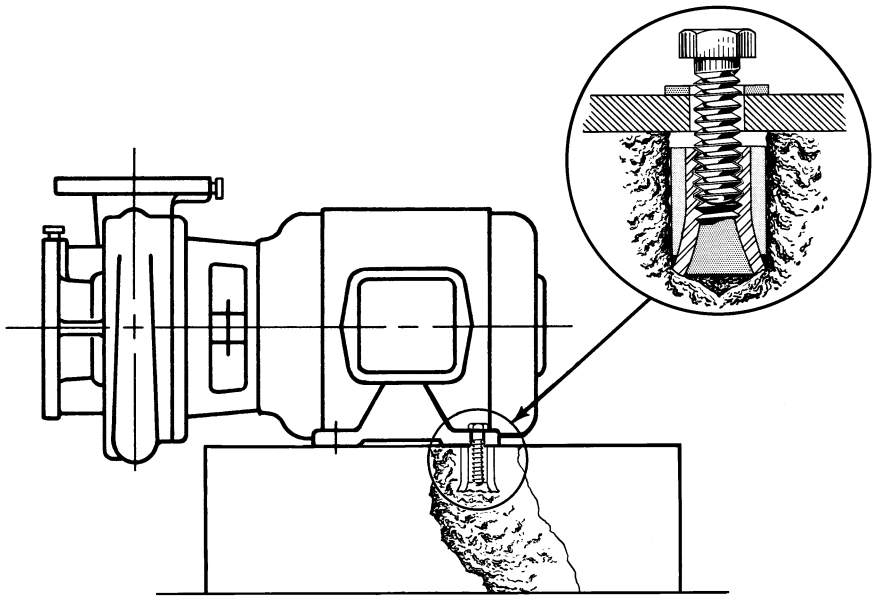

ROTATION

Pump rotation is clockwise when viewed from back of the motor. An arrow is provided to show direction of rotation.

PIPING

Always install a section of straight pipe between the suction side of the pump and first elbow. This reduces turbulence of the suction by straightening out the flow of liquid before it enters the pump. The length should be equal to five times the diameter of the pipe.

Be sure to eliminate any pipe-strain on the pump. Support the suction and discharge pipes independently by use of the pipe hangers near the pump. Line up the vertical and horizontal piping so that the bolt-holes in the pump flanges match the bolt-holes in the pipe flanges. DO NOT ATTEMPT TO SPRING THE SUCTION OF DISCHARGE LINES INTO POSITION. Bearing wear will result if suction or discharge lines are forced into position. The code for Pressure Piping (A.S.A.B.31.1) lists many types of supports available for various applications.

As a rule, ordinary wire or band hangers are not adequate to maintain alignment. It is very important to provide a strong, rigid support for the suction and discharge lines.

Where considerable temperature changes are anticipated, fittings for absorption expansion should be installed in the system in such a way as to avoid strain on the pump.

On an open system with a suction lift, use a foot-valve of equal or greater area than the pump suction piping. Prevent clogging by using a strainer at the suction inlet next to the foot-valve. The strainer should have an area three times that of the suction pipe with a mesh hole diameter of no less than ¼".

When using an isolation base, flexible piping should be used on both the suction and discharge sides of the pump.

NOTES

1. The pipeline should have isolation valves around the pump and have a drain valve in the suction pipe.
2. When installing the suction and discharge connection to a threaded pump housing the use of PTFE tape sealer or a high quality thread sealant is recommended.

PUMP INSULATION

When insulating your pump, ensure that the coverplate vent slots and the motor remain uncovered.

LUBRICATION

Your pump has been lubricated at the factory, future lubrication should be in accordance with the motor manufacturers instruction.

GENERAL INFORMATION

1. Keep the motor properly lubricated.
2. When there is a danger of freezing, drain the pump.
3. Inspect pump regularly for leaky seals or gaskets and loose or damaged components. Replace or repair as required.

FIG. 6

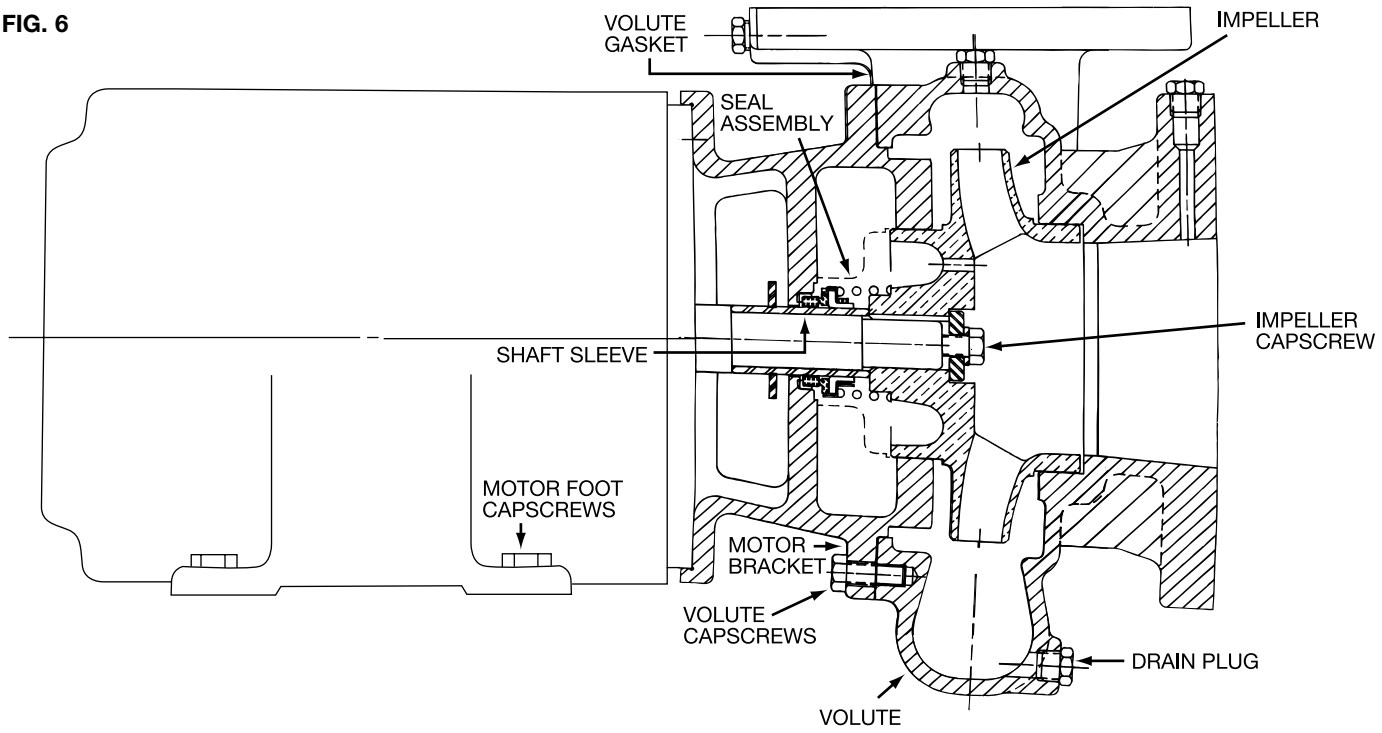

PUMP WITH STANDARD MECHANICAL SEAL

SERVICE INSTRUCTIONS

WARNING: Unexpected Startup Hazard
Disconnect and lock out power before servicing. Failure to follow these instructions could result in serious personal injury or death.

1. Close valves on suction and discharge sides of pump. (If no valves have been installed, it will be necessary to drain the system.)

CAUTION: Extreme Temperature Hazard
Check surfaces for extreme temperatures, allow pump temperatures to reach acceptable level before proceeding. Open drain valve, do not proceed until liquid stops coming out of drain valve. If liquid does not stop flowing from drain valve, isolation valves are not sealing and should be repaired before proceeding. After liquid stops flowing from drain valve leave drain valve open and continue. Remove the drain plug located on the bottom of the pump volute. Do not reinstall plug or close drain valve until reassembly is completed.
Failure to follow these instructions could result in injury or property damage.

2. Remove motor foot capscrews. Loosen volute capscrews, do not remove them. Use capscrews in the jack screw holes. Start to remove the pump assembly from the volute.

CAUTION: Make certain the internal pressure is relieved before continuing.
Failure to follow these instructions could result in injury or property damage.

3. Remove seal flushing tube, if used.

   Remove the volute capscrews and remove the pump assembly from the volute.

4. Remove the impeller capscrew, lock washer and washer. Remove the impeller.
5. Remove the rotating portion of the seal, use a screwdriver to loosen the rubber ring.
6. Remove the seal insert along with the insert gasket.
7. Thoroughly clean the shaft sleeve and the coverplate seal cavity. Inspect for surface damage like pitting, corrosion, nicks or scratches. Replace if necessary.
8. Lubricate the shaft sleeve and coverplate seal cavity with soapy water. (Do not use petroleum lubricant.) Install a new cup gasket and a new seal insert with indentation side down into the cup.
9. Slide a new rotating seal assembly onto the shaft sleeve. With a screwdriver push on the top of the compression ring until the seal is tight against the seal insert. Install seal spring.
10. Install impeller, impeller washer, lock washer and capscrew, then tighten capscrew (per torque chart).
11. Install new volute gasket then install pump assembly into volute. Tighten volute capscrews (per torque chart). Install seal flushing tube, if used. Install motor foot capscrews and tighten. Install drain plug, close drain valve.
12. Open isolation valves, inspect pump for leaks, if not leaking return pump to service.

Capscrew Type	Head Marking	CAPSCREW TORQUE (FOOT-POUND) Capscrew Diameter								
		1/4	5/16	3/8	7/16	1/2	5/8	3/4	7/8	1
SAE Grade 2		6	13	25	38	60	20	190	210	300
Brass Stainless Steel	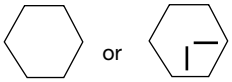	4	10	17	27	42	83	130	200	300
SAE Grade 5		10	20	35	60	90	180	325	525	800

DEALER SERVICING

If trouble occurs that cannot be rectified contact your local representative. He will need the following information in order to give you assistance.

1. Complete nameplate data of pump and motor.
2. Suction and discharge pipe pressure gauge readings.
3. Ampere draw of the motor.
4. A sketch of the pump hook-up and piping.

xylem
Let's Solve Water

Xylem Inc.
8200 N. Austin Avenue
Morton Grove, Illinois 60053
Phone: (847) 966-3700
Fax: (847) 965-8379
www.xylem.com/bellgossett

Bell & Gossett is a trademark of Xylem Inc. or one of its subsidiaries.
© 2019 Xylem Inc. P86109D January 2019