Bell & Gossett
a xylem brand

INSTRUCTION MANUAL
DN0154
REVISION D

Hoffman Specialty®
Vented Condensate Units
Series HC™ and HS™

SERIES HS™ with Optional Panel & Equipment

SERIES HC™ with Optional Panel & Equipment

INSTALLER: PLEASE LEAVE THIS MANUAL FOR THE OWNER'S USE.

SAFETY INSTRUCTIONS

This safety alert symbol will be used in this manual and on the unit safety instruction decals to draw attention to safety related instructions. When used, the safety alert symbol means ATTENTION! BECOME ALERT! YOUR SAFETY IS INVOLVED! FAILURE TO FOLLOW THESE INSTRUCTIONS MAY RESULT IN A SAFETY HAZARD.

If the decals as noted below are missing or are illegible contact your local B&G representative for a replacement.

1. Electrical connections to be made by qualified Electrician in accordance with all National, State and Local codes.
2. Motor must have properly sized starter with properly sized heaters to provide overload and undervoltage protection.
3. If pump, motor or piping are operating at extremely high or low temperatures, guarding or insulation is required.
4. Operating personnel should be trained in the operation of condensate return units.

(2) All Units
DN0483 (Small) - DN0484 (Large)

(2) All Units
DN0485 (Small)
DN0486 (Large)

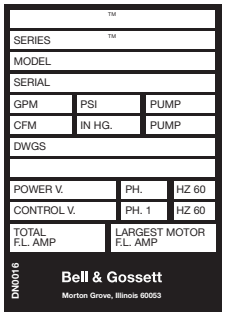

DN0116
Units with Panel

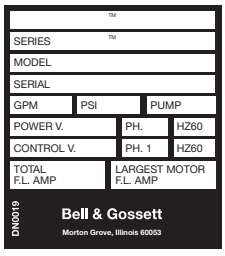

DN0019
Units Less/Panel

P70644
All Units

INSTALLATION AND DESCRIPTION

(Vented Condensate Units)

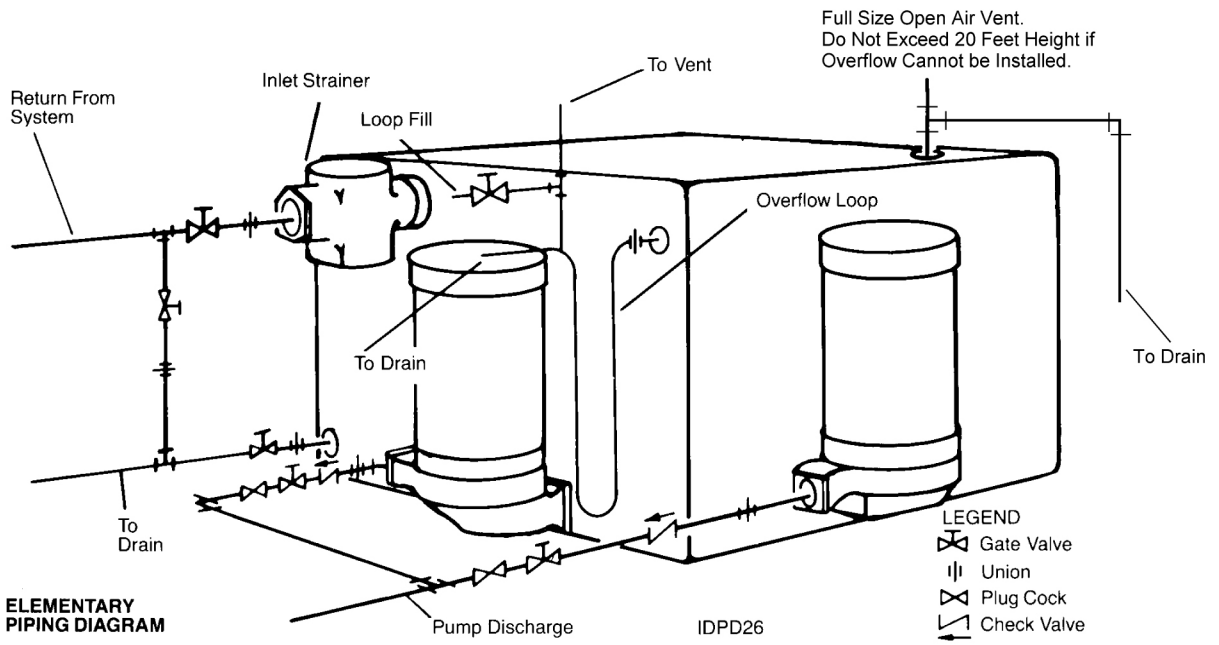

DESCRIPTION

Pumps are float operated to return accumulated condensate to a boiler feed tank.

Receivers are non-code cast iron or steel.

WARNING: EXPLOSIBLE
Do not pressurize receiver. Isolate receiver during leak test. Do not plug overflow. Do not restrict vent opening to atmosphere. Open valves slowly. Failure to follow these instructions could result in serious injury or death.

PRELIMINARY INSPECTION
Assure that there is no shipping damage.

Assure that nameplate ratings agree with job specifications and actual conditions.

HANDLING
Use care in installing unit.

CAUTION: UNIT LIFTING EYE
Use unit lifting eyes only to lift unit as shipped from factory. Unit must be empty and disconnected from pipes, anchors and other restraints. Use proper rigging procedures. Failure to follow these instructions could result in injury or property damage.

LOCATION
Place unit for easy access to all parts. Allow adequate space for servicing. Check ambient conditions.

NOTICE / TEMPERATURE LIMITS
Motors are designed to operate in 104°F. (40°C) max. ambient. Insulate or ventilate as required.

PIPING (General)
Pipe the unit per the Elementary Piping Diagram. Locate and support piping so as to not load the pump discharge.

CAUTION: NOT A CHEMICAL PUMP
Inject boiler feed compounds from chemical feed tank into boiler feed piping – never into condensate tank. Failure to follow these instructions could result in injury or property damage.

PIPING (Returns)
Gravity return lines from system should be properly pitched down to unit inlet. Returns must also be trapped to prevent steam entry into the unit. An inlet basket strainer is recommended.

PIPING (Vent)
Install a vent pipe to atmosphere. Pipe to be size of vent port on unit. Do not restrict or reduce vent opening or exceed 20 feet vertical height unless an overflow connection is provided.

PIPING (Overflow)
Pipe overflow port to drain using an overflow loop when condensate temperature will exceed 200°F. (93°C).

FLOAT SWITCHES & MECHANICAL ALTERNATORS
Floats are locked in place to prevent damage during shipment. Remove shipping locks. Check factory settings. Floats and mechanical alternators are adjustable for various levels of operation. The lead pump should start with tank 3/4 full and shut off at 2" or more above pump inlet. Lag pump should start before the tank overflows. Settings should avoid “short cycling” of the pump.

ELECTRICAL WIRING & CONTROLS
Connect power wiring per NEC. Recheck nameplate vs. specifications and conditions. All single phase motors have internal thermal protection.

WARNING: HIGH VOLTAGE ELECTRICITY
Disconnect and lock out power before connecting or servicing unit. Failure to follow these instructions could result in serious injury or death.

Three phase motors must use starters with properly sized overload relays. Overload relays furnished are designed for manual reset.

PUTTING THE UNIT INTO SERVICE

1. Assure that the unit is piped in accordance with instructions on page 2.

WARNING: EXPLOSIBLE
Do not pressurize receiver. Isolate receiver during leak test. Do not plug overflow. Do not restrict vent opening to atmosphere. Open valves slowly. Failure to follow these instructions could result in serious injury or death.

2. Isolate tank before performing any system leak test. Do not pressurize the tank as part of the leak test. Failure to do this can result in serious injury or death.
3. Check floats and alternators for free operation.
4. Check power leads in accordance with wiring diagram enclosed in control cabinet (when furnished).

WARNING: HIGH VOLTAGE
Disconnect and lock out power before connecting or servicing unit. Failure to follow these instructions could result in serious injury or death.

5. Install drain plugs.
6. Fill receiver half full of water to prime pump(s) and prevent possible damage to pump seals. Avoid freezing conditions after unit receiver has been filled.
7. Check for proper rotation of all three phase motors. Rotation must be clockwise looking down on the motor as indicated by directional arrow on pump casting. If pump runs backwards, interchange two wires (3 phase only).

CAUTION: DO NOT REVERSE
Reverse operation can cause extensive damage to pumps. Jog the motor to test for direction of rotation. Failure to follow these instructions could result in injury or property damage.

8. Throttle plug cock in discharge line until pressure at pump (while pump is discharging) approaches pump rated pressure. Tighten plug nut to secure adjustment.

CAUTION: DO NOT RUN DRY.
SEAL DAMAGE MAY OCCUR.
Inspect pump seal regularly for leaks. Replace as required. Failure to follow these instructions could result in injury or property damage.

9. Remove start-up label (below) from panel (if applicable) after complying with instructions.

ELECTRICIAN/INSTALLER/OPERATOR

REMOVE AND DESTROY THIS TAG AFTER —
1. ASSURING THAT ALL PUMPS ROTATE CLOCKWISE PER ARROWS CAST ON VOLUTES. (JOG PUMP MOMENTARILY TO TEST – INTERCHANGE ANY TWO MOTOR POWER WIRES TO REVERSE 3PH MOTORS.)
2. ASSURING THAT SHIPPING LOCKS HAVE BEEN REMOVED FROM ALL FLOAT SWITCHES.

10. If possible, observe operation thru several cycles.

OPERATION AND MAINTENANCE

Operators must be familiar with all sections of this manual to understand the operation of the unit.

Hot water, steam and electricity can be hazardous.

SAFETY INSTRUCTIONS
SEE COVER OF THIS MANUAL

WARNING: EXPLOSIBLE
Do not pressurize receiver. Isolate receiver during leak test. Do not plug overflow. Do not restrict vent opening to atmosphere. Open valves slowly. Failure to follow these instructions could result in serious injury or death.

WARNING: HIGH VOLTAGE
Disconnect and lock out power before connecting or servicing unit. Failure to follow these instructions could result in serious injury or death.

Check motor nameplate for any lubrication requirements. Pumps require no lubrication.

NOTICE / AUTO RESTART

Single phase motors will restart automatically after thermal overload protector trips.

Overload thermal relays in starters must be reset manually.

A properly installed unit should function unattended for long periods of time. Periodic checks to assure proper operations are highly recommended. Refer to trouble shooting section when necessary.

A variety of control options are available and are furnished in accordance with user specifications. Refer to wiring diagrams (when furnished) to determine control switch settings.

CAUTION: SUBSEQUENT DAMAGE
A unit showing symptoms of possible problems (overflow, noise, leaks, vibrations, continual operation, etc.) must be corrected immediately. Failure to follow these instructions may result in full liability for subsequent injury or property damage.

The inlet strainer (when furnished) is intended to protect the pump and system. Periodic cleaning should be included in the maintenance schedule. Check frequently in new systems.

GAGE GLASS MAINTENANCE (Vented Systems)

Clean gage glass as required using commercial glass cleaner. Dilute muratic acid may be used if required (observe handling precautions). Never clean gage glass with wire brushes, scrapers or harsh abrasives. Check exterior only.

Do not reuse gage glass or packing or seals. Immediately replace glass which is broken, cracked, chipped, scratched or otherwise damaged. Inspect periodically with a bright concentrated light. Anything which glistens and catches the fingernail or any star-shaped or crescent-shaped mark which glistens is cause for replacement. Any gage glass which appears cloudy or roughened and will not respond to cleaning procedures should be replaced.

When replacing gage glass, use new packings specified for this use. Install glass with sufficient end clearance for expansion (keep glass to metal clearance at each end) and tighten nuts just enough to avoid leakage (do not over tighten).

TROUBLE SHOOTING PROCEDURES

All units are thoroughly tested at the factory before shipment. They should operate satisfactorily without further adjustment if properly installed and providing they have not been damaged by rough handling in transit. If system or unit performance is not satisfactory, refer to the following check list.

Pump Will Not Start

1. The power supply has been interrupted, disconnect switch is open, or selector switch is improperly positioned.
2. Incorrect voltage for motor. Check voltage and wiring with motor characteristics.
3. Incorrect starter coil for power supply.
4. The overload relays and the starter have tripped out and must be reset. Ambient temperature may be too high.
5. Check pump controls or other controls for proper operation.
6. Wiring to control cabinet is incorrect or connections are loose.
7. The strainer is dirty thus retarding flow. Clean periodically.

Pump Runs Continuously

1. Pump is running backward. Rotation of three phase motors may be corrected by interchanging any two of the three wires. Rotation should be clockwise looking down on motor.
2. Steam traps are blowing through causing condensate to return at excessive temperatures. This may reduce the capacity of pump below its rating, depending on the unit and type of pump furnished. Traps should be repaired or replaced.
3. The total required pressure at the pump discharge is greater than the pressure for which the pump was designed. Check the total pressure which includes atmospheric pressure, the friction head and the static head.
4. A valve in the discharge line is closed or throttled too tightly. Check valve is installed backwards.
5. The impeller eye is clogged.
6. Pump is too small for system.

Condensate Pump is Noisy

1. The pump is working against a lower pressure than designed for. While pump is discharging, adjust plug cock in discharge line until pressure at pump approaches pump rated pressure.
2. Excessive condensate temperature. Correct system conditions.
3. Magnetic hum or bearing noise in motor. Consult motor manufacturer's authorized service station nearest unit location.
4. Starter chatters. Trouble is caused by low line voltage, poor connections, defective starter coil, or burned contacts.
5. Pump is running backward. Rotation of three phase motors may be corrected by interchanging any two of the three wires. Rotation should be clockwise looking down on motor.

The System is Noisy

1. Banging in the steam mains is usually caused by steam "imploding" in condensate lying in low points in lines. These problems can be eliminated by dripping low points, properly supporting the pipe, or by increasing the pitch of the lines.
2. Improper dripping of the steam mains and risers; where there is a rise in the steam main, or where it branches off into a riser, a drip trap must be installed in the drain line.
3. The piping is too small to drain properly.
4. A defective trap is holding condensate in steam supply line.

DEALER SERVICING

If trouble occurs that cannot be rectified, contact your local B&G representative. He will need the following information in order to give you assistance.

1. Complete nameplate data of pump and motor.
   SEE RATING NAMEPLATE.
2. Suction and discharge pipe pressure gauge readings.
3. Ampere draw of the motor.
4. A sketch of the pump hook-up and piping.

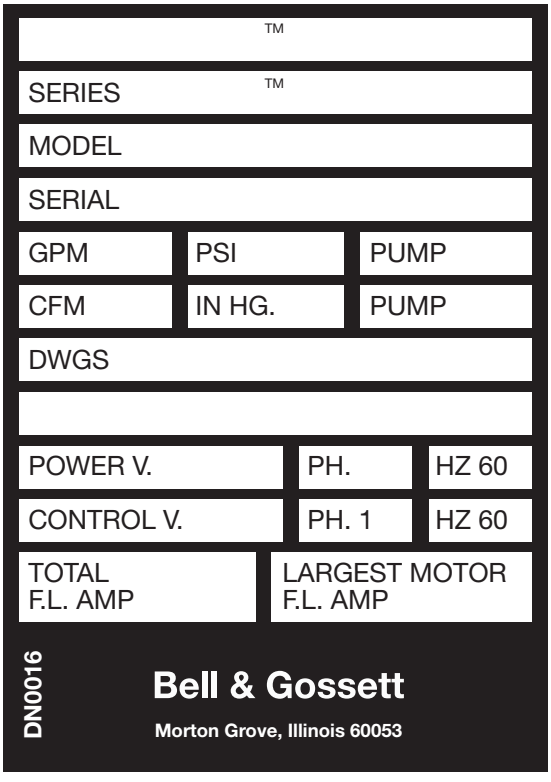

PUMP SERVICE INSTRUCTIONS FOR 609PF (WATCHMAN®) CENTRIFUGAL PUMPS

These close coupled vertical centrifugal pumps are equipped with mechanical seals. If system has not been properly cleaned prior to installation of pump, foreign matter such as dirt, pipe scale, core sand, etc. may clog the impeller and damage the seal. A strainer is recommended in return line to pump. *Pump must not be operated dry.* Seals may be damaged if operated without water present.

1. Close inlet line gate valve and operate pump momentarily to remove as much liquid as possible from pump. Close discharge line gate valve.

CAUTION: HOT SURFACES
Surfaces are hot when system is in operation. Do not touch hot receiver, let unit cool before servicing. Failure to follow these instructions could result in injury or property damage.

2. Shut-off and lock-out power.

WARNING: HIGH VOLTAGE
Disconnect and lock out power before connecting or servicing unit. Failure to follow these instructions could result in serious injury or death.

3. Disconnect wiring to motor.
4. Make sure unit is cool enough that pump can be handled safely. Open receiver drain to remove remaining liquid.
5. Loosen the motor to pump volute fasteners. Assure that pressure is relieved per caution note.

CAUTION: PRESSURIZED SYSTEM
Operating system may contain very hot water under pressure. Close inlet and open drains before servicing. When servicing, *loosen* screws and move components to assure pressure is relieved before *removing* screws. Keep drains open during servicing. Failure to follow these instructions could result in injury or property damage.

6. Remove four capscrews (7) holding pump case to motor and lift motor and impeller out of pump case.
7. Remove pump/motor assembly and place on work bench.
8. Hold top end of motor shaft with large screwdriver via screwdriver slot in shaft and back of impeller (counter-clockwise) with a rectangular bar or other flat tool inserted between the vanes of the impeller.
9. Remove the rotating part of the mechanical seal from the end of the shaft.
10. Remove seal holder (2) with stationary ceramic part of mechanical seal and cup rubber from the end of the shaft.
11. Remove stationary ceramic part of mechanical seal and cup rubber from recess in seal holder.
12. To install new seal, proceed as follows: Clean recess in seal holder thoroughly. Orient motor so that conduit opening on motor is to the left when looking at motor shaft. Replace seal holder on the face of the motor maintaining concentricity with motor face. Place new ceramic part of seal in the cup rubber over motor shaft and press firmly into recess of seal holder by hand, making certain both parts bottom evenly. If assembly cannot be bottomed with fingers place a wooden or cardboard tube over shaft onto ceramic and push into place. Using a clean, lint-free cloth, wipe the mating surfaces of the seal clean of any foreign matter. Moisten the carbon section of the rotating part of the seal and place onto shaft to seat against the ceramic. Place seal spring onto shaft.

FIG. 2
2DPF01

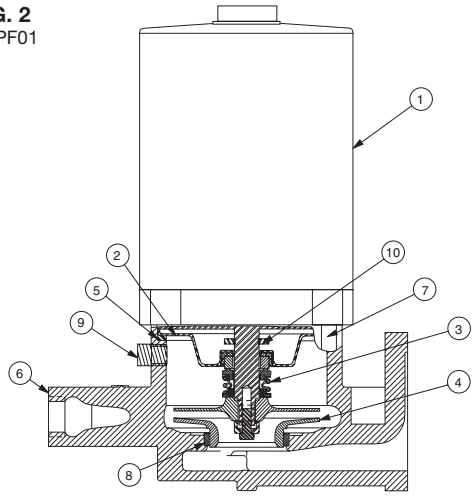

1. Motor
2. Seal Holder
3. Seal
4. Impeller
5. Gasket
6. Case
7. Capscrew (motor to volute)
8. Wear Ring
9. Pipe Plug
10. Slinger

13. Hold motor shaft as described in #8 and replace the impeller on the shaft (clockwise rotation) making sure it is tight.
14. Orient motor for pump reassembly with conduit opening to the left. When mounting the pump case, discharge should be 90˚ to the right of the conduit opening on motor. Use care to insure tight gasket fit to prevent water leakage.
15. Replace four capscrews (7). Tighten down capscrews evenly to avoid damage.
16. Reconnect pump bleed line (where applicable) and motor wiring.

CAUTION: DO NOT RUN DRY.
SEAL DAMAGE MAY OCCUR.
Inspect pump seal regularly for leaks. Replace as required. Failure to follow these instructions could result in injury or property damage.

17. Close drain and slowly open inlet valves. See warning.

WARNING: EXPLOSIBLE
Do not pressurize receiver. Isolate receiver during leak test. Do not plug overflow. Do not restrict vent opening to atmosphere. Open valves slowly. Failure to follow these instructions could result in serious injury or death.

18. Jog to check motor rotation. See caution.

CAUTION: DO NOT REVERSE
Reverse operation can cause extensive damage to pumps. Jog the motor to test for direction of rotation. Failure to follow these instructions could result in injury or property damage.

19. Observe operation thru several cycles.

PUMP SERVICE INSTRUCTIONS FOR CENTRIFUGAL PUMPS (EXCEPT WATCHMAN®/609)

Vertical mounting puts motor above floor dirt and water

Close coupled centrifugal pumps are designed for years of trouble free service. Units have mechanical shaft seals.

1. Close inlet gate valve and operate pump momentarily to remove as much liquid as possible from pump. Close discharge line gate valve.

> **CAUTION: HOT SURFACES**
> Surfaces are hot when system is in operation. Do not touch hot receiver, let unit cool before servicing. Failure to follow these instructions could result in serious injury or death.

2. Shut-off and lock out power.

> **WARNING: HIGH VOLTAGE**
> Disconnect and lock out power before connecting or servicing unit. Failure to follow these instructions could result in serious injury or death.

3. Make sure unit is cool enough that pump can be handled safely. Open drain to remove remaining liquid.
4. Carefully remove pump drain plug and bleed line. Wait for complete drainage.
5. Loosen the motor bracket to pump volute capscrews. Assure that the pressure is relieved per caution note.

> **CAUTION: PRESSURIZED SYSTEM**
> Operating system may contain very hot water under pressure. Close inlet and open drains before servicing. When servicing, *loosen* screws and move components to assure pressure is relieved before *removing* screws. Keep drains open during servicing. Failure to follow these instructions could result in injury or property damage.

6. Complete the removal of the hardware. Remove pump/motor assembly and place on work bench.
7. Remove self locking stainless steel capscrews and stainless steel washer (or self locking brass cap nut and washer) that secure the impeller in place.
8. To remove impeller from motor shaft proceed as follows:
   (1) Keyed Shafts. Remove impeller with gear puller or other means which will not damage impeller or bend motor shaft.
   (2) Threaded Shafts. Hold end of motor shaft opposite pump with large screwdriver or other suitable tool and back impeller off with a rectangular bar or other flat tool inserted between the vanes of the impeller.
9. Remove rotating part of seal from shaft, being careful not break carbon face.
10. Remove capscrews holding motor bracket to motor and remove bracket.
11. Remove stationary part of seal assembly, being careful not to chip or break ceramic seal.
12. To install seal proceed as follows:
   (1) Clean recess in bracket thoroughly. Coat recess and "rubber" portion of seat with soap solution. Press seat into recess firmly by hand making certain both parts bottom evenly. If seal cannot be bottomed with fingers place cardboard shipping disc on ceramic and force into place with flat tool.
   (2) Carefully place bracket in position on motor shaft without displacing ceramic seat and secure bracket to motor with capscrews.
   (3) Place motor vertically with pump end up. Do not attempt assembly of seal and impeller with shaft horizontal.

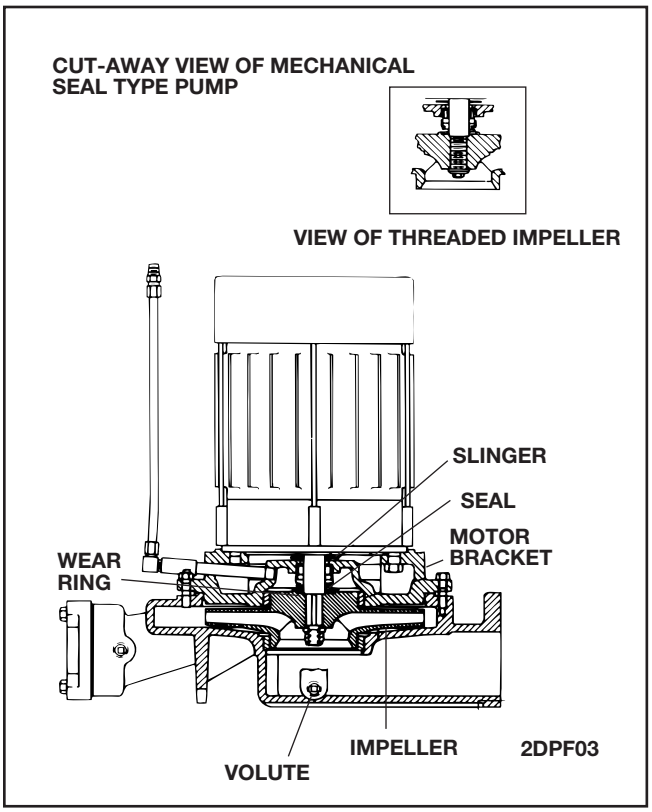

   (4) The "carbon" of rotating part of seal should not be loose. If it is, hold in place with grease. Using clean, lint free cloth, wipe mating surfaces perfectly clean. Soap shaft and push seal onto shaft so that carbon will contact ceramic seal. If spacer is required, use grease to cause spacer to adhere to bottom of seal after seal has been put on shaft. Be sure spacer is on larger diameter of shaft so that will not catch between shoulder and impeller.
13. Replace impeller on shaft. Replace stainless steel washer and secure impeller with capscrew or cap nut.
14. Place new gasket on pump volute and reassemble motor and pump subassembly on pump volute.
15. Reconnect pump bleed line and motor wiring.

> **CAUTION: DO NOT RUN DRY.**
> **SEAL DAMAGE MAY OCCUR.**
> Inspect pump seal regularly for leaks. Replace as required. Failure to follow these instructions could result in injury or property damage.

16. Close drain and slowly open inlet valves. See warning.

> **WARNING: EXPLOSIBLE**
> Do not pressurize receiver. Isolate receiver during leak test. Do not plug overflow. Do not restrict vent opening to atmosphere. Open valves slowly. Failure to follow these instructions could result in serious injury or death.

17. Jog to check motor rotation. See caution.

> **CAUTION: DO NOT REVERSE**
> Reverse operation can cause extensive damage to pumps. Jog the motor to test for direction of rotation. Failure to follow these instructions could result in injury or property damage.

18. Observe operation thru several cycles.

NOTES:

Xylem |'zīləm|

1) The tissue in plants that brings water upward from the roots;
2) a leading global water technology company.

We're 12,700 people unified in a common purpose: creating innovative solutions to meet our world's water needs. Developing new technologies that will improve the way water is used, conserved, and re-used in the future is central to our work. We move, treat, analyze, and return water to the environment, and we help people use water efficiently, in their homes, buildings, factories and farms. In more than 150 countries, we have strong, long-standing relationships with customers who know us for our powerful combination of leading product brands and applications expertise, backed by a legacy of innovation.

For more information on how Xylem can help you, go to www.xyleminc.com

xylem
Let's Solve Water

Xylem Inc.
8200 N. Austin Avenue
Morton Grove, Illinois 60053
Phone: (847) 966-3700
Fax: (847) 965-8379
www.bellgossett.com

Bell & Gossett is a trademark of Xylem Inc. or one of its subsidiaries.
© 2013 Xylem Inc. DN0154D April 2013