Bell & Gossett
a xylem brand

GIDELINES
A-635

Field Adjustment & Servicing of Valves and Coil Hook-Up Kit Components

WARNING: This safety alert symbol will be used in this bulletin to draw attention to safety related instructions. When used, the safety alert symbol means ATTENTION! BECOME ALERT! YOUR SAFETY IS INVOLVED! FAILURE TO FOLLOW THE INSTRUCTIONS MAY RESULT IN A SAFETY HAZARD.

Description
The P/T readout ports, drain valves, plugs, and other accessories found on Bell & Gossett balancing valves (such as Circuit Setter, Circuit Sentry, Optiflo, Circuit Setter Ultraset, MV, and ACL Low Flow valves), coil hook-up kit valves (such as UBV union ball valve, UBY union ball valve with Y-strainer, and UBYL low flow Y-strainer), and other components (such as UA union accessories and SH hoses) come pre-assembled with a leading industrial thread sealant, Loctite 567, and are tightened to appropriate levels. With that in mind, the following information should help to clarify questions regarding the adjustment or servicing of those components when required.

CAUTION: Installation and maintenance must be performed by a qualified professional. Service should not be performed on any valve in an active Hydronic loop. Before attempting to make any required adjustments, properly isolate and drain the branch loops that require service and allow the valves to reach a safe handling temperature and zero pressure condition. Use proper safety equipment including gloves, goggles, or similar tools to avoid contact with system fluids and common hazards. Failure to follow these instructions could result in personal injury and property damage.

Valve Accessories
(P/T Readout Ports, Drain Valves, Plugs, Extenders, Air Vents)
Any field adjustment of factory installed components will break the original thread seal and could cause leakage. This will necessitate the removal, cleaning, and resealing of those parts per the instructions below. Should any adjustment or servicing of P/T readout ports, drain valves, drain plugs, or other valve accessories be required, please take the following steps:

1. Completely remove the desired component from the valve.
2. Taking care not to damage any threads on the component or the valve, clean off all of the old thread sealant. Use a wire brush and gentle abrasion if necessary. Allow the valve and the component to dry.
Note: If the component or valve appears to have been damaged, replace it.
3. Starting with the second thread of the NPT male valve component, apply a 360° bead of Loctite 567 thread sealant/ lubricant as shown below. Follow Loctite handling precautions as noted on the product labeling.

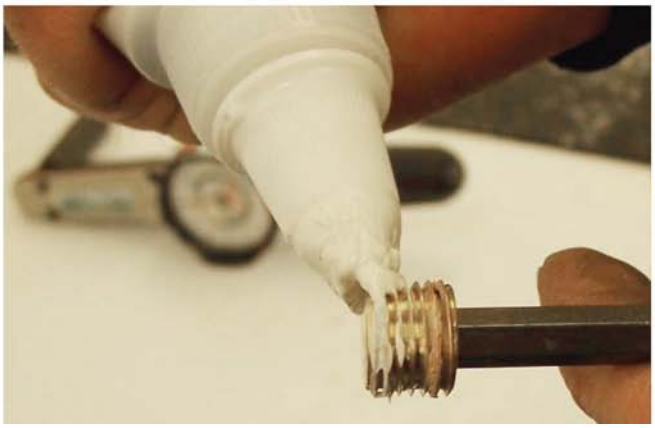

4. If Loctite 567 is unavailable, Xylem recommends RectorSeal No.5 pipe thread sealant for all non-glycol based applications, or any PTFE thread sealing tape. Be sure to follow the manufacturer specific handling precautions and application instructions as noted on the product labeling.
5. Thread component into valve until it is finger tight.
6. Apply torque to the following specification:

Component Size	Type	Torque
1/4" NPT	P/T Readout Port, Drain Valve, Air Vent, Plug, Extender	9.0 ft.-lbs + 3.0 ft.-lbs. / -0
1/2" NPT	Plug	9.0 ft.-lbs + 3.0 ft.-lbs. / -0
3/4" NPT	Plug	12.0 ft.-lbs + 4.0 ft.-lbs. / -0
1" NPT	Plug	12.0 ft.-lbs + 4.0 ft.-lbs. / -0

⚠ **NOTICE:** The use of thread sealants/lubricants on threads also provides lubricity. Over application of torque may cause damage to the valve port or component.

7. Properly assembled valve components will immediately seal to moderate pressure (100 PSI or less). For maximum pressure resistance, allow the Loctite 567 or RectorSeal No.5 thread sealant to cure for 24 hours. PTFE tape typically does not require curing to achieve maximum pressure resistance.

Hoses
Any field adjustment of factory installed hoses will break the original thread seal and could cause leakage. This will necessitate the removal, cleaning, and resealing of those parts per the instructions below.

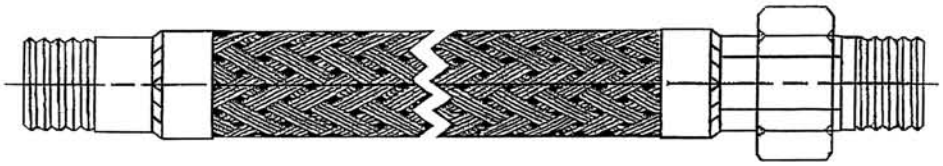

Should any servicing of hoses be required, please take the following steps:

1. Completely remove hose from valve or coil.
2. Taking care not to damage any threads on the hose or the valve, clean off all of the old thread sealant. Use a wire brush and gentle abrasion if necessary. Allow the valve and the component to dry.
Note: If the hose or valve appears to have been damaged, replace it.
3. Starting with the second thread of the NPT male hose end, apply a 360° bead of Loctite 567 thread sealant/lubricant. Follow Loctite handling precautions as noted on the product labeling.
4. If Loctite 567 is unavailable, Xylem recommends RectorSeal No. 5 pipe thread sealant for all non-glycol based applications, or any PTFE thread sealing tape. Be sure to follow the manufacturer specific handling precautions and application instructions as noted on the product labeling.
5. Thread hose into valve or coil until it is finger tight.
6. Tighten hose to the specification below. Range is given to achieve proper hose alignment.

Pipe Connection	Additional Turns From Finger Tight
1/2" NPT	1 – 1.5
3/4" NPT	1 – 1.5
1" NPT	1 – 1.5
1-1/4" NPT	1 – 1.5
1-1/2" NPT	1 – 1.5
2" NPT	1 – 1.5

NOTICE: The use of thread sealants/lubricants on threads also provides lubricity. Over application of torque may cause damage to the hose or valve port.

7. Properly assembled valve components will immediately seal to moderate pressure (100 PSI or less). For maximum pressure resistance, allow the Loctite 567 or RectorSeal No.5 thread sealant to cure for 24 hours. PTFE tape typically does not require curing to achieve maximum pressure resistance.

Drain Caps and Cartridge Caps
Occasionally, the drain cap of a UBY or UBYL Y-strainer valve may need to be disassembled to permit cleaning of the mesh strainer. Likewise, cartridges may need to be removed from Optiflo, Ultraset, Circuit Sentry, and ACL Low Flow valves for system commissioning or flow adjustment.

Any field adjustment of factory installed drain caps or cartridge caps will affect the compression of the seal present and could cause leakage. This will necessitate the removal, cleaning, and resealing of those parts per the instructions below. Should any servicing of cartridge caps or drain caps be required, please take the following steps:

1. Completely remove cap from valve. Take care not to damage the valve, cap threads, or o-ring or PTFE seals.
2. When performing maintenance on a UBY or UBYL drain cap, remove the ¼" NPT drain valve from the cap before removing the drain cap from the valve.
3. Perform necessary service on valve or system.

Note: If the valve or any of the components appear to have been damaged, replace them.

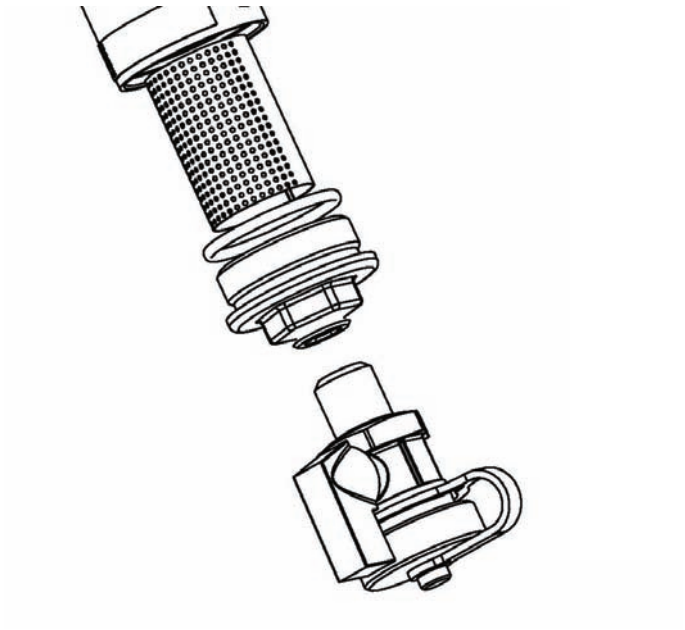

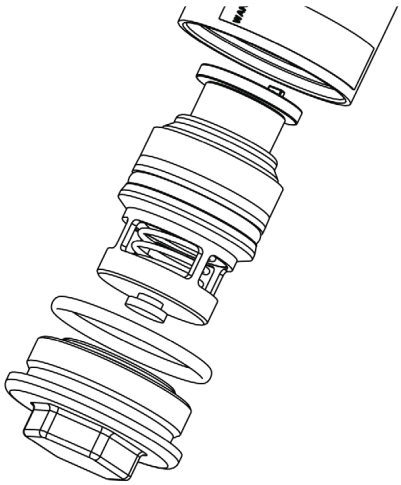

4. Make sure that the male threads of the cap and the female threads of the valve are clean and that there is no debris present.
5. Make sure that o-ring or PTFE seal is seated on the cartridge cap or drain cap.

NOTICE: Do not use any thread sealant or lubricant when assembling the cartridge or drain cap as it may prevent o-ring or PTFE seal from sealing properly.

6. Thread cap into valve until it is finger tight.
7. Tighten cap to specification below.

Component	Seal	Torque
Cartridge Cap – All Sizes	O-Ring	25.0 ft.-lbs + 7.0 ft.-lbs. / -0
Drain Cap – ½" and ¾" UBYL Valves	O-Ring	25.0 ft.-lbs + 7.0 ft.-lbs. / -0
Drain Cap – ½" and ¾" UBY Valves	PTFE Square Ring	25.0 ft.-lbs + 7.0 ft.-lbs. / -0
Drain Cap – 1" and 1-1/4" UBY Valves	PTFE Square Ring	32.0 ft.-lbs. +10.0 ft.-lbs. / -0
Drain Cap – 1-1/2" and 2" UBY Valves	PTFE Square Ring	60.0 ft.-lbs. +18.0 ft.-lbs / -0

8. If required, re-install drain valve with Loctite 567 following method described earlier in this bulletin. Follow Loctite handling precautions as noted on the product labeling.
9. If Loctite 567 is unavailable, ITT recommends RectorSeal No.5 pipe thread sealant for all non-glycol based applications, or any PTFE thread sealing tape. Be sure to follow the manufacturer specific handling precautions and application instructions as noted on the product labeling.

Loctite and Loctite 567 are registered trademarks of Henkel AG & Co. RectorSeal No.5 is a registered trademark of RectorSeal Corporation.

xylem
Let's Solve Water

Xylem Inc.
8200 N. Austin Avenue
Morton Grove, Illinois 60053
Phone: (847) 966-3700
Fax: (847) 965-8379
www.bellgossett.com