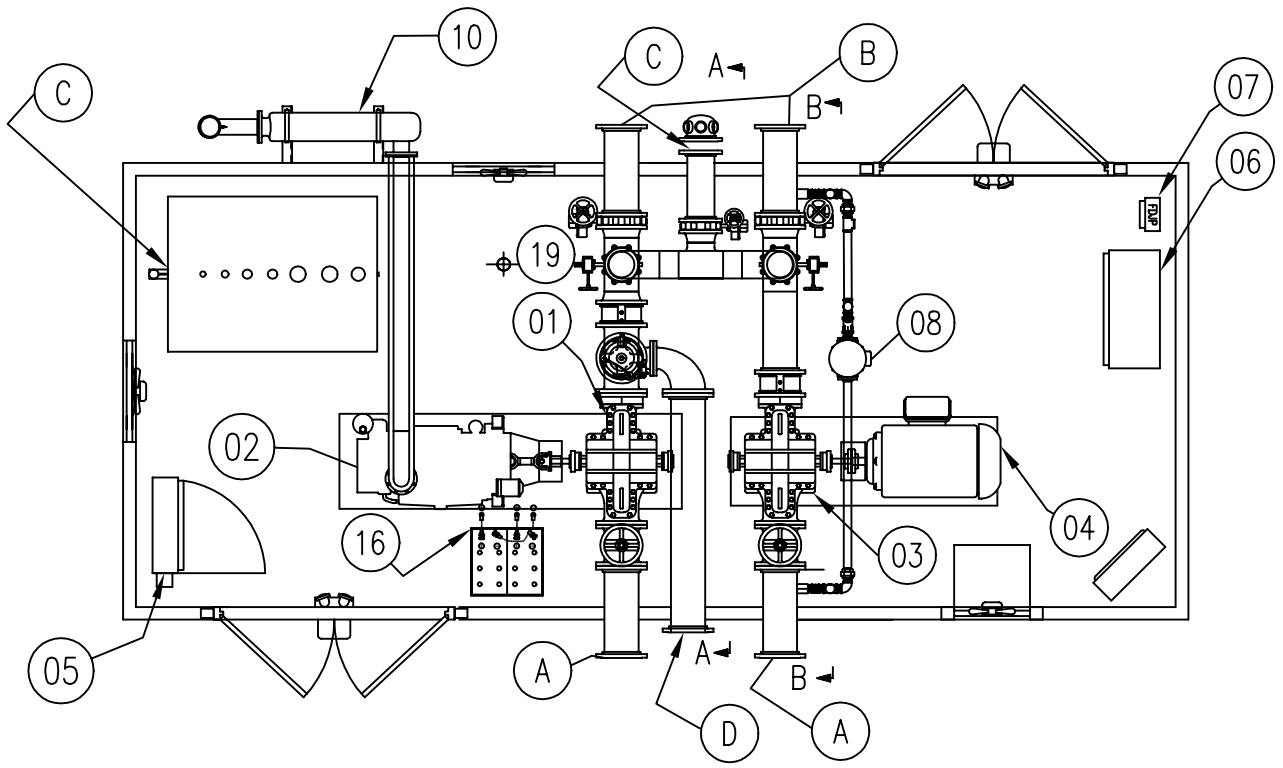

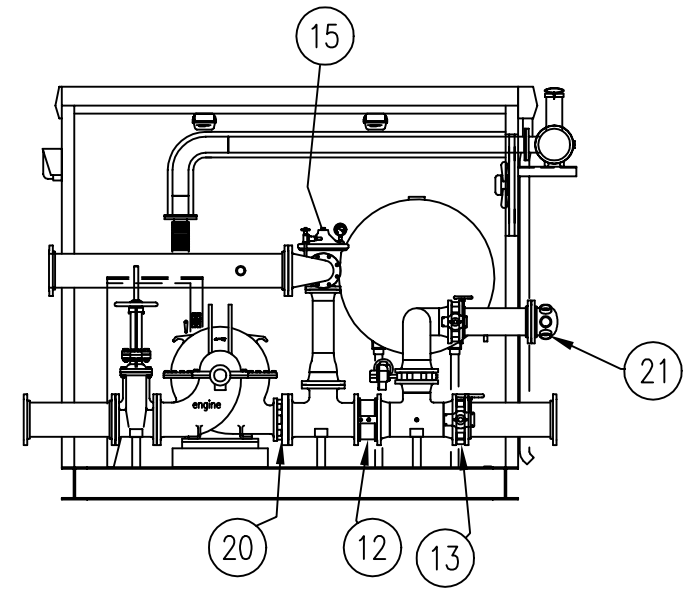

VIEW A–A

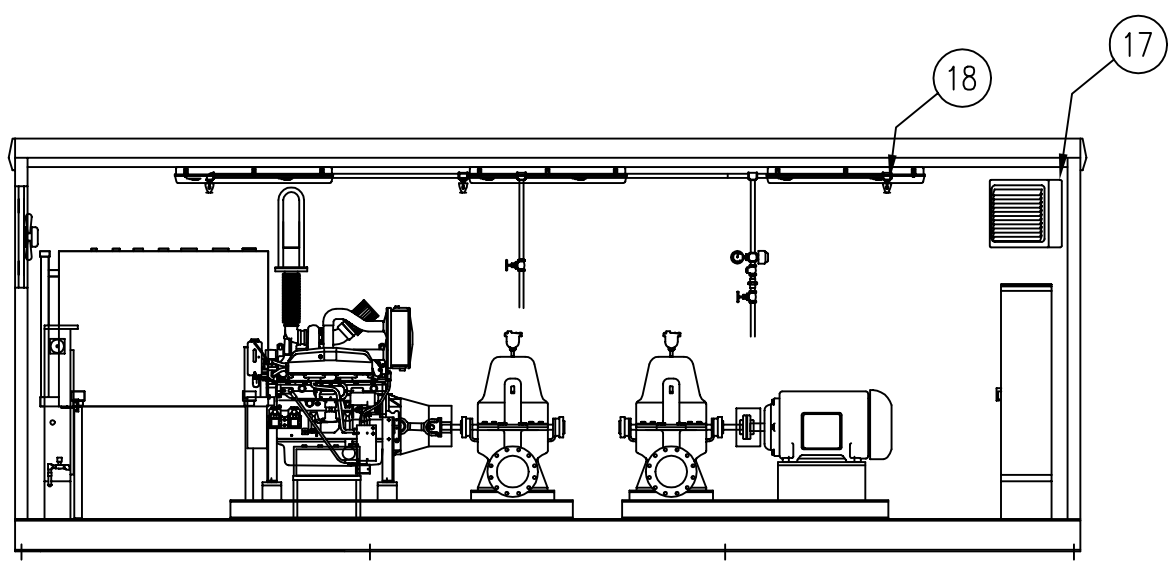

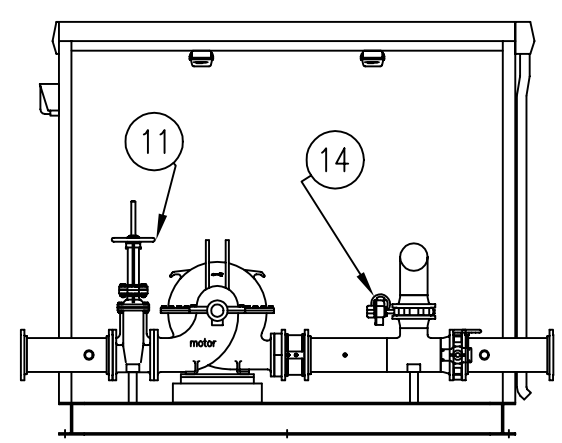

VIEW B–B

1) FIRE PUMP: ITT AC SERIES 8100
2) ENGINE
3) FIRE PUMP: ITT AC SERIES 8100
4) MOTOR
5) DIESEL FIRE PUMP CONTROLLER
6) ELECTRIC FIRE PUMP CONTROLLER
7) JOCKEY PUMP CONTROLLER
8) JOCKEY PUMP
9) FUEL TANK, DOUBLE WALL
10) EXHAUST SILENCER
11) OS&Y GATE VALVE
12) CHECK VALVE
13) BUTTERFLY VALVE WITH TAMPER SWITCH
14) BUTTERFLY VALVE WITH TAMPER SWITCH
15) RELIEF VALVE
16) BATTERY, RACK AND CABLES
17) ELECTRIC HEATER
18) STANDARD RESPONSE SPRINKLER HEAD
19) COMMON DRAIN
20) FLANGE ADAPTER
21) HOSE HEADER WITH 2 1/2" NPTF CONNECTION

NOTES:

1) CUSTOMER PIPING MUST BE SUPPORTED NEAR ALL INTERFACE CONNECTIONS TO ELIMINATE STRAIN.
2) ALL PIPING(STUFFING BOX, BALL DRIP VALVE, ENGINE RAW WATER COOLING, CASING RELIEF VALVE, SPRINKLER TEST/DRAIN) TERMINATES AT THIS LOCATION(ITEM 19)
3) FUEL TANK VENT PIPING SHIP LOOSE
4) HOSE HEADER AND VALVES SHIP LOOSE
5) MUFFLER AND OUTDOOR FITTINGS SHIP LOOSE.

CUSTOMER INTERFACE CONNECTIONS:

A) SUCTION : TWO–FLANGED
B) DISCHARGE: TWO–FLANGED
C) HOSE HEADER CONNECTION: FLANGED.
D) RELIEF VALVE DISCHARGE: FLANGED

8					4				
7					3				
6					2				
5					1	REMOVED OVERALL DIMENSION	10/06/00	JZ	
REVISION		DATE	BY	APP.	REVISION		DATE	BY	APP.

PROJECT NAME:
SKID MOUNTED SYSTEM
DUAL DRIVE, ENCLOSED

DWN.BY:	DATE:	CHKD.BY:	DATE:
RCS	05/10/00		

TOLERANCES UNLESS OTHERWISE SPECIFIED

DEC.:	FRAC.:	ANGLE:	SCALE:
± 0.25	± 1/4	±1/2°	1 : 66

PART NO.: 2MKT43

THIS DRAWING AND THE INFORMATION DEPICTED THEREIN IS THE PROPERTY OF BELL & GOSSETT. COPIES ARE ISSUED IN STRICT CONFIDENCE AND SHALL NOT BE REPRODUCED OR COPIED, OR USED AS THE BASIS FOR THE MANUFACTURE OR SALE OF PRODUCTS WITHOUT PRIOR WRITTEN PERMISSION OF BELL & GOSSETT.

AC PUMP
PACKAGED SYSTEMS GROUP
FLUID TECHNOLOGY CORPORATION
MORTON GROVE, ILLINOIS 60053